BRZ
ELECTRICAL WIRING DIAGRAM

	Section Code	Page
INTRODUCTION	A	2
HOW TO USE THIS MANUAL	B	3
TROUBLESHOOTING	C	12
ABBREVIATIONS	D	17
GLOSSARY OF TERMS AND SYMBOLS	E	18
RELAY LOCATIONS	F	20
ELECTRICAL WIRING ROUTING	G	38
SYSTEM CIRCUITS	H	62
GROUND POINT	I	426
POWER SOURCE (Current Flow Chart)	J	436
CONNECTOR LIST	K	448

A INTRODUCTION

This manual consists of the following 13 sections:

No.	Section	Description
A	INDEX	Index of the contents of this manual.
	INTRODUCTION	Brief explanation of each section.
B	HOW TO USE THIS MANUAL	Instructions on how to use this manual.
C	TROUBLE–SHOOTING	Describes the basic inspection procedures for electrical circuits.
D	ABBREVIATIONS	Defines the abbreviations used in this manual.
E	GLOSSARY OF TERMS AND SYMBOLS	Defines the symbols and functions of major parts.
F	RELAY LOCATIONS	Shows position of the Electronic Control Unit, Relays, Relay Block, etc. This section is closely related to the system circuit.
G	ELECTRICAL WIRING ROUTING	Describes position of Parts Connectors, Splice points, Ground points, etc. This section is closely related to the system circuit.
H	INDEX	Index of the system circuits.
	SYSTEM CIRCUITS	Electrical circuits of each system are shown from the power supply through ground points. Wiring connections and their positions are shown and classified by code according to the connection method. (Refer to the section, ”How to use this manual”). * Only wiring information for complete circuits is included.
I	GROUND POINT	Shows ground positions of all parts described in this manual.
J	POWER SOURCE (Current Flow Chart)	Describes power distribution from the power supply to various electrical loads.
K	CONNECTOR LIST	Describes the form of the connectors for the parts appeared in this book. This section is closely related to the system circuit.

This manual provides information on the electrical circuits installed on vehicles by dividing them into a circuit for each system.

The actual wiring of each system circuit is shown from the point where the power source is received from the battery as far as each ground point. (All circuit diagrams are shown with the switches in the OFF position.)

When troubleshooting any problem, first understand the operation of the circuit where the problem was detected (see System Circuit section), the power source supplying power to that circuit (see Power Source section), and the ground points (see Ground Point section).

When the circuit operation is understood, begin troubleshooting of the problem circuit to isolate the cause. Use Relay Location and Electrical Wiring Routing sections to find each part, junction block and wiring harness connectors, wiring harness and wiring harness connectors and ground points of each system circuit. Internal wiring for each junction block is also provided for better understanding of connection within a junction block.
Wiring related to each system is indicated in each system circuit by arrows (from__, to__). When overall connections are required, see the Overall Electrical Wiring Diagram at the end of this manual.

*The information in this manual is about the wire harnesses. Information about component and assembly parts is for reference, but in some cases this reference information might not be included or might differ from the actual vehicle. When inspecting or repairing a vehicle, refer to the relevant Repair Manual.

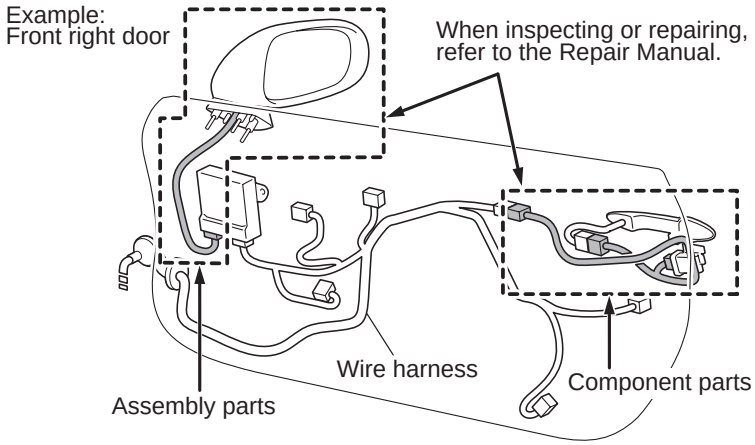

* The system shown here is an EXAMPLE ONLY. It is different to the actual circuit shown in the SYSTEM CIRCUITS SECTION.

[A]

Stop Light

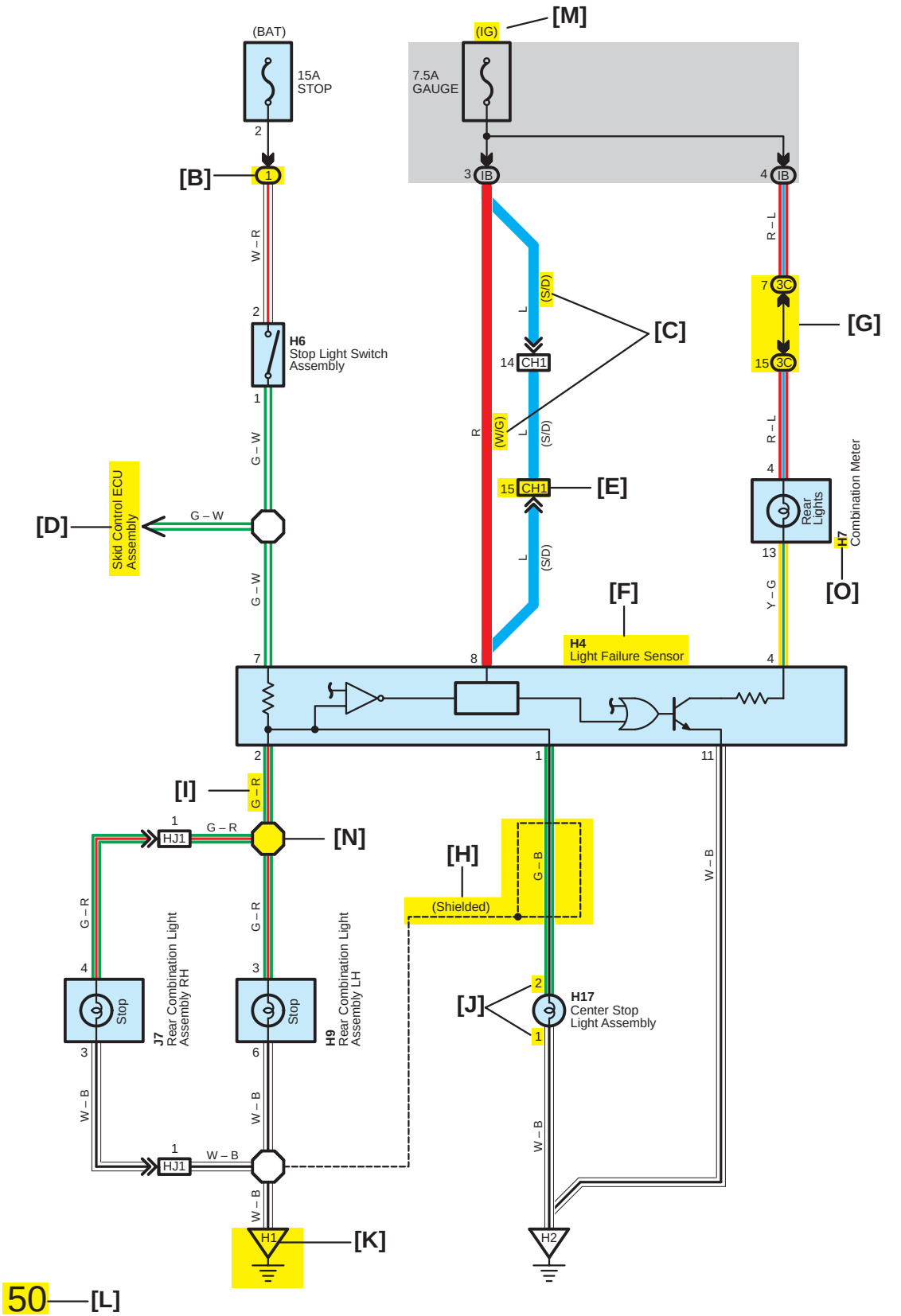

[A] : System Title

[B] : Indicates a Relay Block. No shading is used and only the Relay Block No. is shown to distinguish it from the J/B

Example: (1) Indicates Relay Block No.1

[C] : ( ) is used to indicate different wiring and connector, etc. when the vehicle model, engine type, or specification is different.

[D] : Indicates related system.

[E] : Indicates the code for the (male and female) connectors which are used to join two wire harnesses. The connector code consists of two alphabetical and one numerical characters.

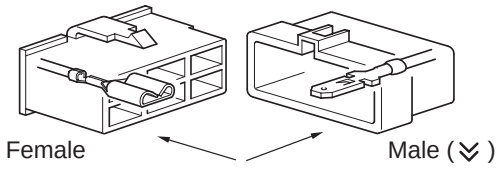

The first character of the connector code indicates the alphabetical code allocated to the wire harness which has the female connector, and the second shows that of the wire harness which has the male connector.
The third character indicates a serial number used to distinguish between the wire harness combinations in cases when more than one of the same combination of wire harnesses exist (e.g. CH1 and CH2).

Symbol (⩔) indicates the male terminal connector. Numbers outside connector codes indicate the pin numbers of both male and female connectors.

[F] : Represents a part (all parts are shown in sky blue). The code is the same as the code used in parts position.

[G] : Junction Block (The number in the circle is the J/B No. and the connector code is shown beside it). Junction Blocks are shaded to clearly separate them from other parts.

Example:

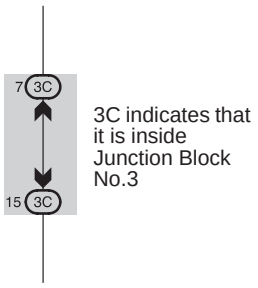

[H] : Indicates a shielded cable.

[I] : Indicates the wiring color.

Wire colors are indicated by an alphabetical code.

Copper wires

B = Black	W = White	BR = Brown
L = Blue	V = Violet	SB = Sky Blue
R = Red	G = Green	LG = Light Green
P = Pink	Y = Yellow	GR = Gray
O = Orange	BE = Beige	DG = Dark Gray

Aluminum wires

LA = Lavender

NOTICE: Do not splice into aluminum wires for power sources or signals.

The first letter indicates the basic wire color and the second letter indicates the color of the stripe.

Example: L – Y

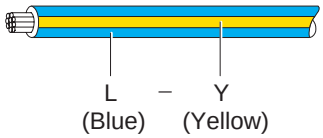

[J] : Indicates the pin number of the connector.
The numbering system is different for female and male connectors.

Example: Numbered in order from upper left to lower right / Numbered in order from upper right to lower left

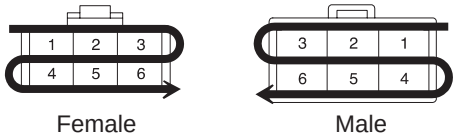

[K] : Indicates the ground point. The code consists of the two characters: A letter and number.
The first character of the code indicates the alphabetical code allocated to the wire harness. The second character indicates a serial number used to distinguish between the ground points in cases when more than one ground point exist on the same wire harness.

[L] : Page No.

[M] : Indicates the ignition key position(s) when the power is supplied to the fuse(s).

[N] : Indicates a wiring Splice Point.

Example:

[O] : Wire Harness Code
Each wire harness is represented by a code. Wire harness codes are used in the parts codes, connector joining wire harness and wire harness codes, and ground point codes. For example, H7 (combination meter), CH1 (male, connector joining wire harness and wire harness), and H2 (ground point) indicate that they are the parts belonging to the same wire harness "H".

[P] ○ **: Parts Location**

Code	See Page	Code	See Page	Code	See Page
H4	36	H7	36	H17	38
H6	36	H9	38	J7	38

[Q] ⬭ **: Relay Blocks**

Code	See Page	Relay Blocks (Relay Block Location)
1	18	R/B No.1 (Instrument Panel Brace LH)

[R] ⬭ **: Junction Block and Wire Harness Connector**

Code	See Page	Junction Block and Wire Harness (Connector Location)
3C	22	Instrument Panel Wire and J/B No.3 (Instrument Panel Brace LH)
IB	20	Instrument Panel Wire and Instrument Panel J/B (Lower Finish Panel)

[S] ▭ **: Connector Joining Wire Harness and Wire Harness**

Code	See Page	Joining Wire Harness and Wire Harness (Connector Location)
CH1	42	Engine Room Main Wire and Instrument Panel Wire (Left Kick Panel)
HJ1	50	Instrument Panel Wire and Floor Wire (Right Kick Panel)

[T] ▽ **: Ground Points**

Code	See Page	Ground Points Location
H1	50	Under the Left Center Pillar
H2	50	Back Panel Center

[P] : Indicates reference pages showing the parts locations in the system circuit on the vehicle.

Example : Code ”H4” (Light Failure Sensor) is on page 36 of the manual.
* The first character of the code indicates the alphabetical code allocated to the wire harness, and the second character indicates the serial number of the parts connected to the wire harness.

Example : H 4
- 4 — Serial number for the connected parts
- H — Code for the wire harness

[Q] : Indicates the reference page showing the position on the vehicle of Relay Block Connectors in the system circuit.

Example : Connector ”1” is described on page 18 of this manual and is installed on the left side of the instrument panel.

[R] : Indicates the reference page showing the position on the vehicle of J/B and Wire Harness in the system circuit.

Example : Connector ”3C” connects the Instrument Panel Wire and J/B No.3. It is described on page 22 of this manual, and is installed on the instrument panel left side.

[S] : Indicates the reference page describing the wiring harness and wiring harness connector (the female wiring harness is shown first, followed by the male wiring harness).

Example : Connector ”CH1” connects the Engine Room Main Wire (female) and Instrument Panel Wire (male). It is described on page 42 of this manual, and is installed on the left side kick panel.

[T] : Indicates the reference page showing the position of the ground points on the vehicle.

Example : Ground point ”H2” is described on page 50 of this manual and is installed on the back panel center.

The ground points circuit diagram shows the connections from all major parts to the respective ground points. When troubleshooting a faulty ground point, checking the system circuits which use a common ground may help you identify the problem ground quickly. The relationship between ground points (A1 , A2 and D4 shown below) can also be checked this way.

I GROUND POINT

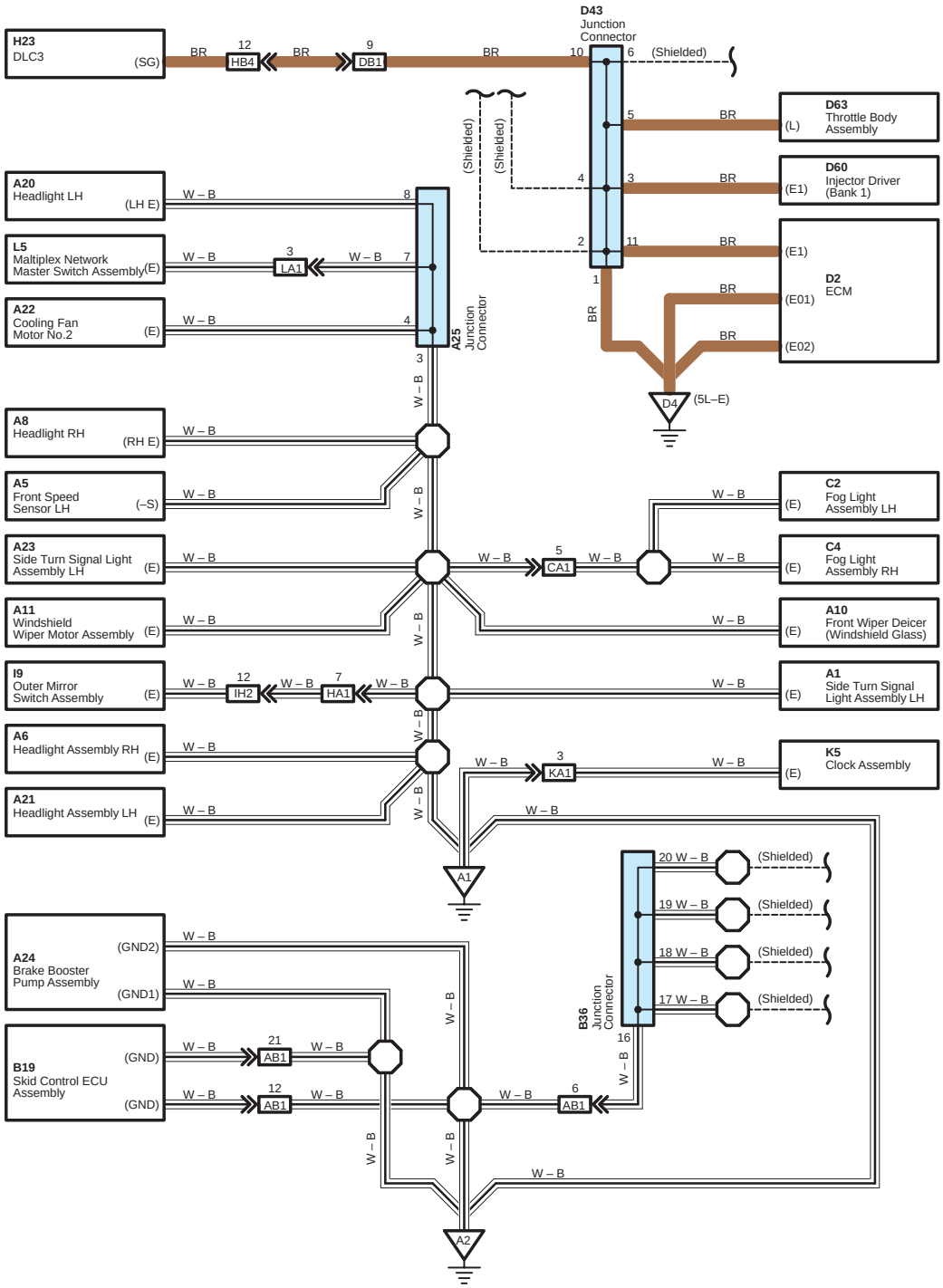

* The system shown here is an EXAMPLE ONLY. It is different to the actual circuit shown in the SYSTEM CIRCUITS SECTION.

The ”Current Flow Chart” section, describes which parts each power source (fuses, fusible links, and circuit breakers) transmits current to. In the Power Source circuit diagram, the conditions when battery power is supplied to each system are explained. Since all System Circuit diagrams start from the power source, the power source system must be fully understood.

J POWER SOURCE (Current Flow Chart)

The chart below shows the route by which current flows from the battery to each electrical source (Fusible Link, Circuit Breaker, Fues, etc.) and other parts

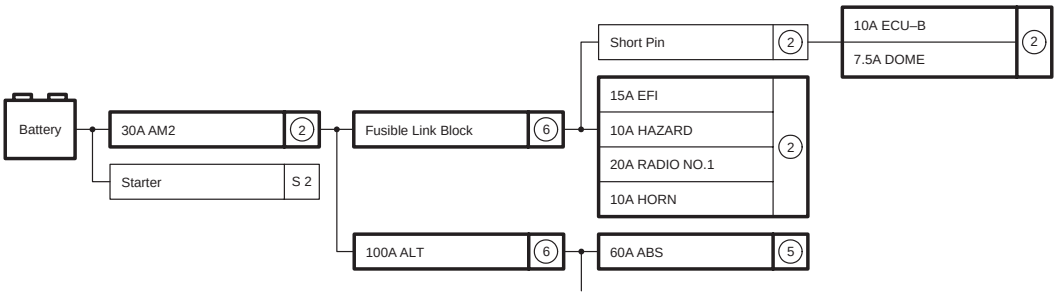

Engine Room R/B (See Page 20)

Fuse		System	Page
20A	STOP	ABS ABS and Traction Control Cruise Control Electronically Controlled Transmission Multiplex Communication System	194 187 180 166 210
10A	DOME	Cigarette Lighter Combination Meter Headlight Interior Light Key Reminder and Seat Belt Warning Light Auto Turn Off System	214 230 112 122

Power Source

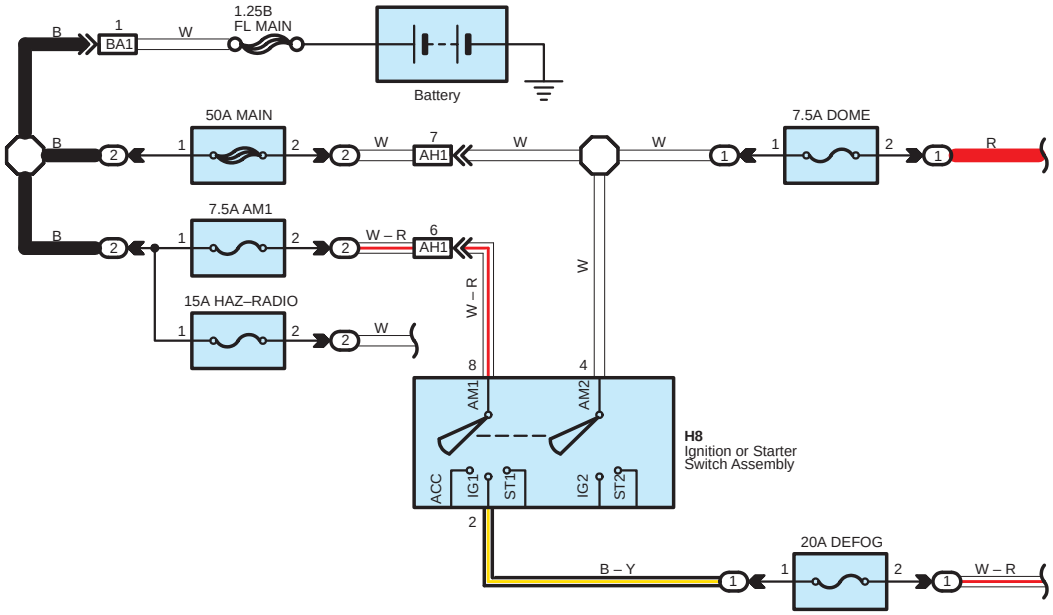

* The system shown here is an EXAMPLE ONLY. It is different to the actual circuit shown in the SYSTEM CIRCUITS SECTION.

K CONNECTOR LIST

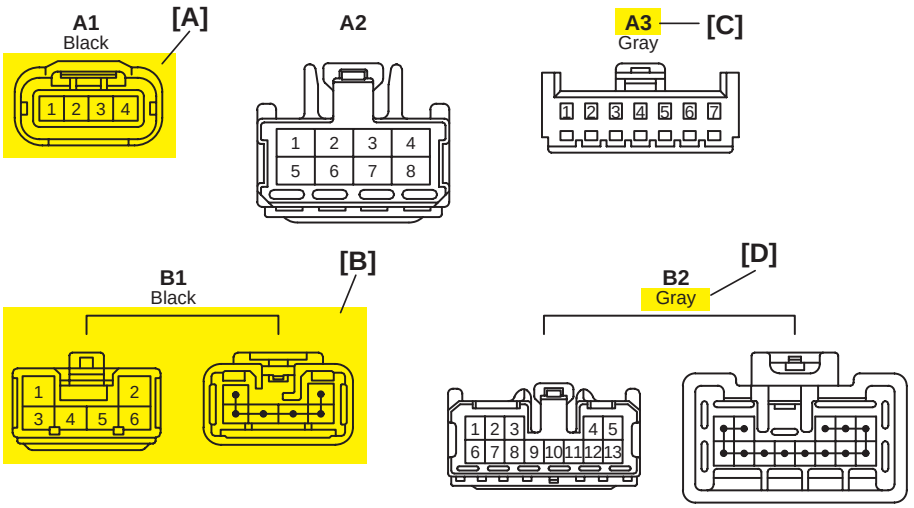

K CONNECTOR LIST

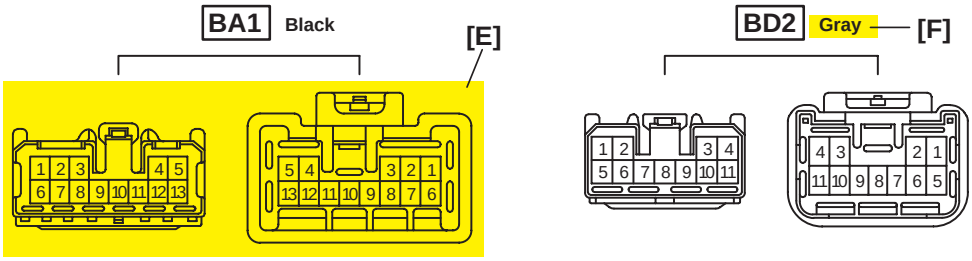

[A] : Indicates connector to be connected to a part. (The numeral indicates the pin No.)

[B] : Junction Connector
Indicates a connector which is connected to a short terminal.

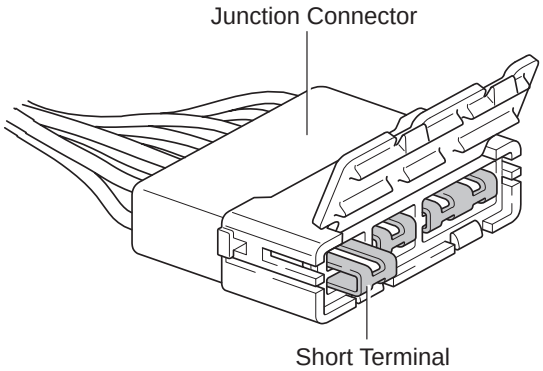

Junction connector in this manual include a short terminal which is connected to a number of wire harnesses. Always perform inspection with the short terminal installed.

[C] : Parts Code
The first letter of the code is taken from the first letter of part, and the numbers indicates its order in parts which start with the same letter.

[D] : Connector Color
Connectors not indicated are milky white in color.

[E] : Indicates the connector shapes which are used to join wire harnesses.
On Left : Female connector shapes
On Right : Male connector shapes
Numbers indicate pin numbers.

[F] : Indicates connector colors. (Connectors with not indicated colors are white)

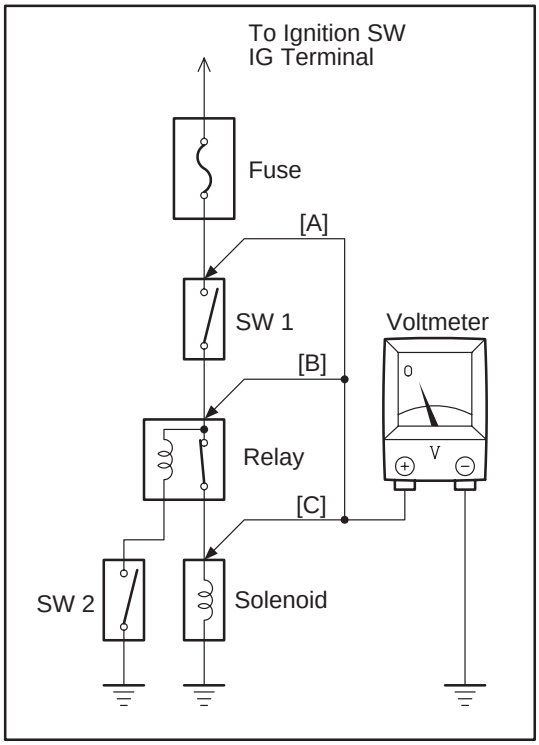

VOLTAGE CHECK

(a) Establish conditions in which voltage is present at the check point.

Example:
[A] – Ignition SW on
[B] – Ignition SW and SW 1 on
[C] – Ignition SW, SW 1 and Relay on (SW 2 off)

(b) Using a voltmeter, connect the negative lead to a good ground point or negative battery terminal, and the positive lead to the connector or component terminal.
This check can be done with a test light instead of a voltmeter.

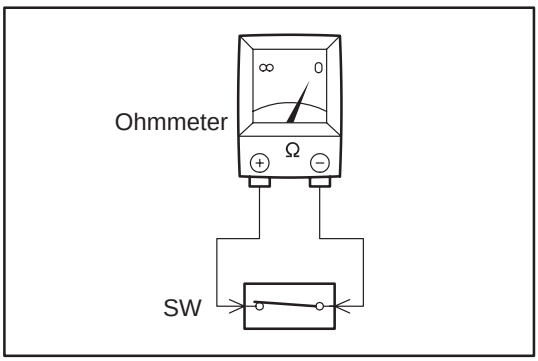

CONTINUITY AND RESISTANCE CHECK

(a) Disconnect the battery terminal or wire so there is no voltage between the check points.

(b) Contact the two leads of an ohmmeter to each of the check points.

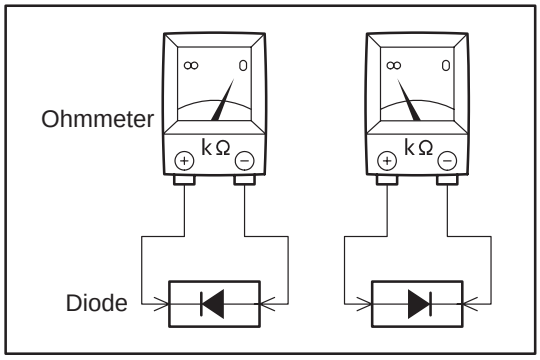

If the circuit has diodes, reverse the two leads and check again.
When contacting the negative lead to the diode positive side and the positive lead to the negative side, there should be continuity.
When contacting the two leads in reverse, there should be no continuity.

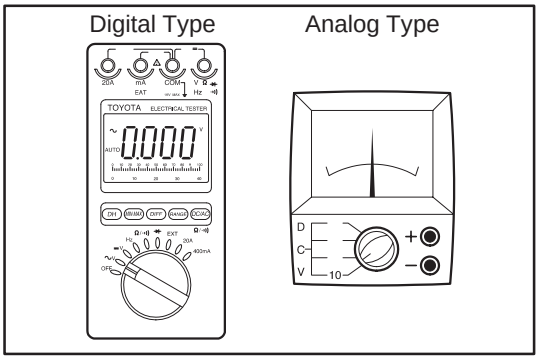

(c) Use a volt/ohmmeter with high impedance (10kΩ/V minimum) for troubleshooting of the electrical circuit.

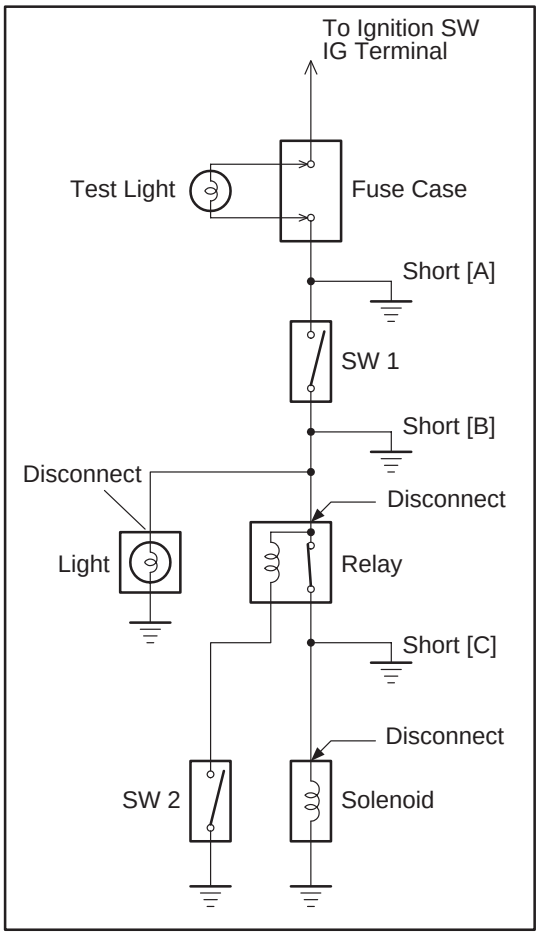

FINDING A SHORT CIRCUIT

(a) Remove the blown fuse and disconnect all loads of the fuse.

(b) Connect a test light in place of the fuse.

(c) Establish conditions in which the test light comes on.

Example:
[A] – Ignition SW on
[B] – Ignition SW and SW 1 on
[C] – Ignition SW, SW 1 and Relay on (Connect the Relay) and SW 2 off (or Disconnect SW 2)

(d) Disconnect and reconnect the connectors while watching the test light.
The short lies between the connector where the test light stays lit and the connector where the light goes out.

(e) Find the exact location of the short by lightly shaking the problem wire along the body.

CAUTION:

(a) Do not open the cover or the case of the ECU unless absolutely necessary. (If the IC terminals are touched, the IC may be destroyed by static electricity.)

(b) When replacing the internal mechanism (ECU part) of the digital meter, be careful that no part of your body or clothing comes in contact with the terminals of leads from the IC, etc. of the replacement part (spare part).

DISCONNECTION OF MALE AND FEMALE CONNECTORS

To pull apart the connectors, pull on the connector itself, not the wire harness.

HINT:Check to see what kind of connector you are disconnecting before pulling apart.

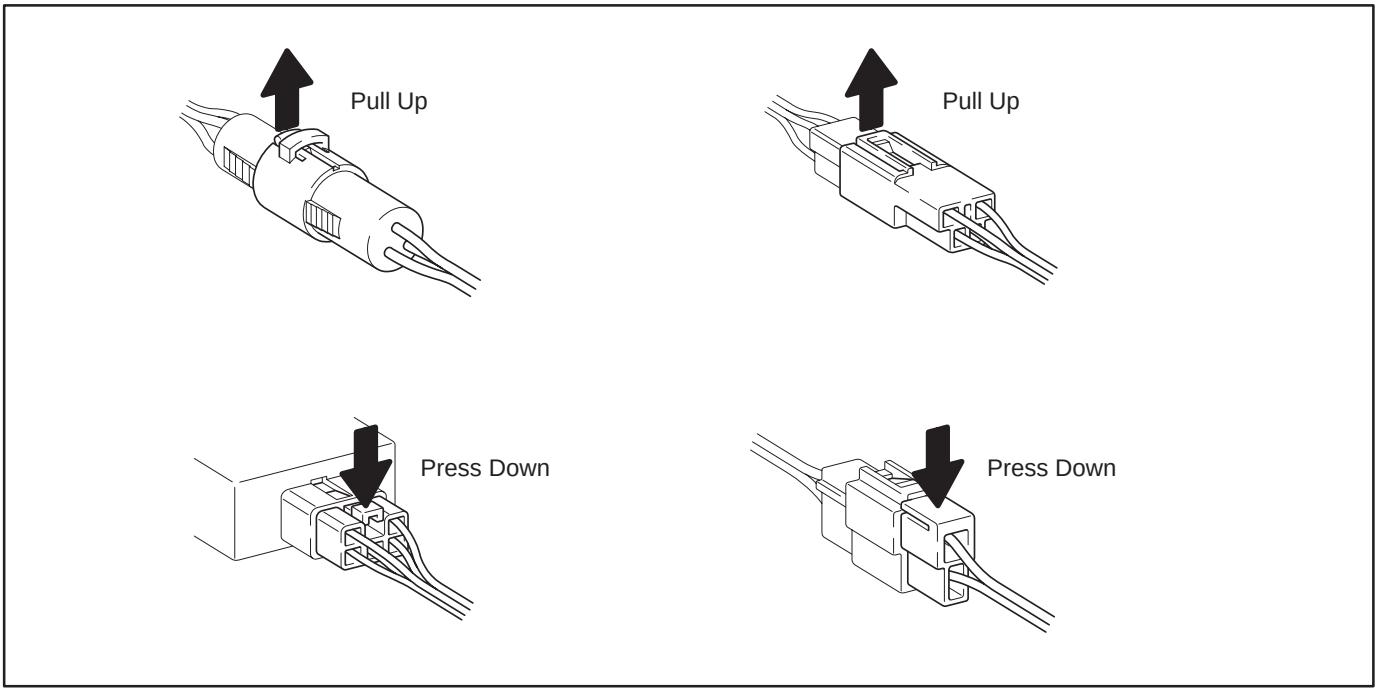

Memo

ABBREVIATIONS

The following abbreviations are used in this manual.

A/C	=	Air Conditioner
A/T	=	Automatic Transmission
ABS	=	Anti-Lock Brake System
CAN	=	Controller Area Network
CPU	=	Central Processing Unit
DLC3	=	Data Link Connector 3
E.F.I.	=	Electronic Fuel Injection
ECM	=	Engine Control Module
ECT	=	Electronic Control Transmission
ECU	=	Electronic Control Unit
EDU	=	Electronic Driving Unit
EPS	=	Electric Motor Power Steering
J/B	=	Junction Block
LED	=	Light Emitting Diode
LH	=	Left-Hand
LHD	=	Left-Hand Drive
M/T	=	Manual Transmission
R/B	=	Relay Block
RH	=	Right-Hand
RHD	=	Right-Hand Drive
SRS	=	Supplemental Restraint System
TRC	=	Traction Control
U.K.	=	United Kingdom
VSC	=	Vehicle Stability Control
VSV	=	Vacuum Switching Valve
VVT	=	Variable Valve Timing
w/	=	With
w/o	=	Without

"EFI" and "VVT" are registered trademarks of Toyota Motor Corporation.

* The titles given inside the components are the names of the terminals (terminal codes) and are not treated as being abbreviations.

E GLOSSARY OF TERMS AND SYMBOLS

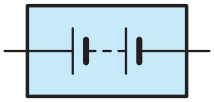

BATTERY
Stores chemical energy and converts it into electrical energy. Provides DC current for the auto's various electrical circuits.

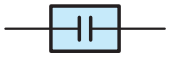

CAPACITOR (Condenser)
A small holding unit for temporary storage of electrical voltage.

CIGARETTE LIGHTER
An electric resistance heating element.

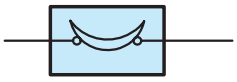

CIRCUIT BREAKER
Basically a reusable fuse, a circuit breaker will heat and open if too much current flows through it. Some units automatically reset when cool, others must be manually reset.

DIODE
A semiconductor which allows current flow in only one direction.

DIODE, ZENER
A diode which allows current flow in one direction but blocks reverse flow only up to a specific voltage. Above that potential, it passes the excess voltage. This acts as a simple voltage regulator.

PHOTODIODE
The photodiode is a semiconductor which controls the current flow according to the amount of light.

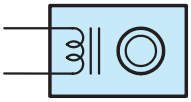

DISTRIBUTOR, IIA
Channels high–voltage current from the ignition coil to the individual spark plugs.

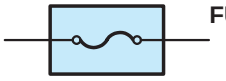

FUSE
A thin metal strip which burns through when too much current flows through it, thereby stopping current flow and protecting a circuit from damage.

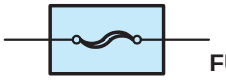

(for Medium Current Fuse)

FUSIBLE LINK
A heavy–gauge wire placed in high amperage circuits which burns through on overloads, thereby protecting the circuit. The numbers indicate the crosssection surface area of the wires.

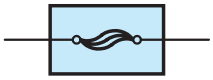

(for High Current Fuse or Fusible Link)

GROUND
The point at which wiring attaches to the Body, thereby providing a return path for an electrical circuit; without a ground, current cannot flow.

1. SINGLE FILAMENT

2. DOUBLE FILAMENT

HEADLIGHTS
Current flow causes a headlight filament to heat up and emit light. A headlight may have either a single (1) filament or a double (2) filament

HORN
An electric device which sounds a loud audible signal.

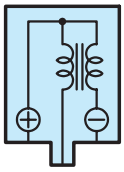

IGNITION COIL
Converts low–voltage DC current into high–voltage ignition current for firing the spark plugs.

LIGHT
Current flow through a filament causes the filament to heat up and emit light.

LED (LIGHT EMITTING DIODE)
Upon current flow, these diodes emit light without producing the heat of a comparable light.

METER, ANALOG
Current flow activates a magnetic coil which causes a needle to move, thereby providing a relative display against a background calibration.

METER, DIGITAL
Current flow activates one or many LED's, LCD's, or fluorescent displays, which provide a relative or digital display.

MOTOR
A power unit which converts electrical energy into mechanical energy, especially rotary motion.

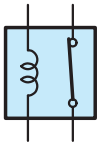

RELAY

1. NORMALLY CLOSED

Basically, an electrically operated switch which may be normally closed (1) or open (2).
Current flow through a small coil creates a magnetic field which either opens or closes an attached switch.

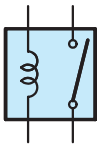

2. NORMALLY OPEN

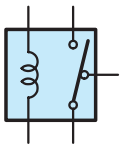

RELAY, DOUBLE THROW

A relay which passes current through one set of contacts or the other.

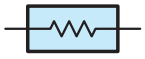

RESISTOR

An electrical component with a fixed resistance, placed in a circuit to reduce voltage to a specific value.

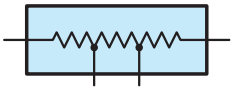

RESISTOR, TAPPED

A resistor which supplies two or more different non adjustable resistance values.

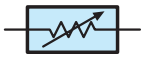

RESISTOR, VARIABLE or RHEOSTAT

A controllable resistor with a variable rate of resistance.
Also called a potentiometer or rheostat.

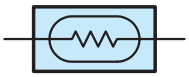

SENSOR (Thermistor)

A resistor which varies its resistance with temperature.

(Reed Switch Type)

SENSOR, SPEED

Uses magnetic impulses to open and close a switch to create a signal for activation of other components.

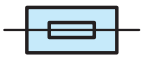

SHORT PIN

Used to provide an unbroken connection within a junction block.

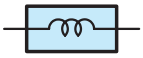

SOLENOID

An electromagnetic coil which forms a magnetic field when current flows, to move a plunger, etc.

SPEAKER

An electromechanical device which creates sound waves from current flow.

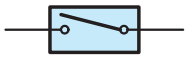

SWITCH, MANUAL

1. NORMALLY OPEN

Opens and closes circuits, thereby stopping (1) or allowing (2) current flow.

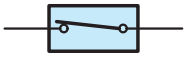

2. NORMALLY CLOSED

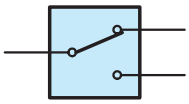

SWITCH, DOUBLE THROW

A switch which continuously passes current through one set of contacts or the other.

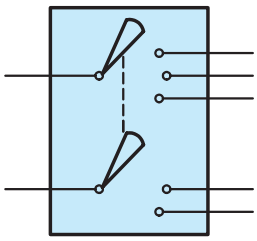

SWITCH, IGNITION

A key operated switch with several positions which allows various circuits, particularly the primary ignition circuit, to become operational.

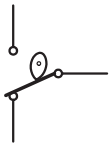

SWITCH, WIPER PARK

Automatically returns wipers to the stop position when the wiper switch is turned off.

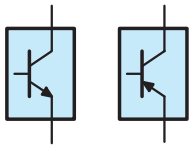

TRANSISTOR

A solidstate device typically used as an electronic relay; stops or passes current depending on the voltage applied at ”base”.

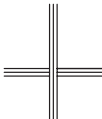

WIRES

(1) NOT CONNECTED

Wires are always drawn as straight lines on wiring diagrams.
Crossed wires (1) without a black dot at the junction are not joined;
crossed wires (2) with a black dot or octagonal (⬡) mark at the junction are spliced (joined) connections.

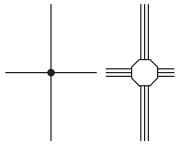

(2) SPLICED

[Engine Compartment]

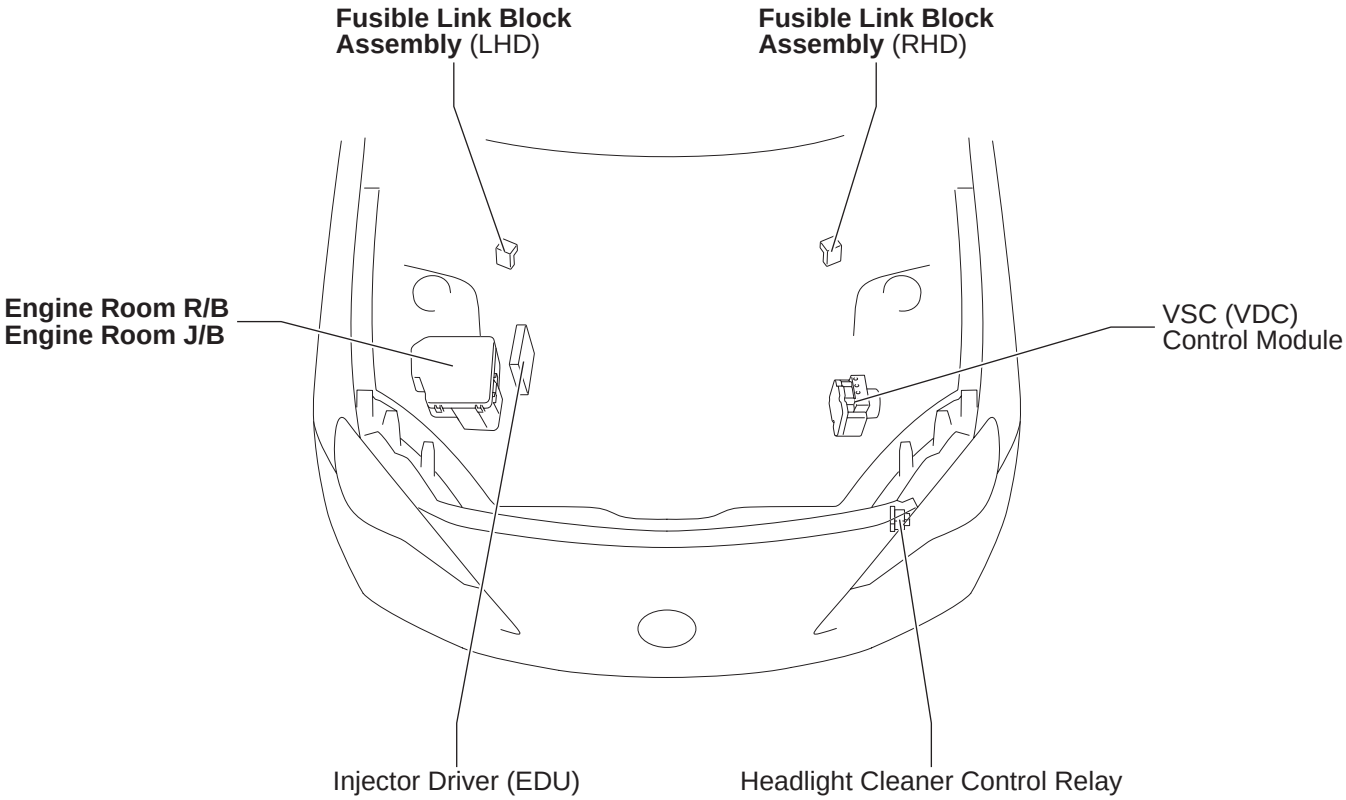

[Instrument Panel]

(LHD)

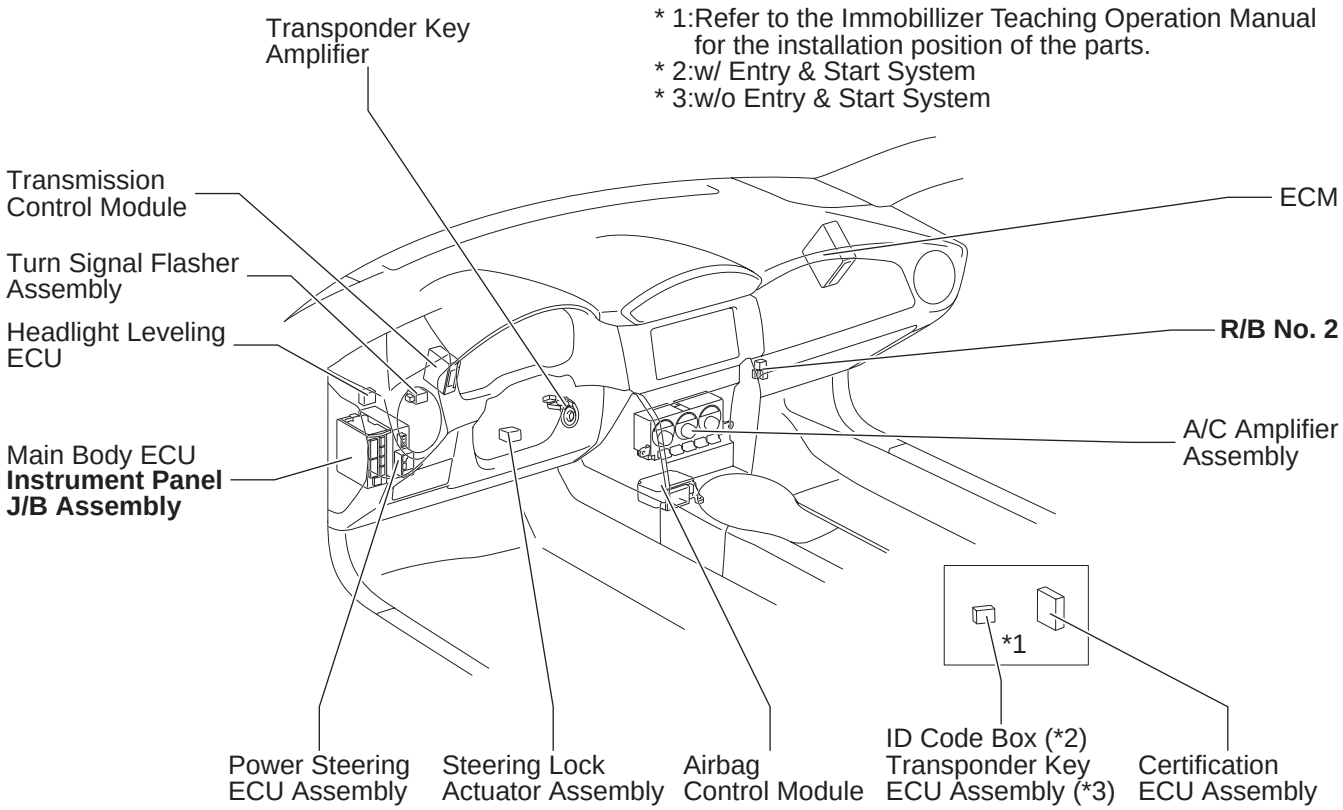

(RHD)

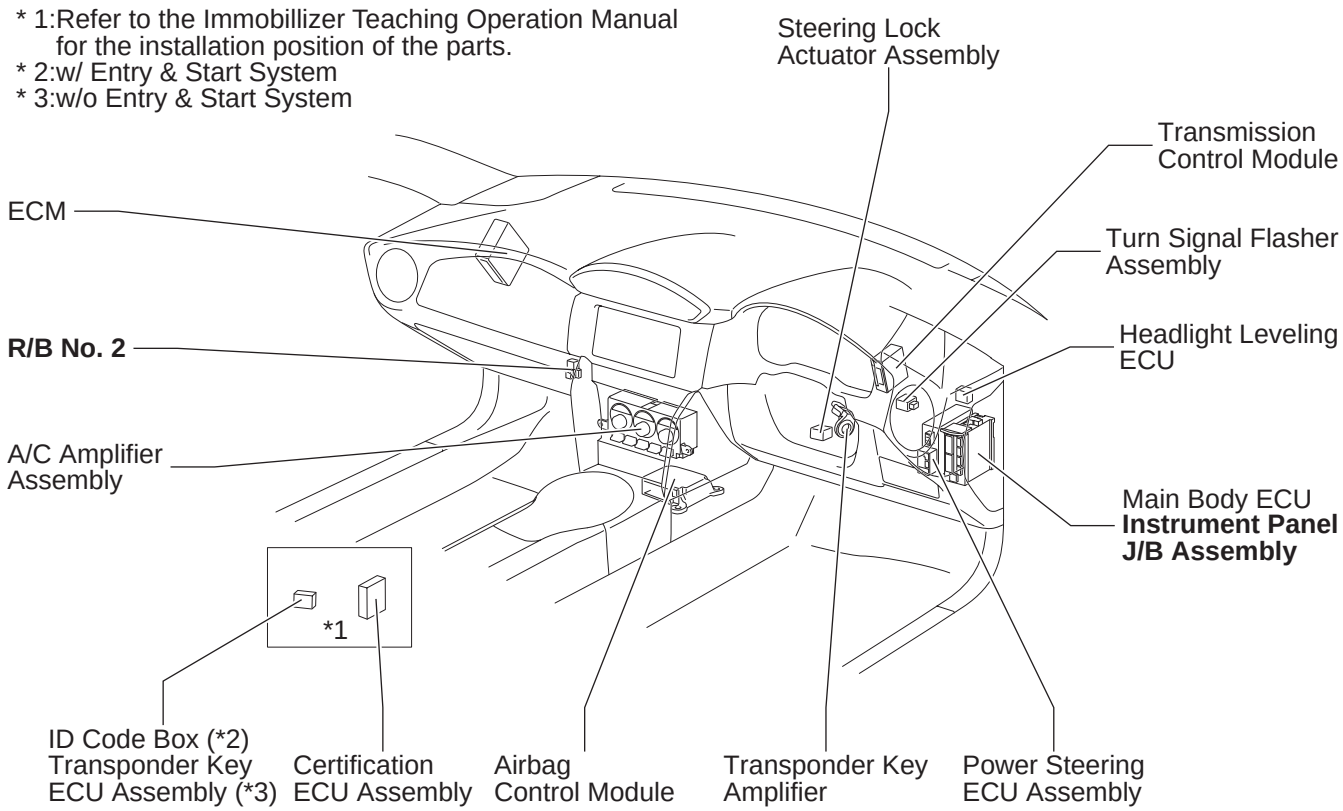

[Body]

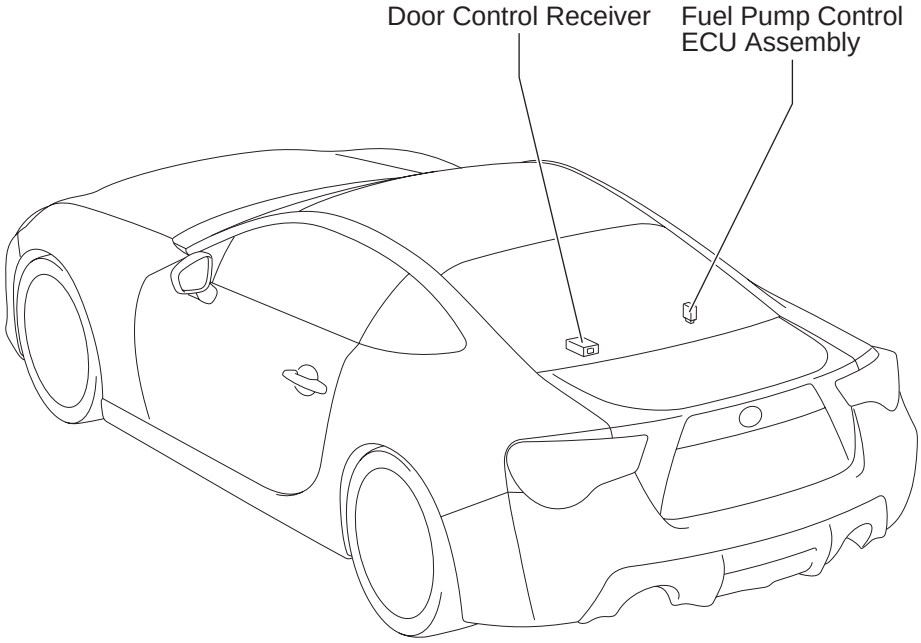

F RELAY LOCATIONS

① : Engine Room R/B	Engine Compartment Right (See Page 20)
⬭ : Engine Room J/B	

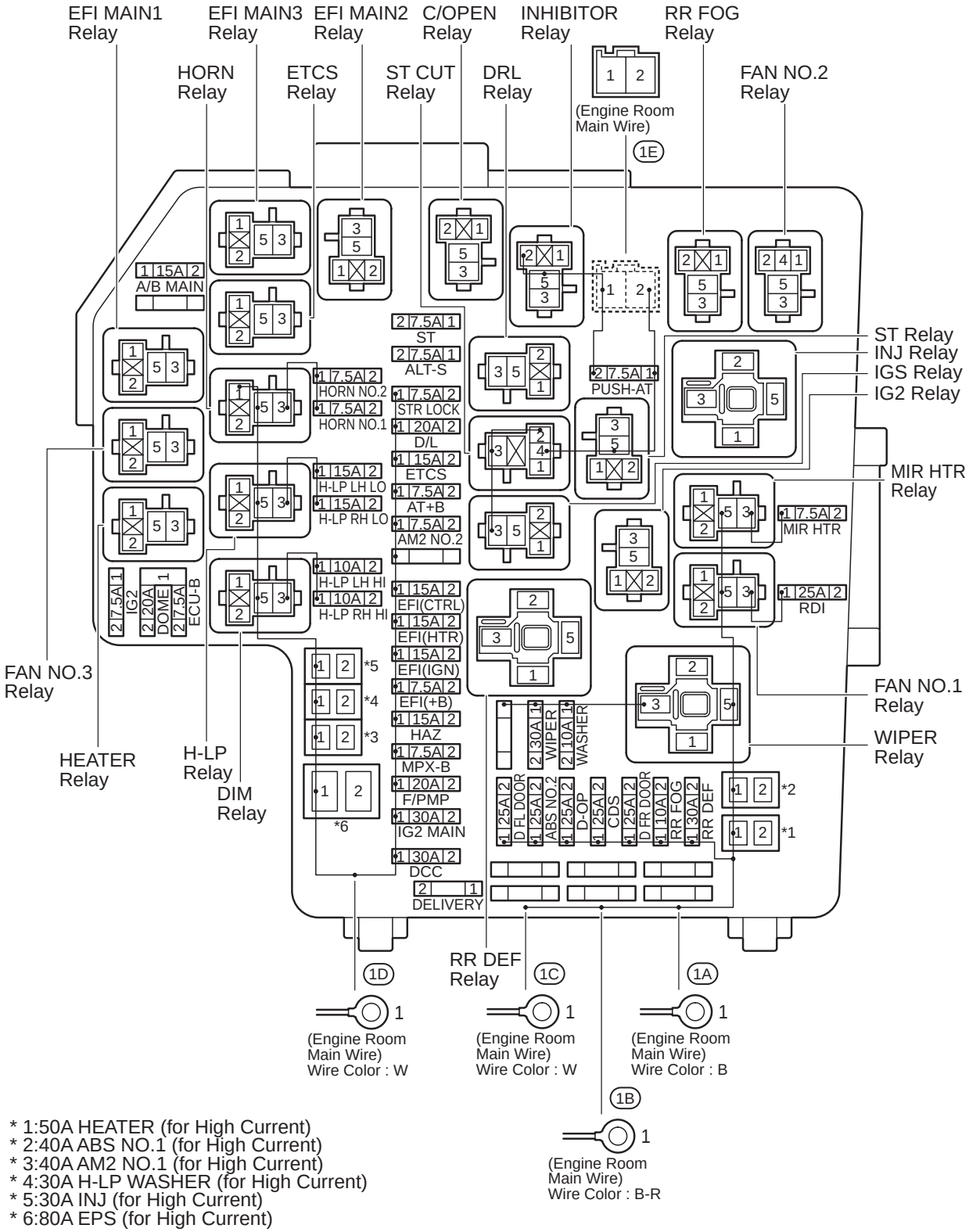

* 1:50A HEATER (for High Current)
* 2:40A ABS NO.1 (for High Current)
* 3:40A AM2 NO.1 (for High Current)
* 4:30A H-LP WASHER (for High Current)
* 5:30A INJ (for High Current)
* 6:80A EPS (for High Current)

② : R/B No. 2	Behind Glove Box (See Page 21)

(Automatic A/C)

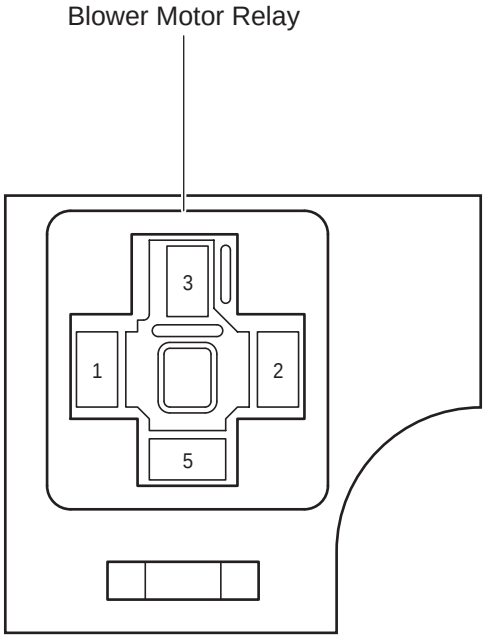

(Manual A/C)

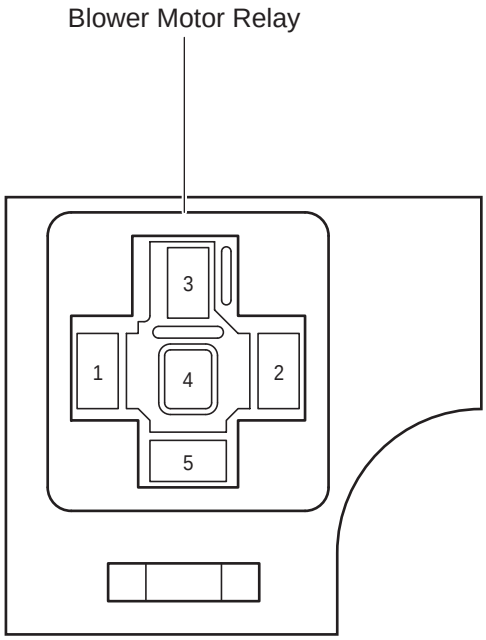

F RELAY LOCATIONS

: Instrument Panel J/B Assembly	**Instrument Panel Reinforcement (See Page 21)**

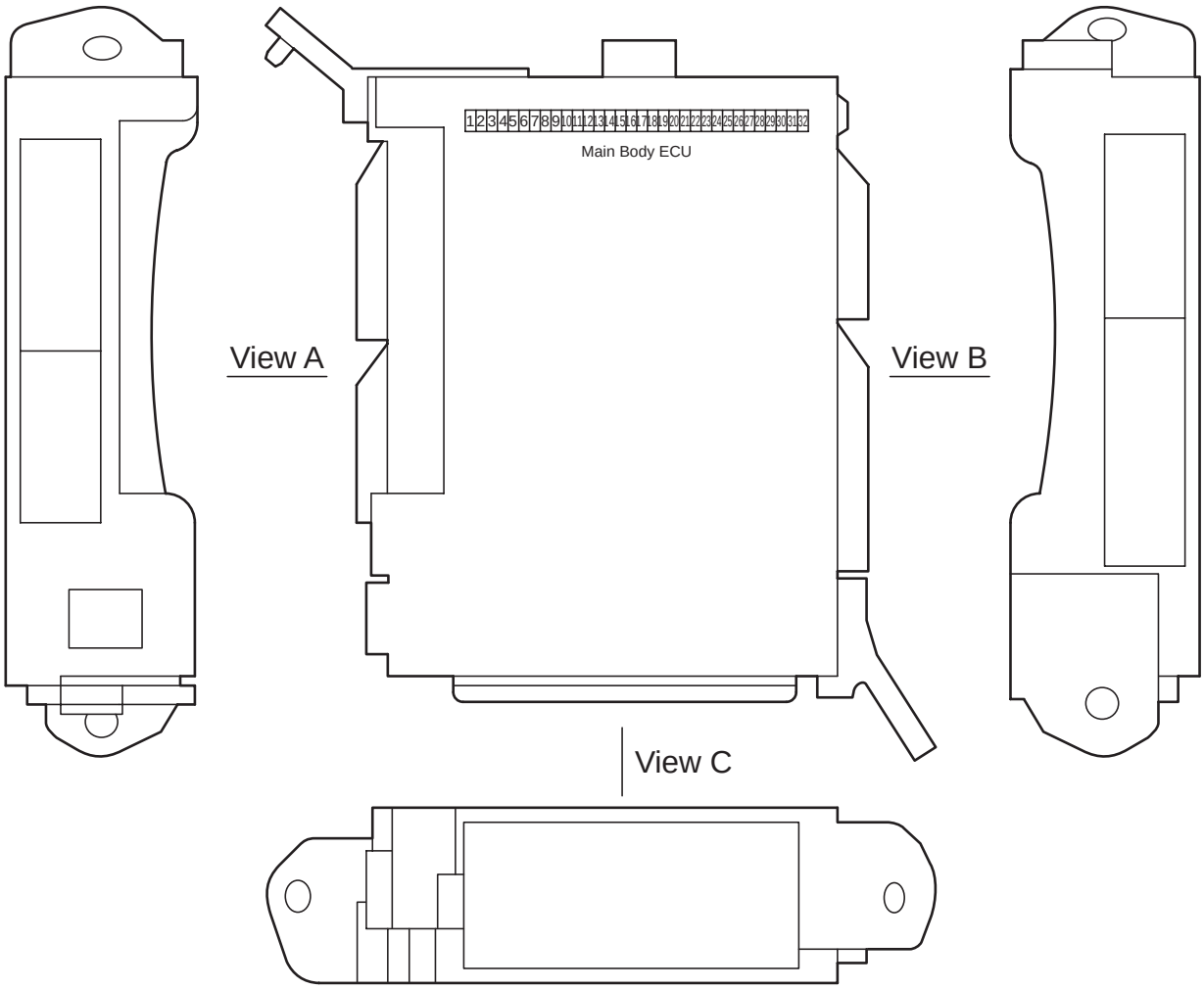

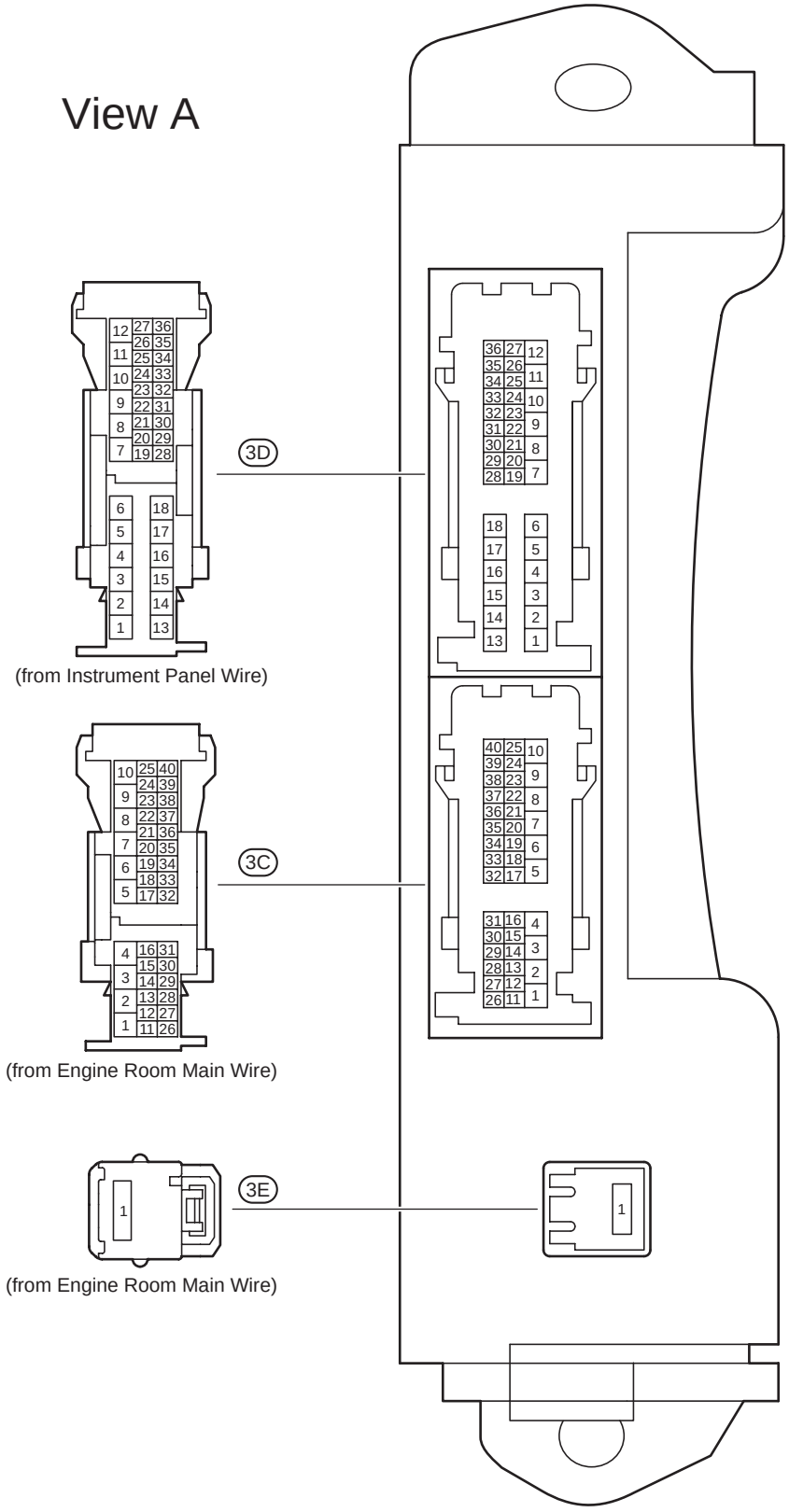
View A
3D
(from Instrument Panel Wire)
3C
(from Engine Room Main Wire)
3E
(from Engine Room Main Wire)

: Instrument Panel J/B Assembly	**Instrument Panel Reinforcement (See Page 21)**

View B

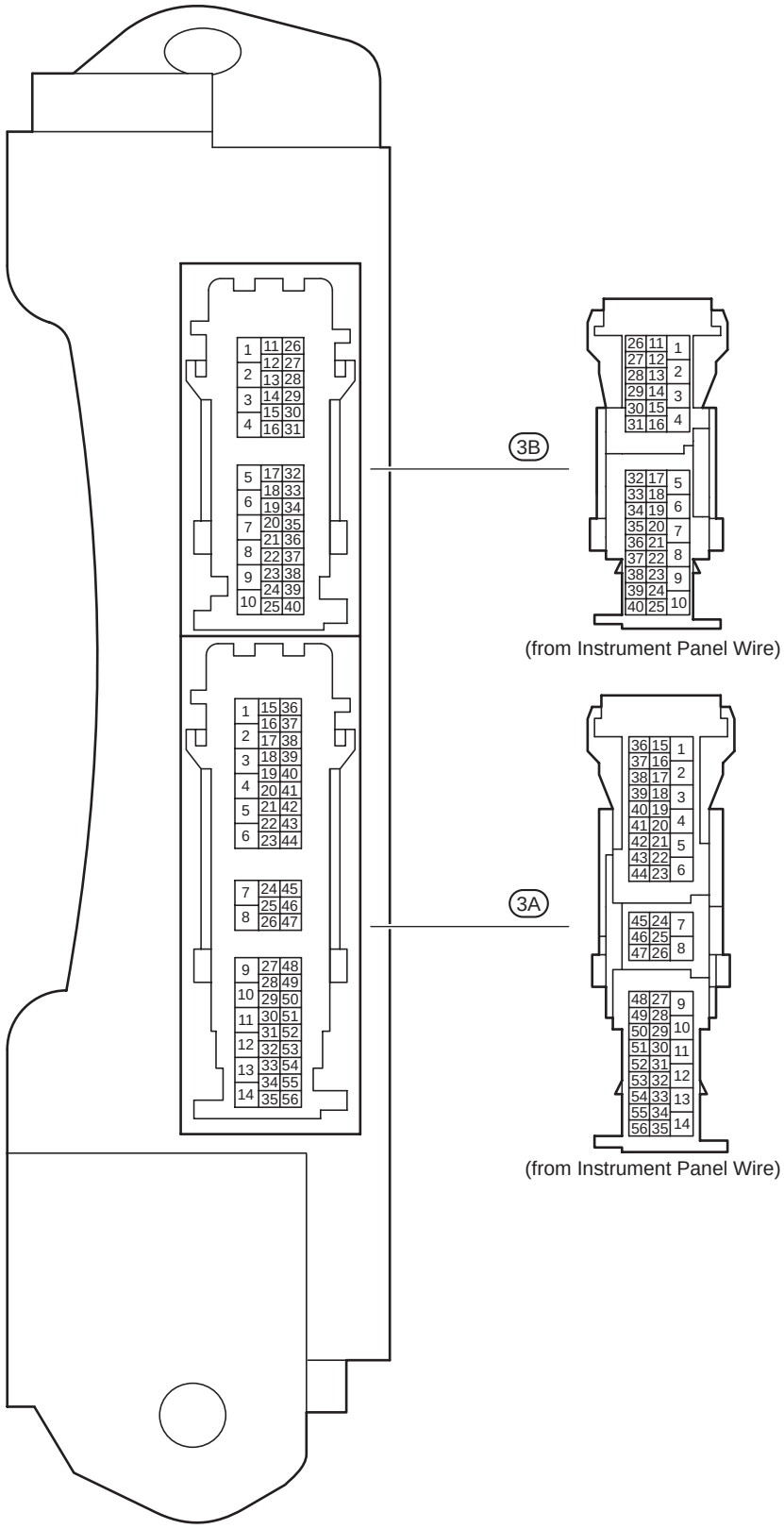

View C

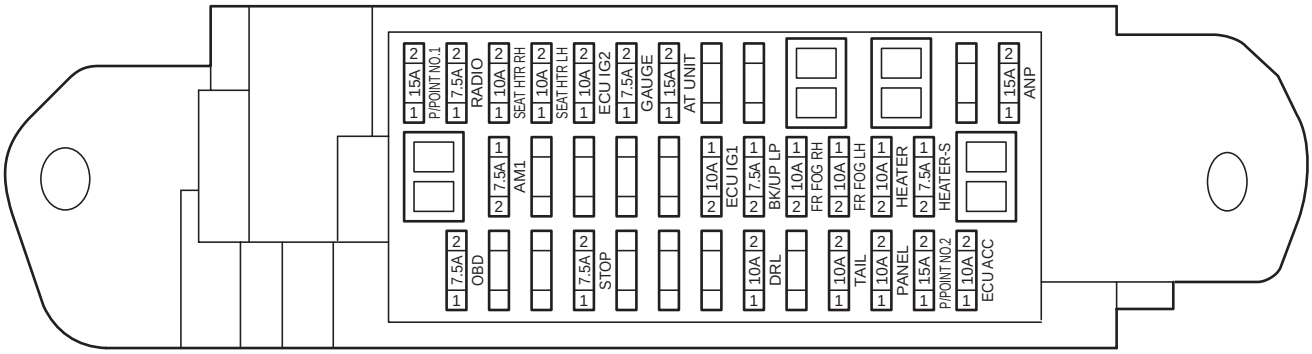
2 15A 1
P/POINT NO.1
2 7.5A 1
RADIO
2 10A 1
SEAT HTR RH
2 10A 1
SEAT HTR LH
2 10A 1
ECU IG2
2 7.5A 1
GAUGE
2 15A 1
AT UNIT
2 15A 1
ANP
1 7.5A 2
AM1
1 10A 2
ECU IG1
1 7.5A 2
BK/UP LP
1 10A 2
FR FOG RH
1 10A 2
FR FOG LH
1 10A 2
HEATER
1 7.5A 2
HEATER-S
2 7.5A 1
OBD
2 7.5A 1
STOP
2 10A 1
DRL
2 10A 1
TAIL
2 10A 1
PANEL
2 15A 1
P/POINT NO.2
2 10A 1
ECU ACC

[Instrument Panel J/B Assembly Inner Circuit]

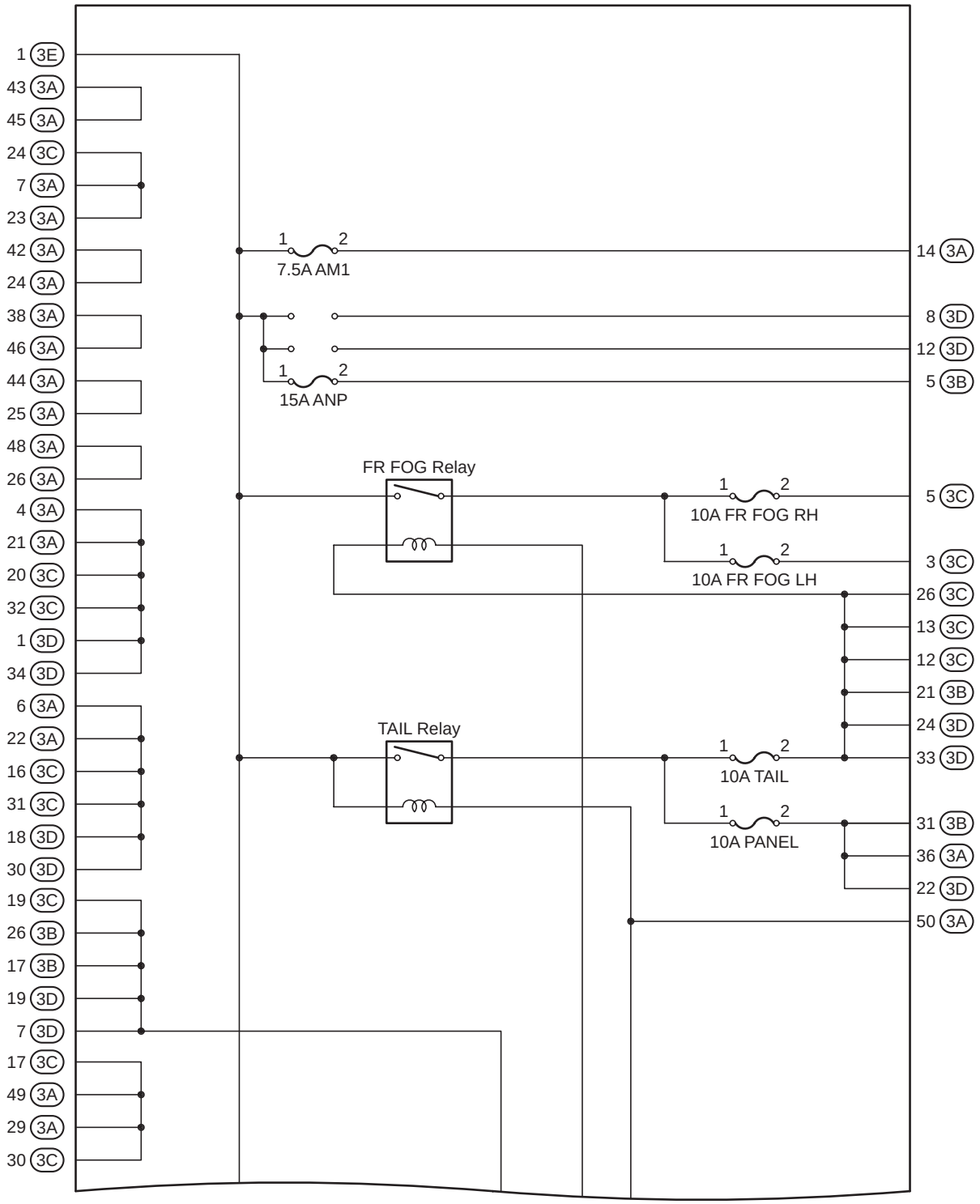

(Cont. Next Page)

(Cont'd)

* 1:P DR UNLOCK Relay (w/ Double Locking)
A DR UNLOCK Relay (w/o Double Locking)

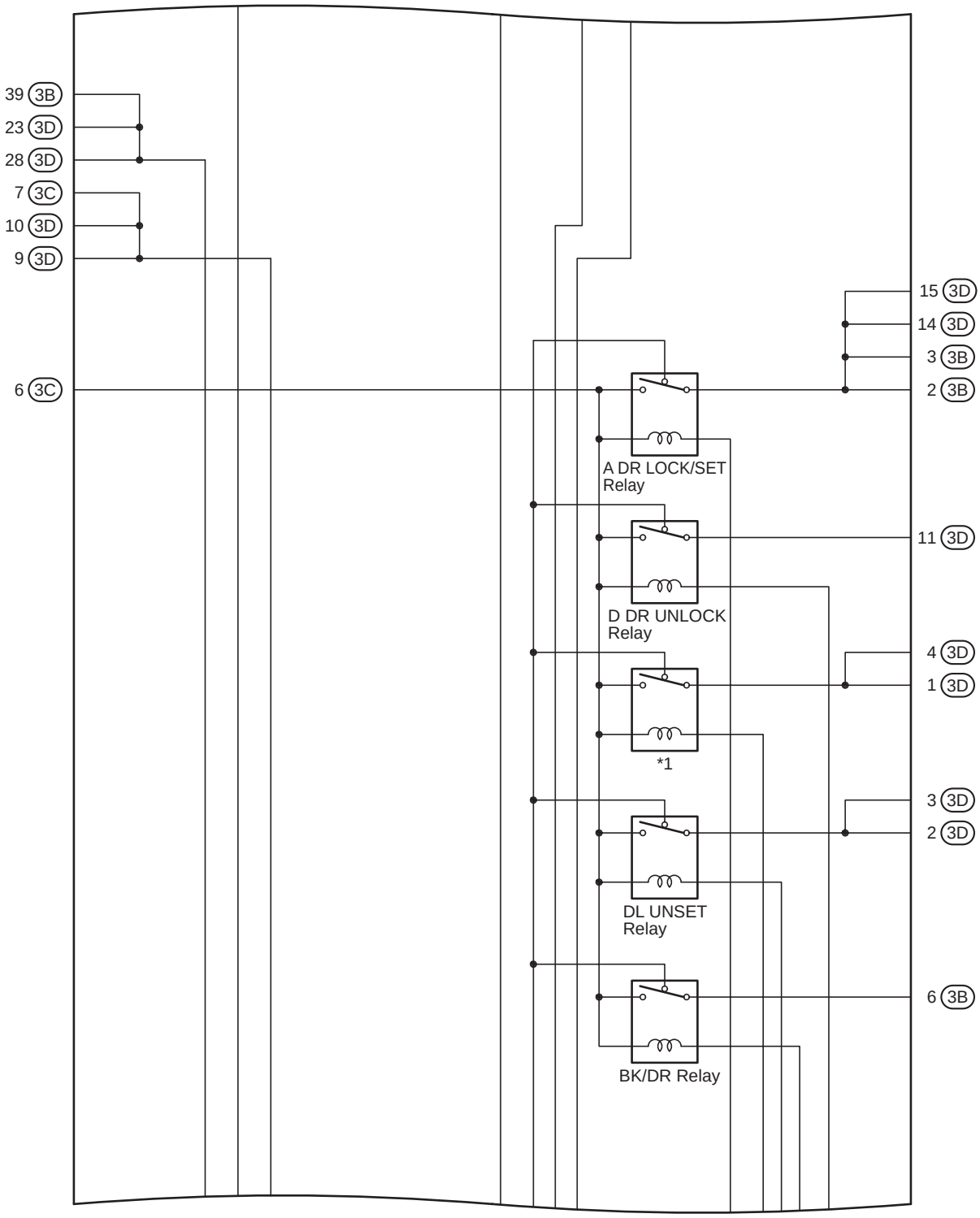

(Cont. Next Page)

[Instrument Panel J/B Assembly Inner Circuit]

(Cont'd)

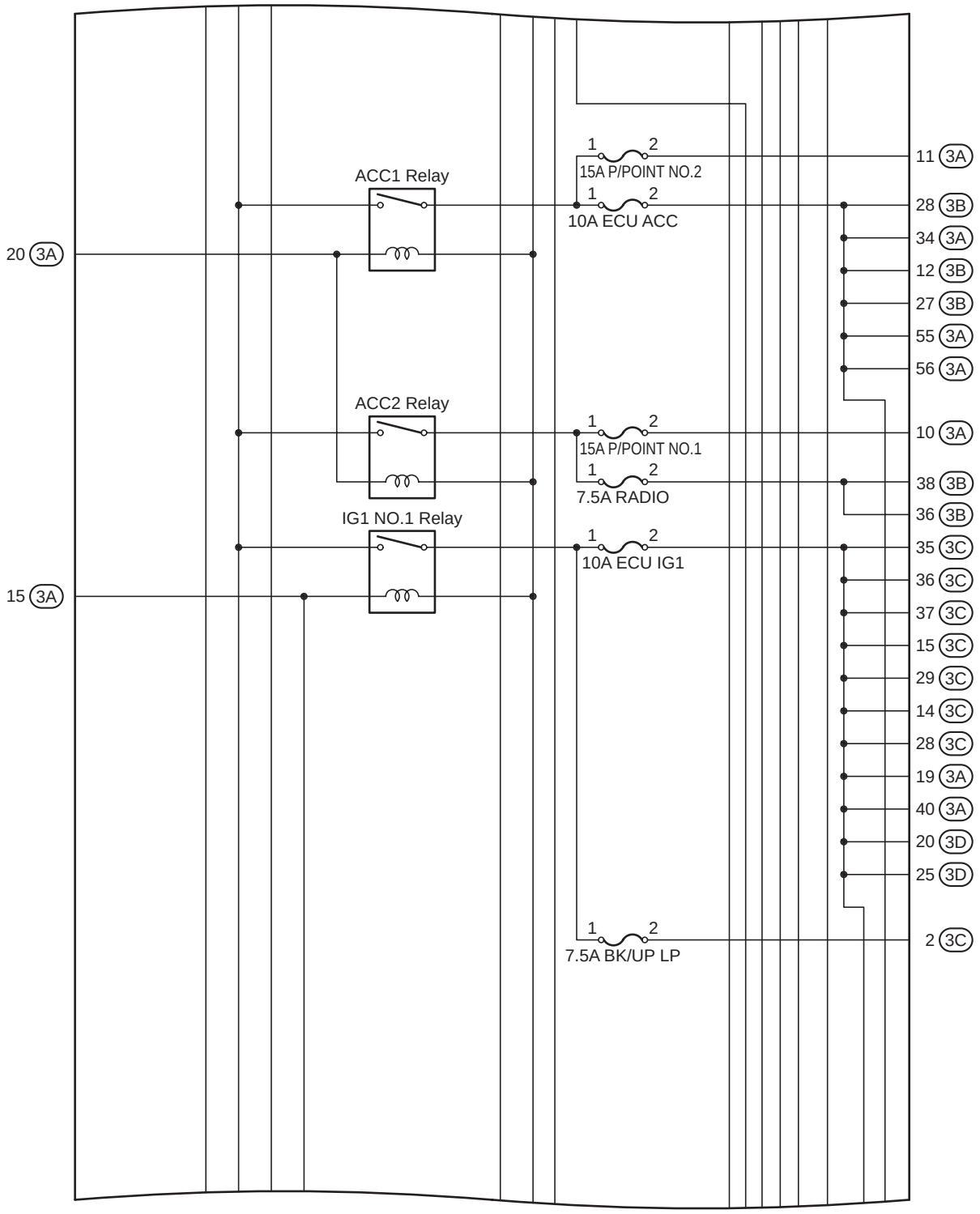

(Cont. Next Page)

(Cont'd)

* 2:w/ Double Locking
* 3:w/o Double Locking

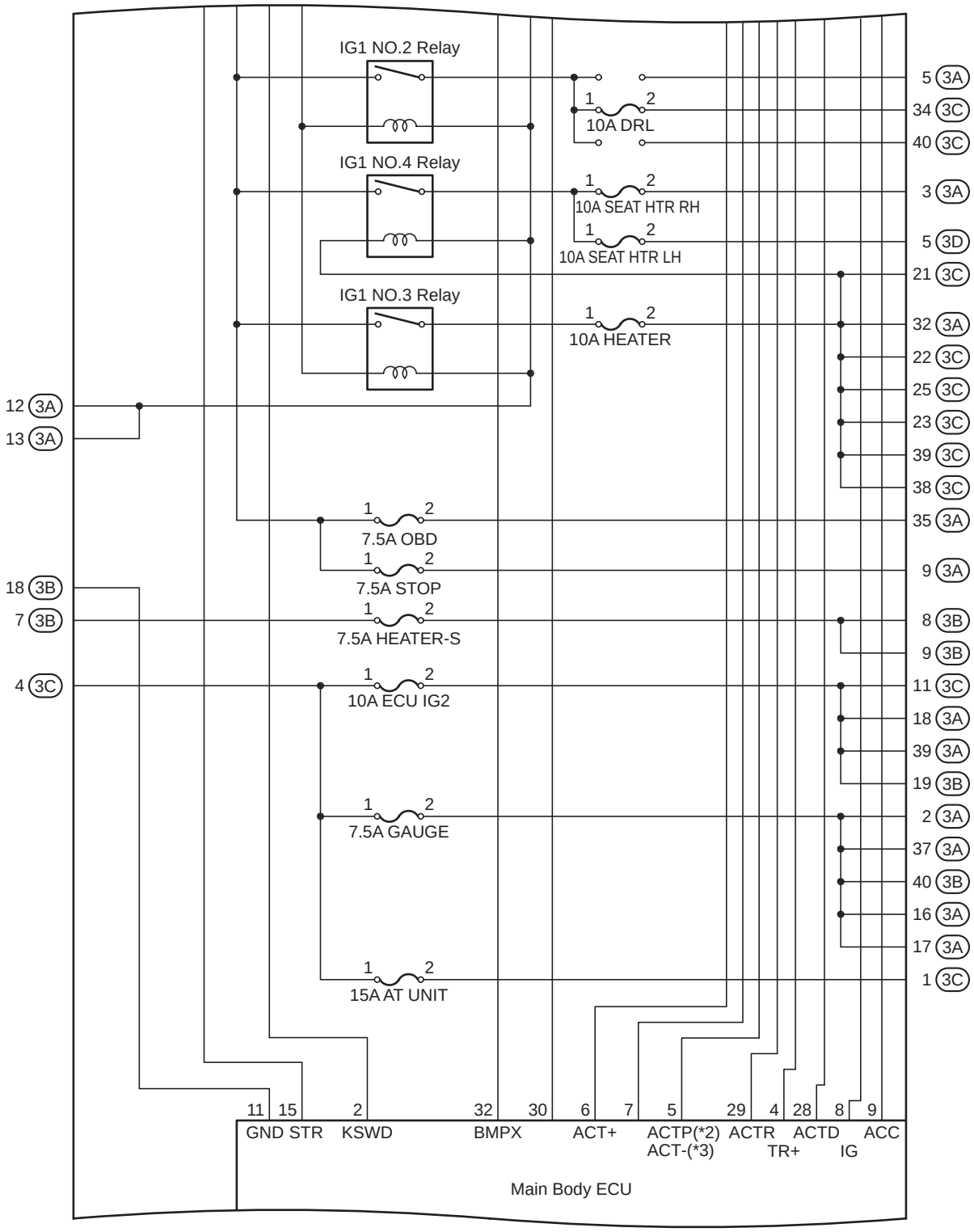

(Cont. Next Page)

[Instrument Panel J/B Assembly Inner Circuit]

(Cont'd)

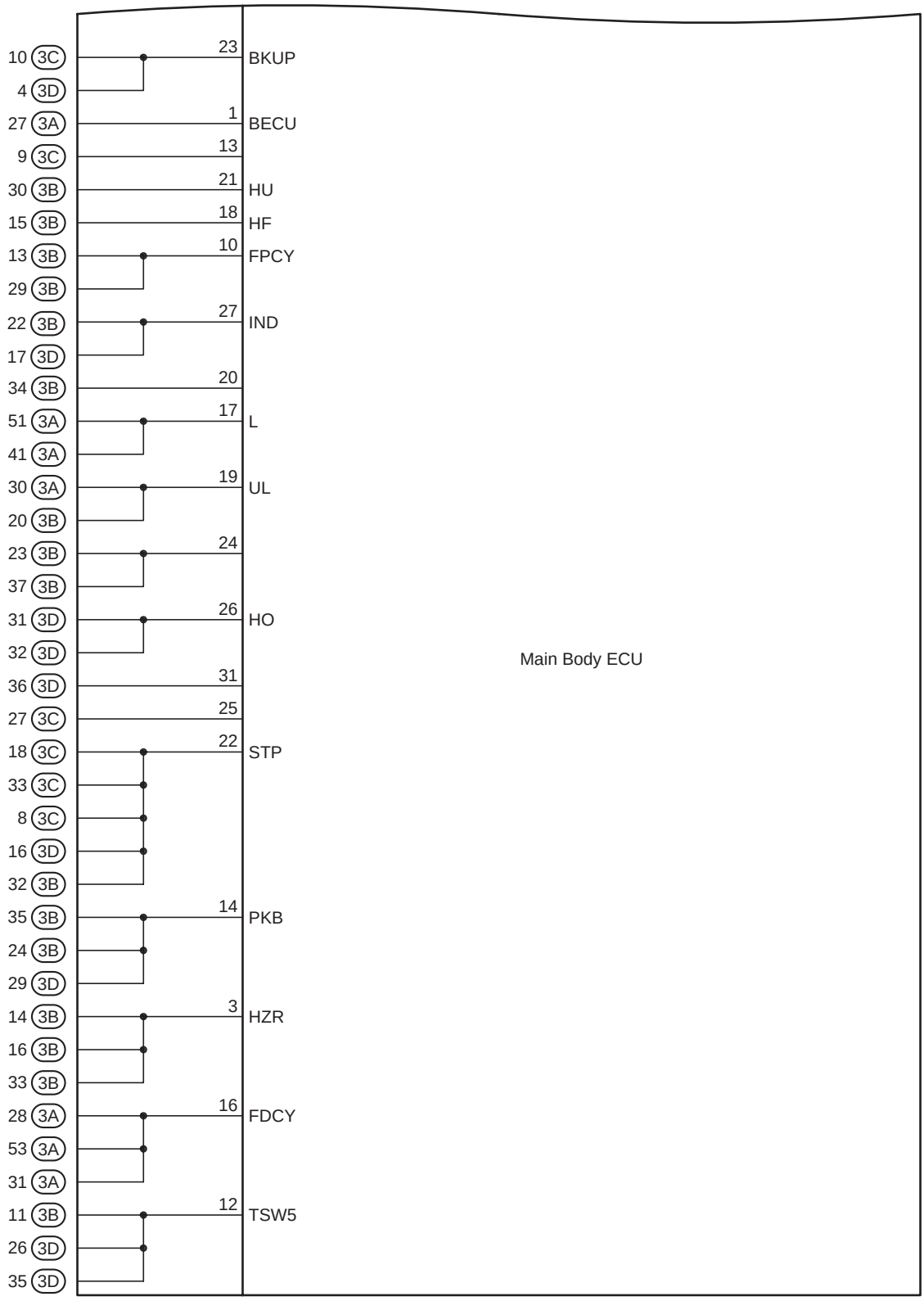

F RELAY LOCATIONS

Fusible Link Block Assembly	**LHD : Engine Compartment Right (See Page 20)**
	RHD : Engine Compartment Left (See Page 20)

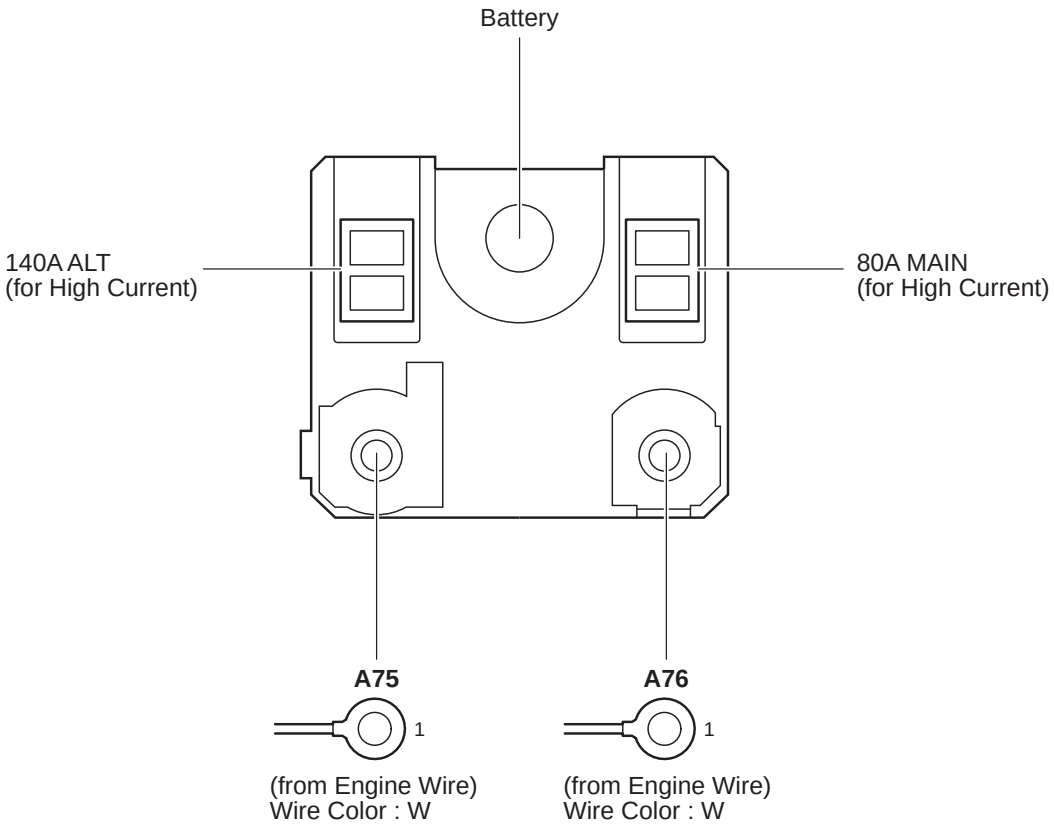

[Fusible Link Block Assembly Inner Circuit]

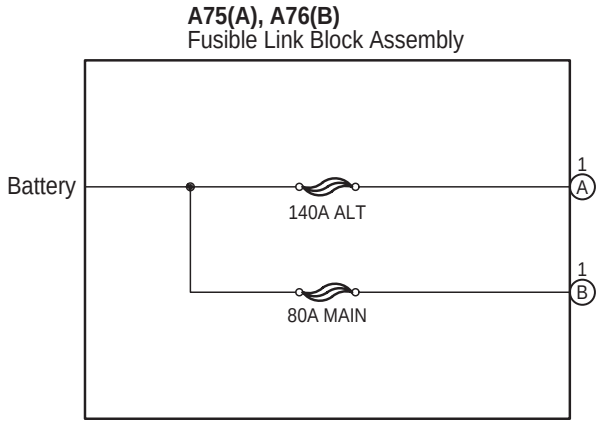

Position of Parts in Engine Compartment

[LHD]

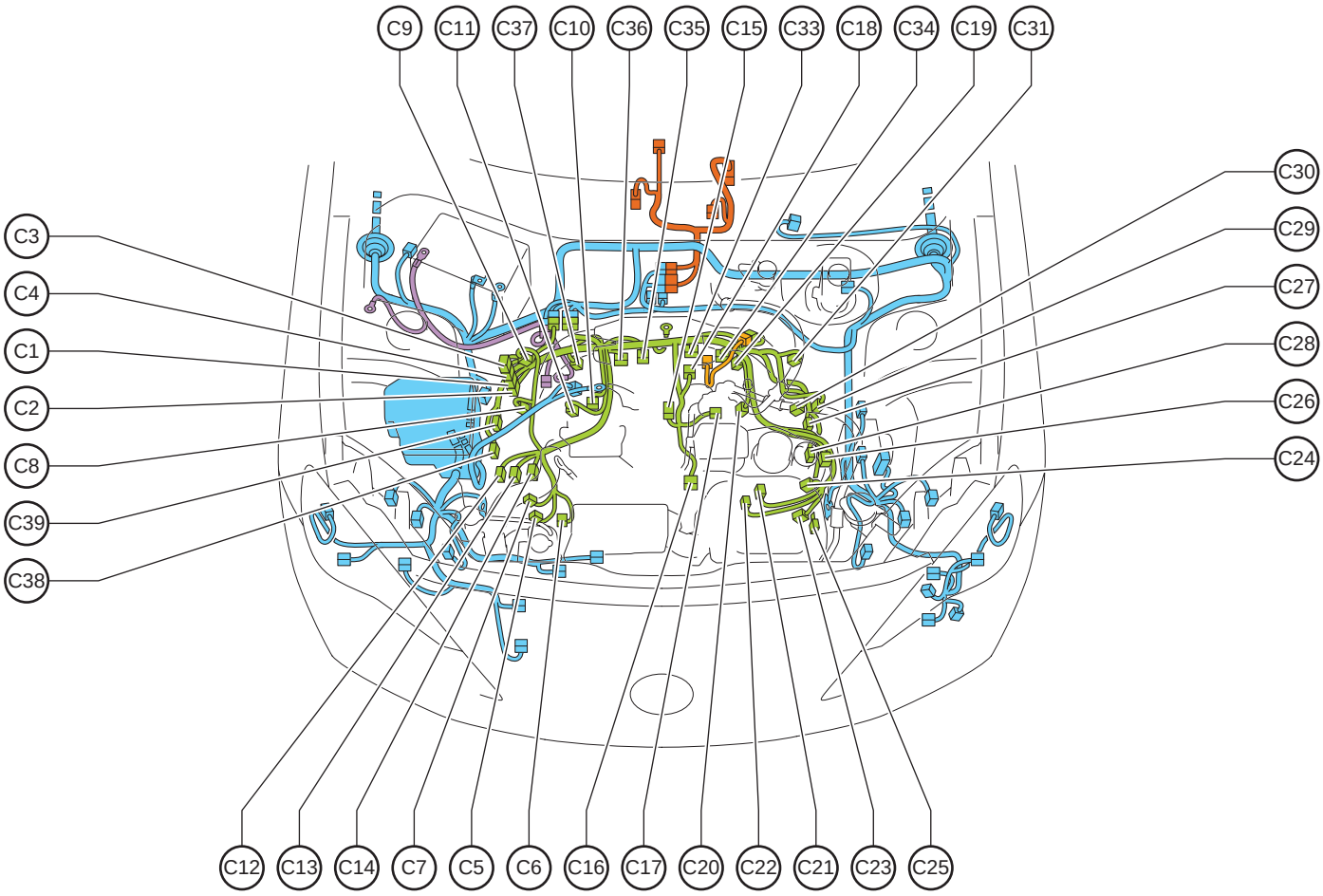

C1 Injector Driver (EDU)
C2 Injector Driver (EDU)
C3 Injector Driver (EDU)
C4 Injector Driver (EDU)
C5 Camshaft Timing Oil Control Valve Assembly (Bank 1 Exhaust Side)
C6 VVT Sensor (Camshaft Position Sensor) (Bank 1 Exhaust Side)
C7 Camshaft Timing Oil Control Valve Assembly (Bank 1 Intake Side)
C8 Fuel Injector Assembly (for Port Injection No. 1)
C9 Fuel Injector Assembly (for Port Injection No. 3)
C10 Fuel Pressure Sensor
C11 Fuel Injector Assembly (for Direct Injection No. 1)
C12 VVT Sensor (Camshaft Position Sensor) (Bank 1 Intake Side)
C13 Heated Oxygen Sensor (Bank 1 Sensor 2)
C14 Wide Range Air Fuel Ratio Sensor (Bank 1 Sensor 1)
C15 Throttle Body with Motor Assembly
C16 Intake Mass Air Flow Meter Sub-Assembly
C17 Compressor with Magnet Clutch
C18 VSV
C19 Fuel Injector Assembly (for Direct Injection No. 4)
C20 Fuel Injector Assembly (for Direct Injection No. 2)
C21 Oil Temperature Sensor
C22 Engine Oil Pressure Switch Assembly
C23 Camshaft Timing Oil Control Valve Assembly (Bank 2 Exhaust Side)
C24 Camshaft Timing Oil Control Valve Assembly (Bank 2 Intake Side)
C25 VVT Sensor (Camshaft Position Sensor) (Bank 2 Exhaust Side)
C26 VVT Sensor (Camshaft Position Sensor) (Bank 2 Intake Side)
C27 Ignition Coil Assembly No. 4
C28 Ignition Coil Assembly No. 2
C29 Spill Control Valve (Fuel Pump Assembly)
C30 Fuel Injector Assembly (for Port Injection No. 2)
C31 Fuel Injector Assembly (for Port Injection No. 4)
C33 Crankshaft Position Sensor
C34 Knock Control Sensor (Bank 2)
C35 E.F.I. Engine Coolant Temperature Sensor
C36 Knock Control Sensor (Bank 1)
C37 Fuel Injector Assembly (for Direct Injection No. 3)
C38 Ignition Coil Assembly No. 1
C39 Ignition Coil Assembly No. 3

Position of Parts in Engine Compartment

[LHD]

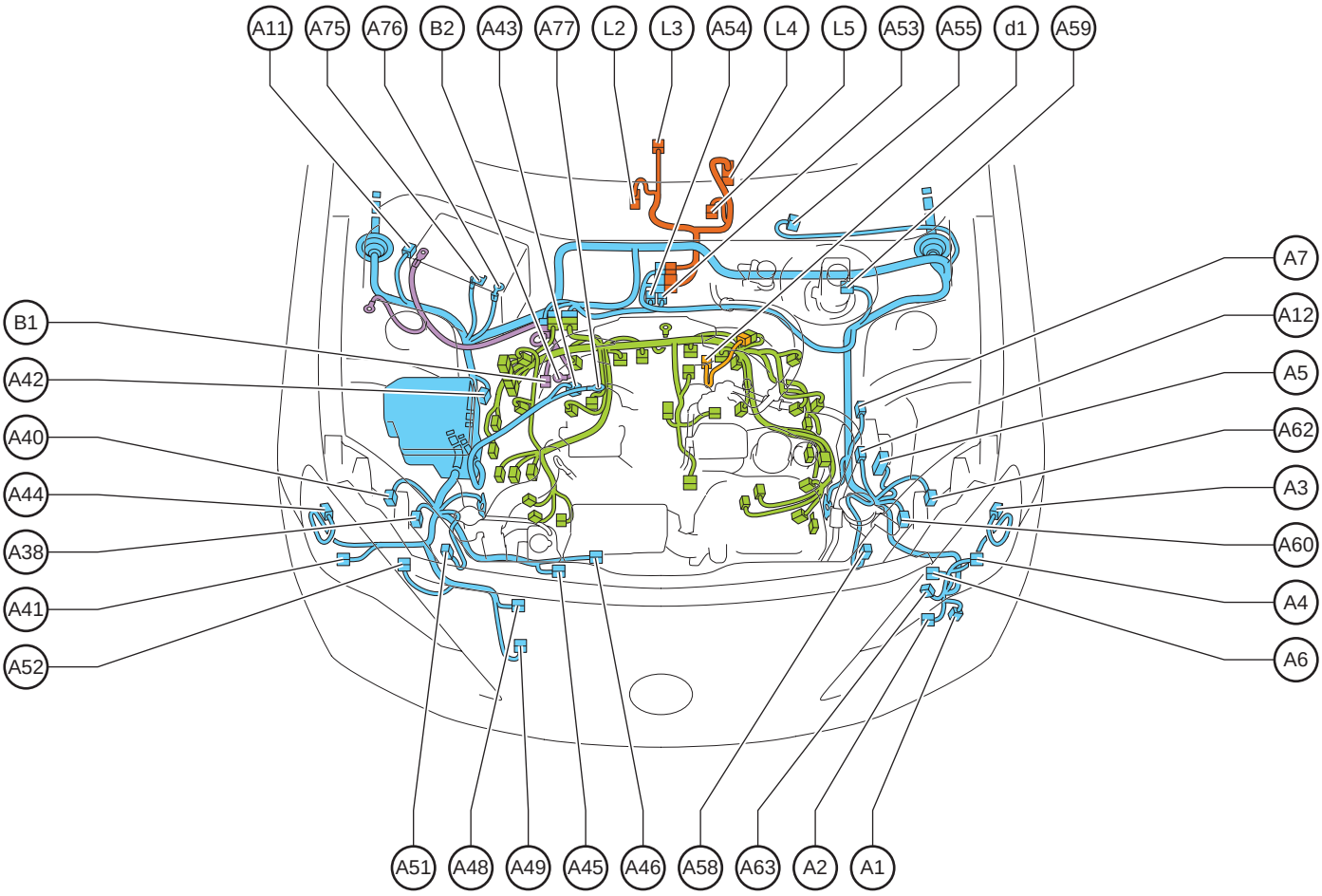

A1	Windshield Washer Motor and Pump Assembly
A2	Headlight Cleaner Washer Motor and Pump Assembly
A3	Side Turn Signal Light Assembly LH
A4	Headlight Assembly LH
A5	VSC (VDC) Control Module
A6	Headlight Cleaner Control Relay
A7	Pressure Switch
A11	Battery Current Sensor Assembly
A12	Front Speed Sensor LH
A38	Headlight Assembly RH
A40	Headlight Assembly RH
A41	Headlight Assembly RH
A42	Front Speed Sensor RH
A43	Generator Assembly
A44	Side Turn Signal Light Assembly RH
A45	Cooling Fan Motor
A46	No. 2 Cooling Fan Motor
A48	Ambient Temperature Sensor (Thermistor Assembly)
A49	High Pitched Horn Assembly
A51	Front Sub Sensor RH
A52	Low Pitched Horn Assembly
A53	Back-Up Light Switch Assembly
A54	Park/Neutral Position Switch Assembly
A55	Front Wiper Motor and Link Assembly
A58	Front Sub Sensor LH
A59	Brake Fluid Level Warning Switch (Brake Master Cylinder Sub-Assembly)
A60	Headlight Assembly LH
A62	Headlight Assembly LH
A63	Wireless Door Lock Buzzer
A75	Fusible Link Block Assembly
A76	Fusible Link Block Assembly
A77	Generator Assembly
B1	Starter Assembly
B2	Starter Assembly
L2	Park/Neutral Position Switch Assembly
L3	Transmission Revolution Sensor (SP2)
L4	Electronically Controlled Transmission Solenoid
L5	Transmission Revolution Sensor (NT)
d1	CPC Solenoid

Position of Parts in Instrument Panel

[LHD]

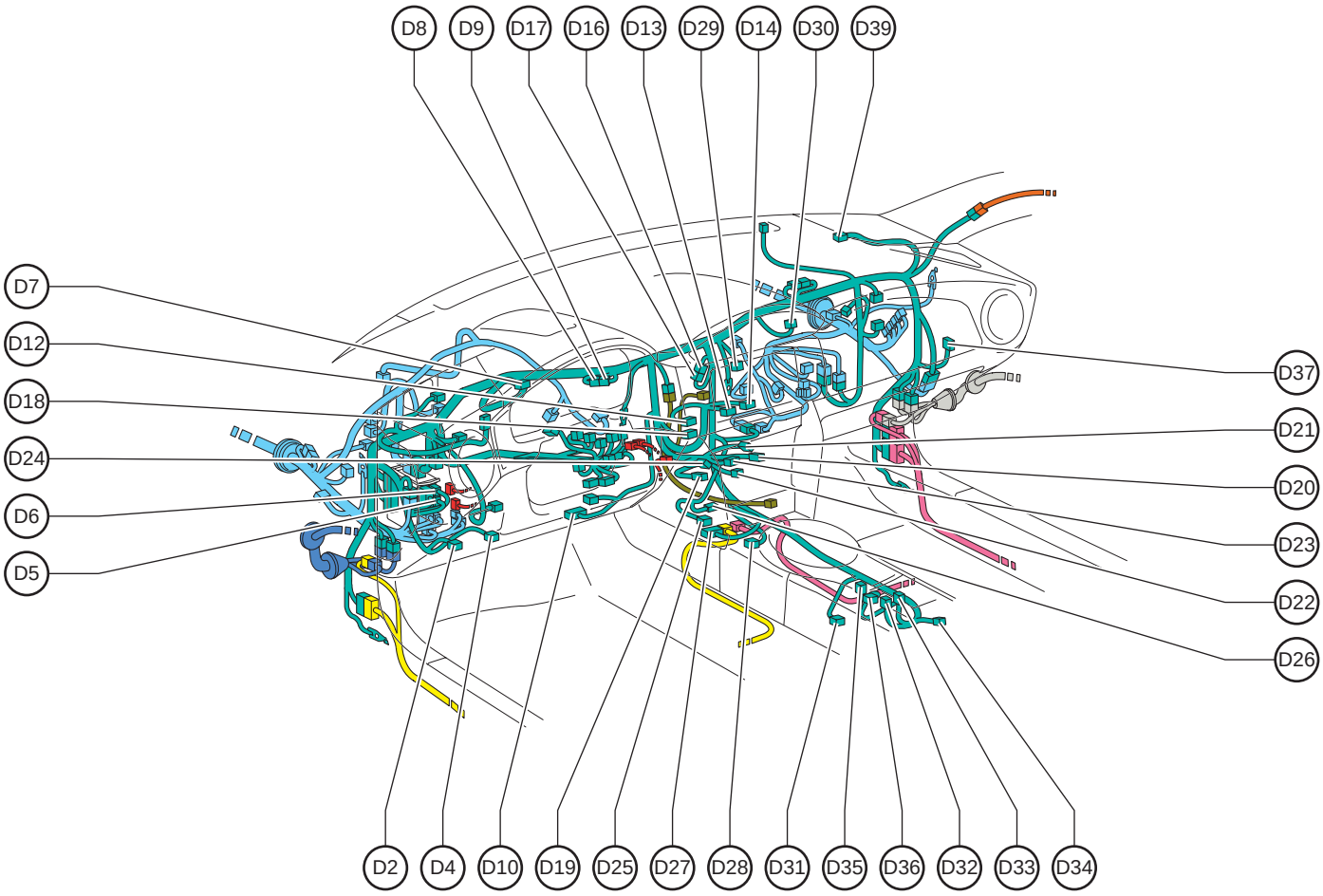

D2	Light Control Rheostat
D4	Luggage Door Opening Switch Assembly
D5	Main Body ECU
D6	Main Body ECU
D7	Combination Meter Assembly
D8	Junction Connector
D9	Junction Connector
D10	DLC3
D12	Radio Receiver Assembly
D13	Radio Receiver Assembly
D14	Radio Receiver Assembly
D16	Junction Connector
D17	Junction Connector
D18	Clock Assembly
D19	A/C Amplifier Assembly
D20	A/C Amplifier Assembly
D21	No. 1 Heater Control Sub-Assembly
D22	No. 3 Heater Control Sub-Assembly
D23	No. 3 Heater Control Sub-Assembly
D24	Heater Control Sub-Assembly
D25	Engine Switch
D26	Indoor Electrical Key Oscillator Assembly
D27	Airbag Control Module
D28	Shift Lever Position Sensor (Floor Shift Control Lever)
D29	Option Connector
D30	Passenger's Airbag Module
D31	Parking Brake Switch Assembly
D32	Seat Heater Switch LH
D33	Seat Heater Switch RH
D34	No. 2 Power Outlet Socket Assembly
D35	Pattern Select Switch Assembly
D36	Shift Position Indicator
D37	Airbag Cut Off Switch
D39	Front No. 2 Speaker Assembly RH

Position of Parts in Instrument Panel

[LHD]

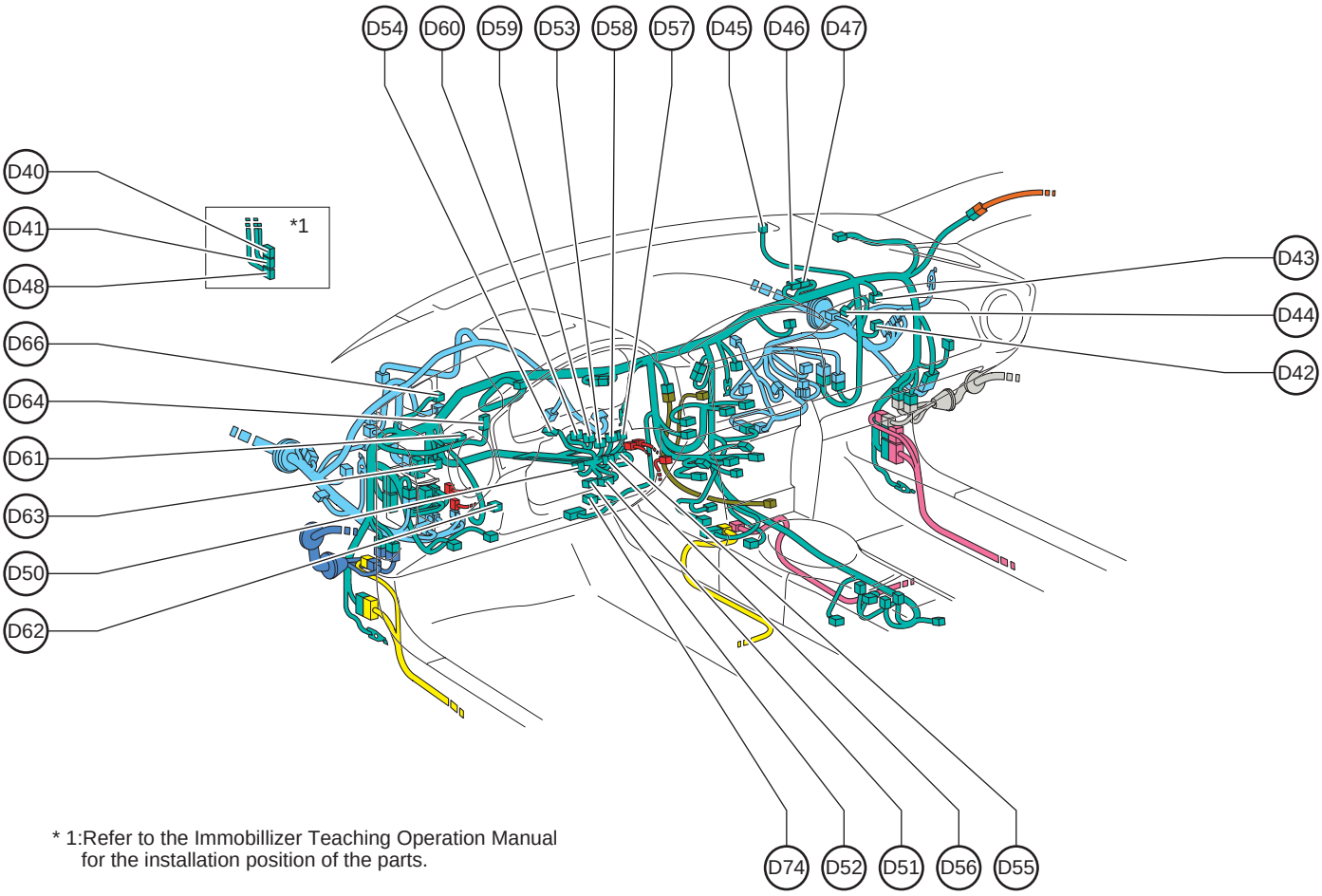

* 1:Refer to the Immobillizer Teaching Operation Manual for the installation position of the parts.

D40	Certification ECU Assembly
D41	Certification ECU Assembly
D42	Shift Lock Release Button Cover
D43	Junction Connector
D44	No. 1 Power Outlet Socket Assembly
D45	Automatic Light Control Sensor
D46	Junction Connector
D47	Junction Connector
D48	Certification ECU Assembly
D50	Headlight Dimmer Switch Assembly
D51	Roll Connector
D52	Roll Connector
D53	Un-Lock Warning Switch Assembly (Ignition Switch Lock Cylinder Assembly)
D54	Transponder Key Amplifier
D55	Ignition or Starter Switch Assembly
D56	Steering Sensor
D57	Windshield Wiper Switch Assembly
D58	Windshield Wiper Switch Assembly
D59	Steering Lock Actuator Assembly
D60	Key Inter Lock Solenoid (Ignition Switch Lock Cylinder Assembly)
D61	Turn Signal Flasher Assembly
D62	Driver's Knee Airbag Module
D63	Option Connector
D64	Trip Switch
D66	Front No. 2 Speaker Assembly LH
D74	No. 1 Cooler Thermistor

Position of Parts in Instrument Panel

[LHD]

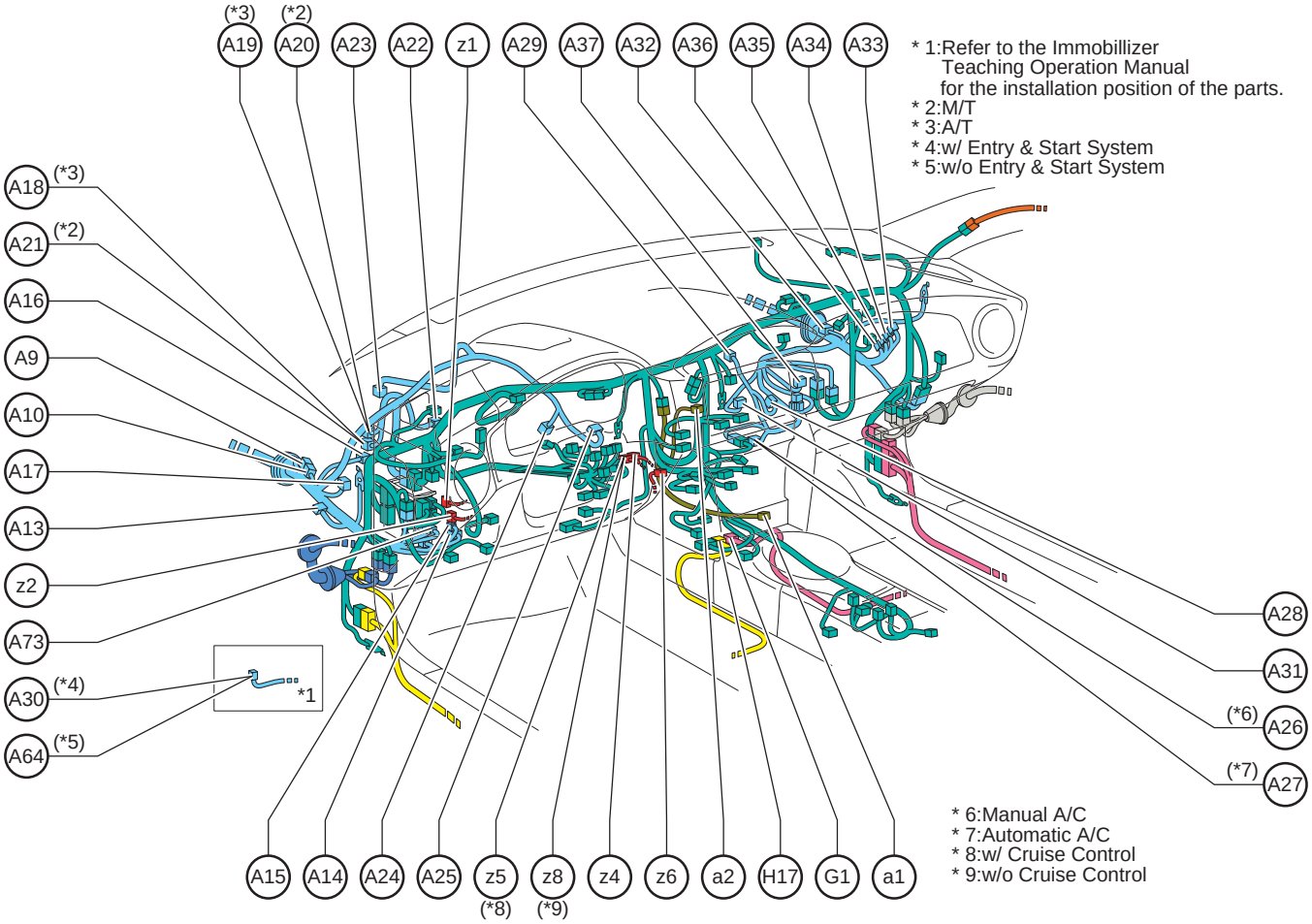

A9	Junction Connector
A10	Junction Connector
A13	Noise Filter
A14	Power Steering ECU Assembly
A15	Power Steering ECU Assembly
A16	Headlight Leveling ECU
A17	Junction Connector
A18	Transmission Control Module
A19	Transmission Control Module
A20	Clutch Start Switch Assembly
A21	Clutch Switch Assembly
A22	Stop Light Switch Assembly
A23	Accelerator Pedal Sensor Assembly
A24	No. 1 A/C Radiator Damper Servo Sub-Assembly
A25	Cooler Thermistor (Room Temperature Sensor)
A26	Blower Resistor
A27	Blower Assembly
A28	No. 3 A/C Radiator Damper Servo Sub-Assembly
A29	No. 4 A/C Radiator Damper Servo Sub-Assembly
A30	ID Code Box
A31	Blower with Fan Motor Sub-Assembly
A32	No. 5 A/C Radiator Damper Servo Sub-Assembly
A33	ECM
A34	ECM
A35	ECM
A36	ECM
A37	Junction Connector
A64	Transponder Key ECU Assembly
A73	Main Body ECU
G1	Airbag Control Module
H17	Airbag Control Module
a1	No. 1 Stereo Jack Adapter Assembly
a2	Radio Receiver Assembly
z1	Power Steering ECU Assembly Steering Column Assembly
z2	Power Steering ECU Assembly Steering Column Assembly
z4	Roll Connector Paddle Shift Switch
z5	Roll Connector Cruise Control Main Switch
z6	Roll Connector Driver's Airbag Module
z8	Roll Connector Horn Button Assembly

Position of Parts in Body

[LHD]

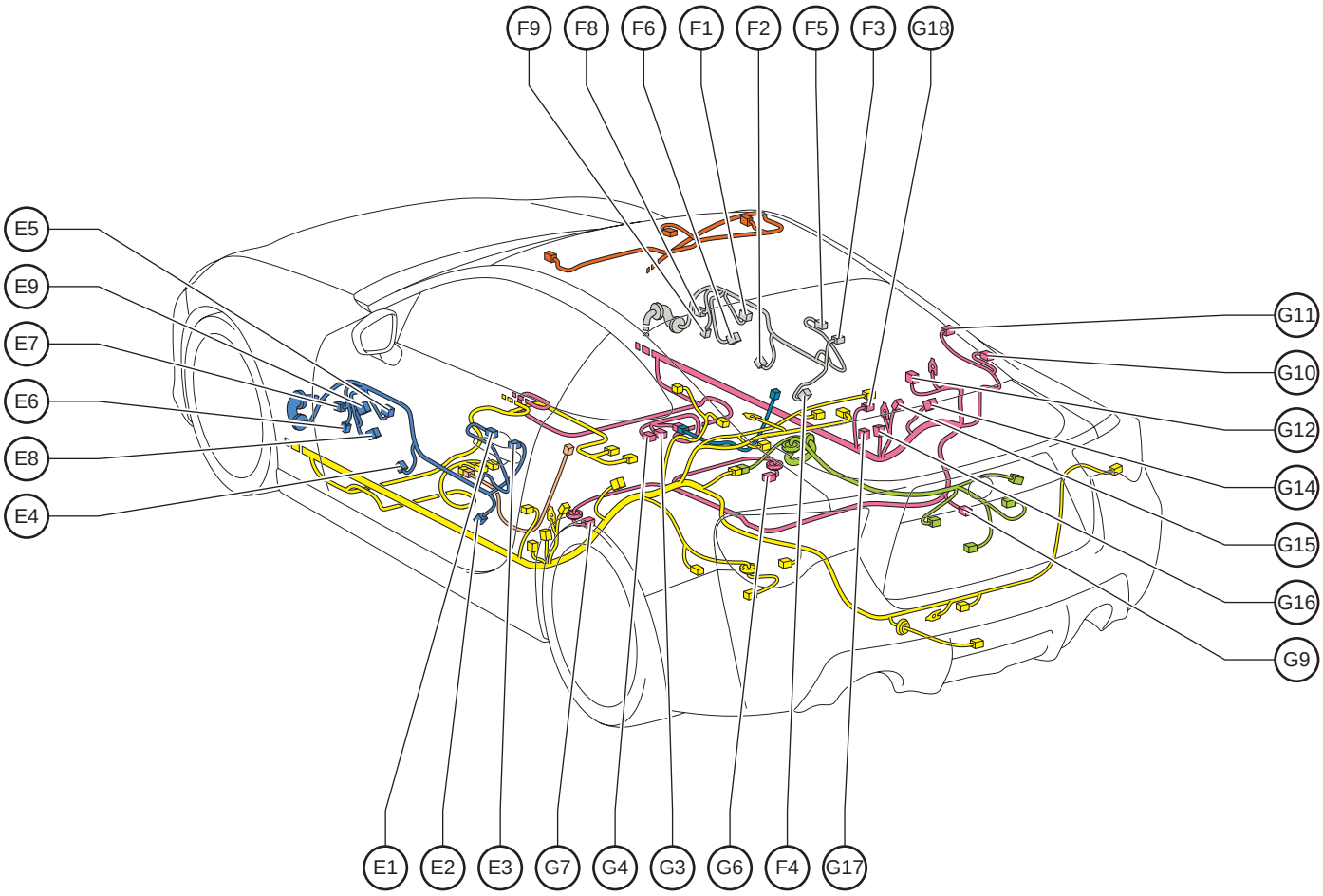

E1 Electrical Key Antenna LH
(Front Door Outside Handle Assembly LH)
E2 Front Courtesy Light Assembly LH
E3 Door Lock with Motor Assembly LH
E4 Front Door Impact Sensor LH
E5 Power Window Regulator Motor Assembly LH
E6 Front No. 1 Speaker Assembly LH
E7 Outer Rear View Mirror Assembly LH
E8 Power Window Regulator Master Switch Assembly
E9 Outer Mirror Switch Assembly

F1 Power Window Regulator Motor Assembly RH
F2 Front Door Impact Sensor RH
F3 Door Lock with Motor Assembly RH
F4 Front Courtesy Light Assembly RH
F5 Electrical Key Antenna RH
(Front Door Outside Handle Assembly RH)
F6 Power Window Regulator Switch Assembly
F8 Outer Rear View Mirror Assembly RH
F9 Front No. 1 Speaker Assembly RH

G3 Front Seat Inner Belt Assembly RH
G4 Seat Heater RH
G6 No. 2 Fuel Sender Gage Assembly
G7 Fuel Sender Gage Assembly
G9 Rear Speed Sensor RH
G10 Rear Window Defogger (Back Window Glass)
G11 Curtain Airbag Module RH
G12 Fuel Pump Control ECU Assembly
G14 Curtain Airbag Sensor RH
G15 Rear Speaker Assembly RH
G16 Side Airbag Sensor RH
G17 Pretensioner RH
G18 Front Door Courtesy Light Switch Assembly RH

Position of Parts in Body

[LHD]

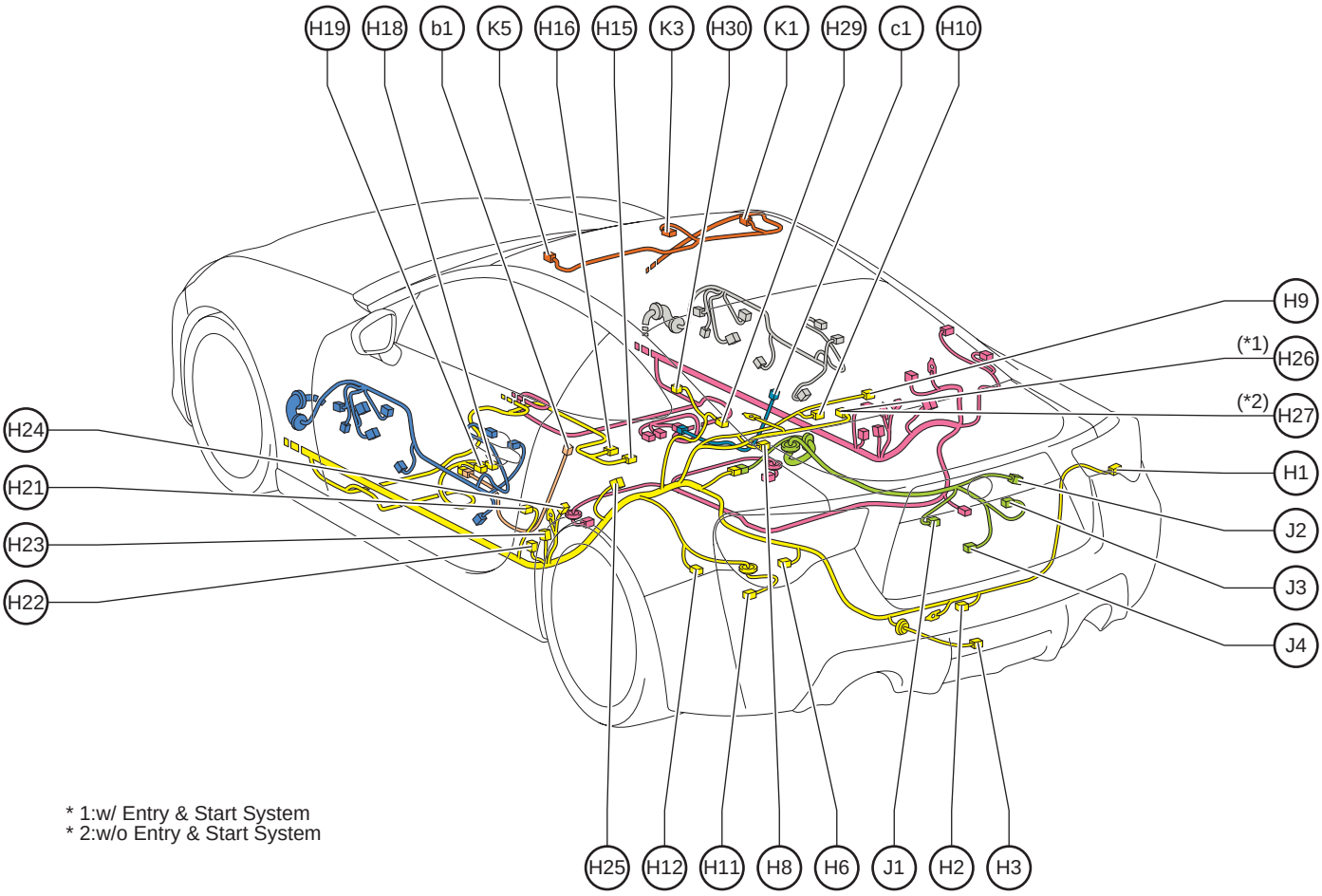

* 1:w/ Entry & Start System
* 2:w/o Entry & Start System

H1	Rear Combination Light Lens and Body RH
H2	Rear Fog Light Assembly (Back-Up Light Lens and Body)
H3	Rear Electrical Key Antenna
H6	Rear Combination Light Lens and Body LH
H8	No. 1 Luggage Compartment Light Assembly
H9	No. 2 Indoor Electrical Key Oscillator Assembly
H10	Center Stop Light Assembly
H11	Rear Height Control Sensor Sub-Assembly LH
H12	Rear Speed Sensor LH
H15	No. 3 Indoor Electrical Key Oscillator Assembly
H16	Satellite Safing Sensor
H18	Seat Heater LH
H19	Front Seat Inner Belt Assembly LH
H21	Front Door Courtesy Light Switch Assembly LH
H22	Pretensioner LH
H23	Side Airbag Sensor LH
H24	Rear Speaker Assembly LH
H25	Curtain Airbag Sensor LH
H26	Door Control Receiver
H27	Door Control Receiver
H29	Rear Window Defogger (Back Window Glass)
H30	Curtain Airbag Module LH
J1	License Plate Light Lens LH
J2	Back Door Opener Switch Assembly
J3	Luggage Compartment Door Striker Assembly
J4	License Plate Light Lens RH
K1	Vanity Light Assembly RH (Visor Assembly RH)
K3	Map Light Assembly
K5	Vanity Light Assembly LH (Visor Assembly LH)
b1	Side Airbag Module LH
c1	Side Airbag Module RH

Position of Parts in Engine Compartment

[RHD]

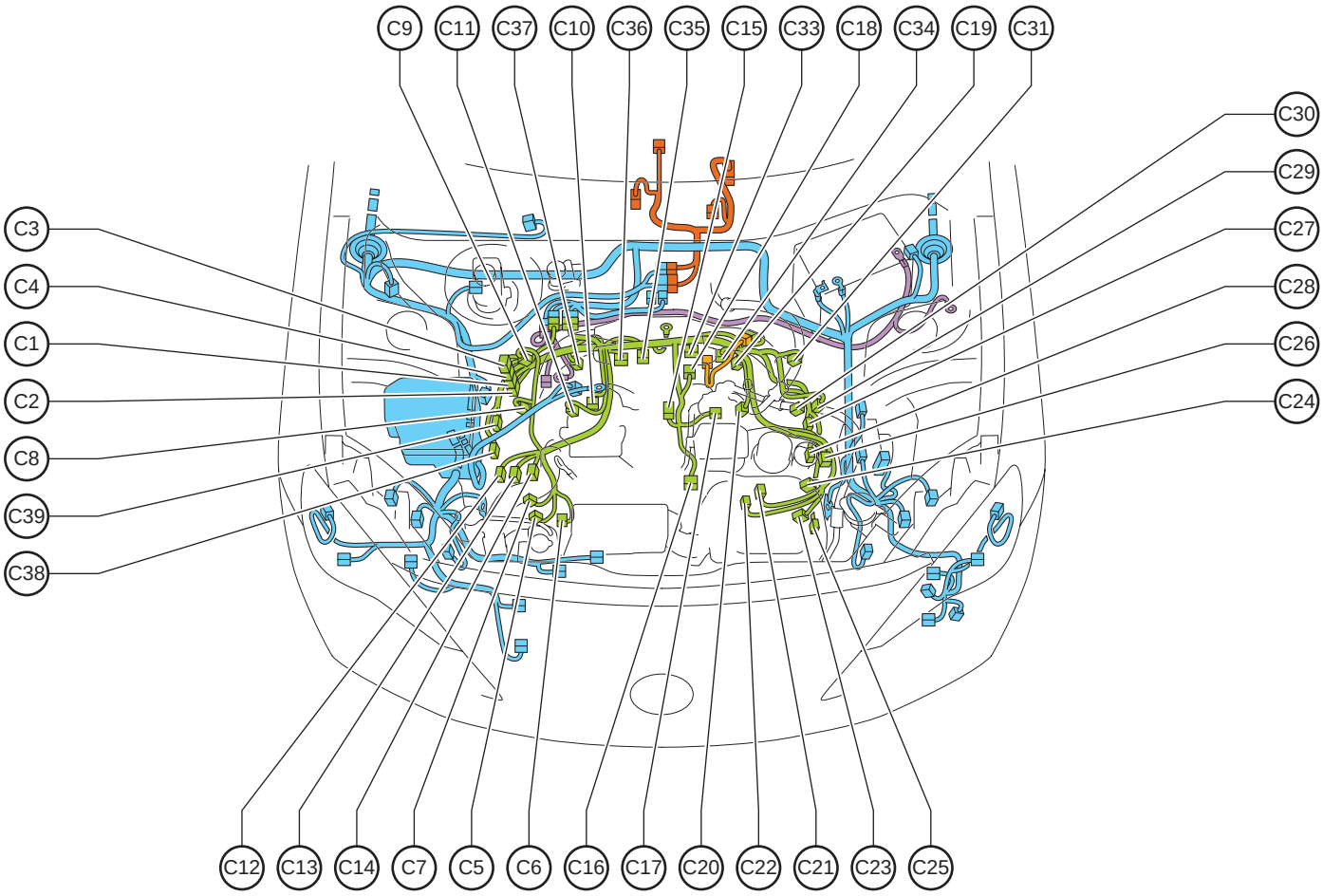

C1 Injector Driver (EDU)
C2 Injector Driver (EDU)
C3 Injector Driver (EDU)
C4 Injector Driver (EDU)
C5 Camshaft Timing Oil Control Valve Assembly (Bank 1 Exhaust Side)
C6 VVT Sensor (Camshaft Position Sensor) (Bank 1 Exhaust Side)
C7 Camshaft Timing Oil Control Valve Assembly (Bank 1 Intake Side)
C8 Fuel Injector Assembly (for Port Injection No. 1)
C9 Fuel Injector Assembly (for Port Injection No. 3)
C10 Fuel Pressure Sensor
C11 Fuel Injector Assembly (for Direct Injection No. 1)
C12 VVT Sensor (Camshaft Position Sensor) (Bank 1 Intake Side)
C13 Heated Oxygen Sensor (Bank 1 Sensor 2)
C14 Wide Range Air Fuel Ratio Sensor (Bank 1 Sensor 1)
C15 Throttle Body with Motor Assembly
C16 Intake Mass Air Flow Meter Sub-Assembly
C17 Compressor with Magnet Clutch
C18 VSV
C19 Fuel Injector Assembly (for Direct Injection No. 4)
C20 Fuel Injector Assembly (for Direct Injection No. 2)
C21 Oil Temperature Sensor
C22 Engine Oil Pressure Switch Assembly
C23 Camshaft Timing Oil Control Valve Assembly (Bank 2 Exhaust Side)
C24 Camshaft Timing Oil Control Valve Assembly (Bank 2 Intake Side)
C25 VVT Sensor (Camshaft Position Sensor) (Bank 2 Exhaust Side)
C26 VVT Sensor (Camshaft Position Sensor) (Bank 2 Intake Side)
C27 Ignition Coil Assembly No. 4
C28 Ignition Coil Assembly No. 2
C29 Spill Control Valve (Fuel Pump Assembly)
C30 Fuel Injector Assembly (for Port Injection No. 2)
C31 Fuel Injector Assembly (for Port Injection No. 4)
C33 Crankshaft Position Sensor
C34 Knock Control Sensor (Bank 2)
C35 E.F.I. Engine Coolant Temperature Sensor
C36 Knock Control Sensor (Bank 1)
C37 Fuel Injector Assembly (for Direct Injection No. 3)
C38 Ignition Coil Assembly No. 1
C39 Ignition Coil Assembly No. 3

Position of Parts in Engine Compartment

[RHD]

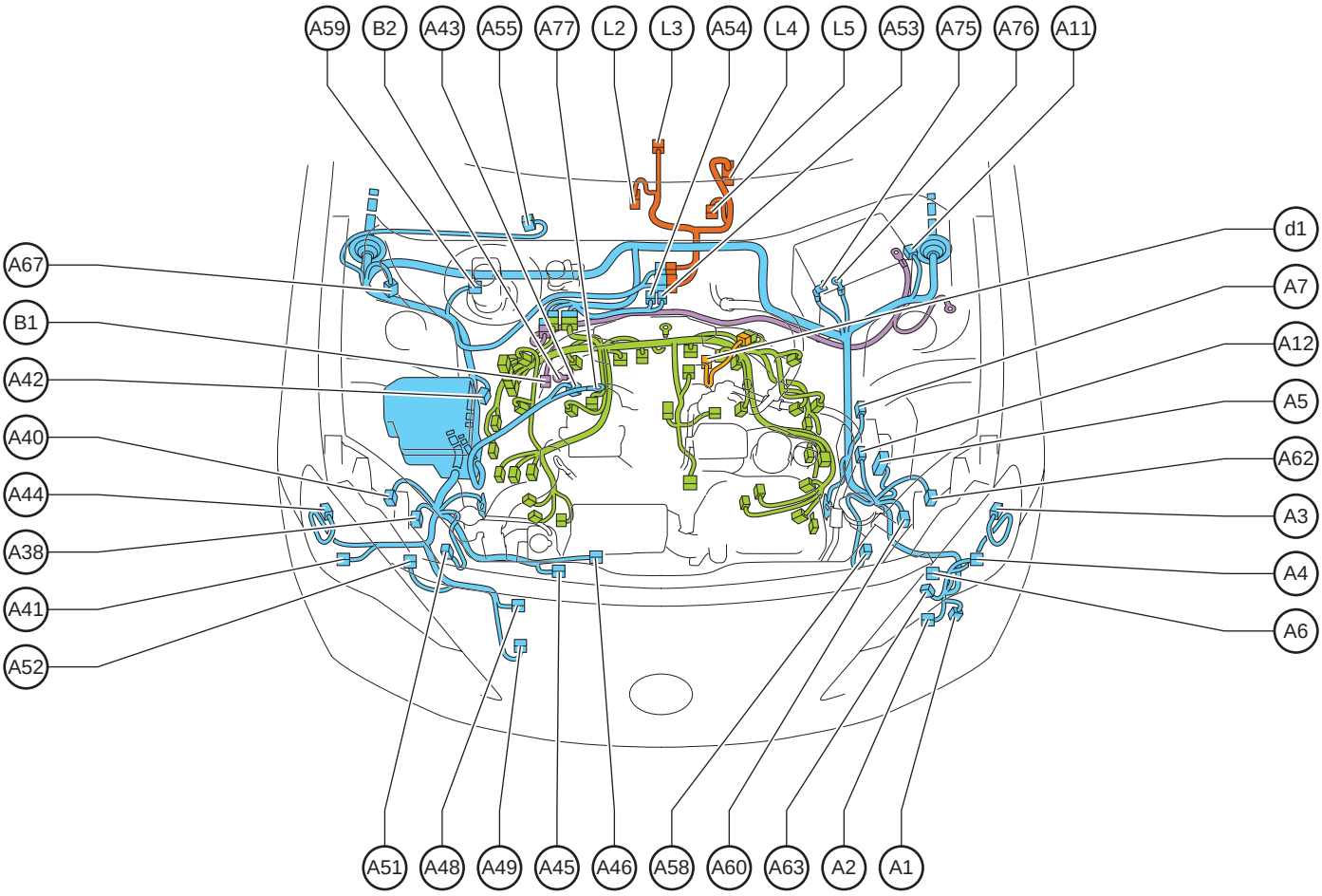

A1	Windshield Washer Motor and Pump Assembly
A2	Headlight Cleaner Washer Motor and Pump Assembly
A3	Side Turn Signal Light Assembly LH
A4	Headlight Assembly LH
A5	VSC (VDC) Control Module
A6	Headlight Cleaner Control Relay
A7	Pressure Switch
A11	Battery Current Sensor Assembly
A12	Front Speed Sensor LH
A38	Headlight Assembly RH
A40	Headlight Assembly RH
A41	Headlight Assembly RH
A42	Front Speed Sensor RH
A43	Generator Assembly
A44	Side Turn Signal Light Assembly RH
A45	Cooling Fan Motor
A46	No. 2 Cooling Fan Motor
A48	Ambient Temperature Sensor (Thermistor Assembly)
A49	High Pitched Horn Assembly
A51	Front Sub Sensor RH
A52	Low Pitched Horn Assembly
A53	Back-Up Light Switch Assembly
A54	Park/Neutral Position Switch Assembly
A55	Front Wiper Motor and Link Assembly
A58	Front Sub Sensor LH
A59	Brake Fluid Level Warning Switch (Brake Master Cylinder Sub-Assembly)
A60	Headlight Assembly LH
A62	Headlight Assembly LH
A63	Wireless Door Lock Buzzer
A67	Alarm Kit
A75	Fusible Link Block Assembly
A76	Fusible Link Block Assembly
A77	Generator Assembly
B1	Starter Assembly
B2	Starter Assembly
L2	Park/Neutral Position Switch Assembly
L3	Transmission Revolution Sensor (SP2)
L4	Electronically Controlled Transmission Solenoid
L5	Transmission Revolution Sensor (NT)
d1	CPC Solenoid

Position of Parts in Instrument Panel

[RHD]

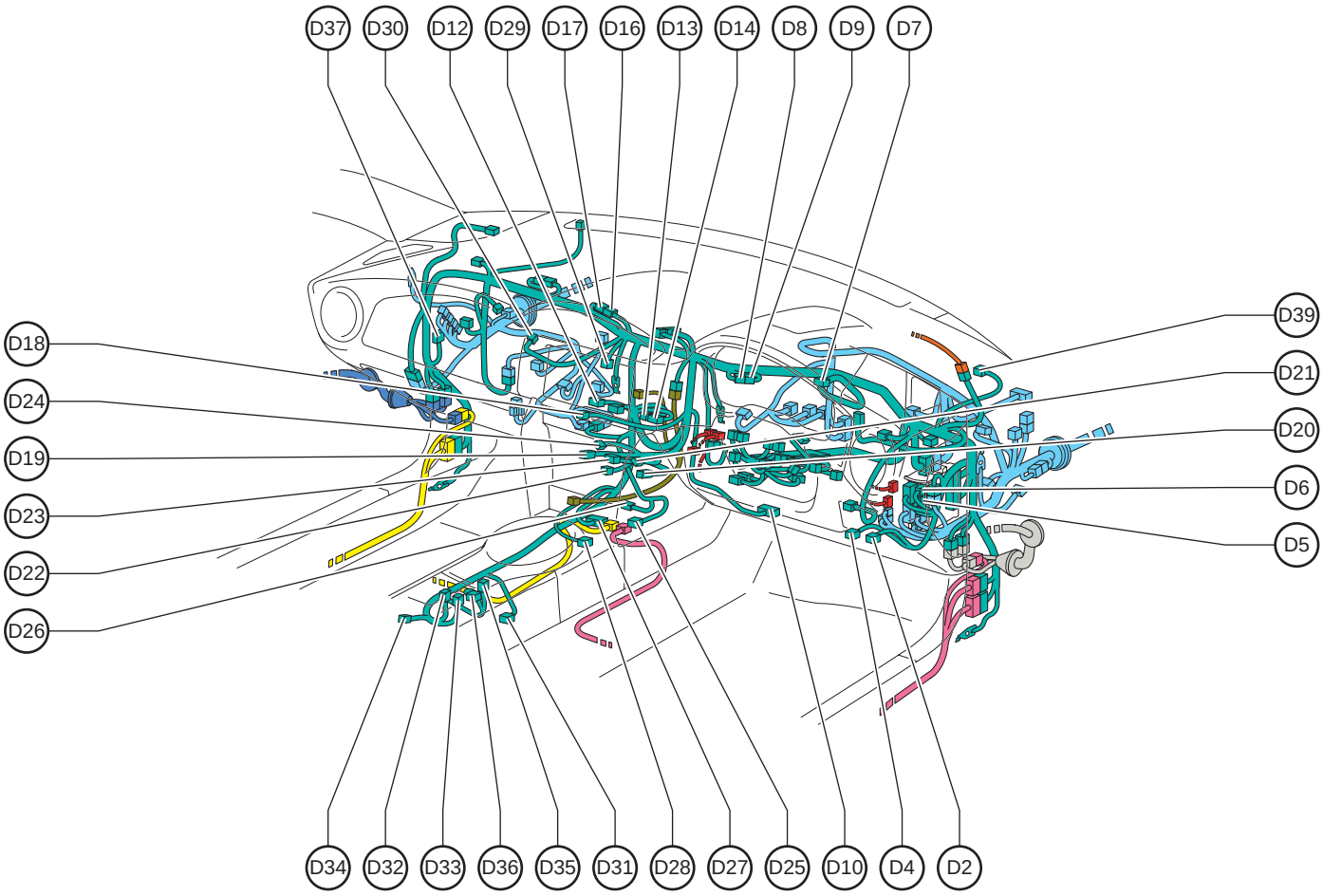

D2	Light Control Rheostat
D4	Luggage Door Opening Switch Assembly
D5	Main Body ECU
D6	Main Body ECU
D7	Combination Meter Assembly
D8	Junction Connector
D9	Junction Connector
D10	DLC3
D12	Radio Receiver Assembly
D13	Radio Receiver Assembly
D14	Radio Receiver Assembly
D16	Junction Connector
D17	Junction Connector
D18	Clock Assembly
D19	A/C Amplifier Assembly
D20	A/C Amplifier Assembly
D21	No. 1 Heater Control Sub-Assembly
D22	No. 3 Heater Control Sub-Assembly
D23	No. 3 Heater Control Sub-Assembly
D24	Heater Control Sub-Assembly
D25	Engine Switch
D26	Indoor Electrical Key Oscillator Assembly
D27	Airbag Control Module
D28	Shift Lever Position Sensor (Floor Shift Control Lever)
D29	Option Connector
D30	Passenger's Airbag Module
D31	Parking Brake Switch Assembly
D32	Seat Heater Switch LH
D33	Seat Heater Switch RH
D34	No. 2 Power Outlet Socket Assembly
D35	Pattern Select Switch Assembly
D36	Shift Position Indicator
D37	Airbag Cut Off Switch
D39	Front No. 2 Speaker Assembly RH

Position of Parts in Instrument Panel

[RHD]

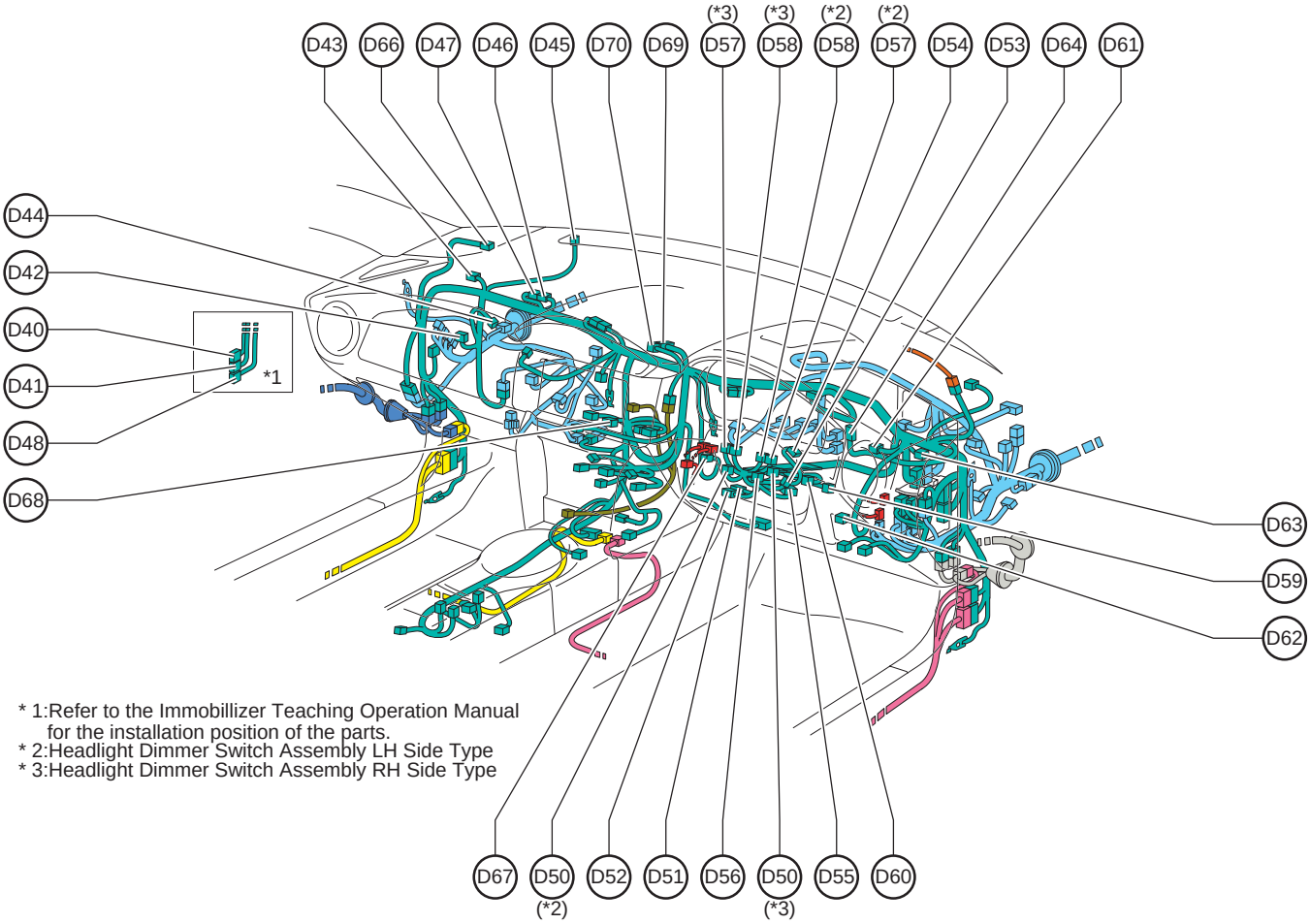

* 1:Refer to the Immobillizer Teaching Operation Manual for the installation position of the parts.
* 2:Headlight Dimmer Switch Assembly LH Side Type
* 3:Headlight Dimmer Switch Assembly RH Side Type

D40	Certification ECU Assembly
D41	Certification ECU Assembly
D42	Shift Lock Release Button Cover
D43	Junction Connector
D44	No. 1 Power Outlet Socket Assembly
D45	Automatic Light Control Sensor
D46	Junction Connector
D47	Junction Connector
D48	Certification ECU Assembly
D50	Headlight Dimmer Switch Assembly
D51	Roll Connector
D52	Roll Connector
D53	Un-Lock Warning Switch Assembly (Ignition Switch Lock Cylinder Assembly)
D54	Transponder Key Amplifier
D55	Ignition or Starter Switch Assembly
D56	Steering Sensor
D57	Windshield Wiper Switch Assembly
D58	Windshield Wiper Switch Assembly
D59	Steering Lock Actuator Assembly
D60	Key Inter Lock Solenoid (Ignition Switch Lock Cylinder Assembly)
D61	Turn Signal Flasher Assembly
D62	Driver's Knee Airbag Module
D63	Option Connector
D64	Trip Switch
D66	Front No. 2 Speaker Assembly LH
D67	No. 1 Cooler Thermistor
D68	Option Connector
D69	Alarm Control Unit
D70	Alarm Control Unit

Position of Parts in Instrument Panel

[RHD]

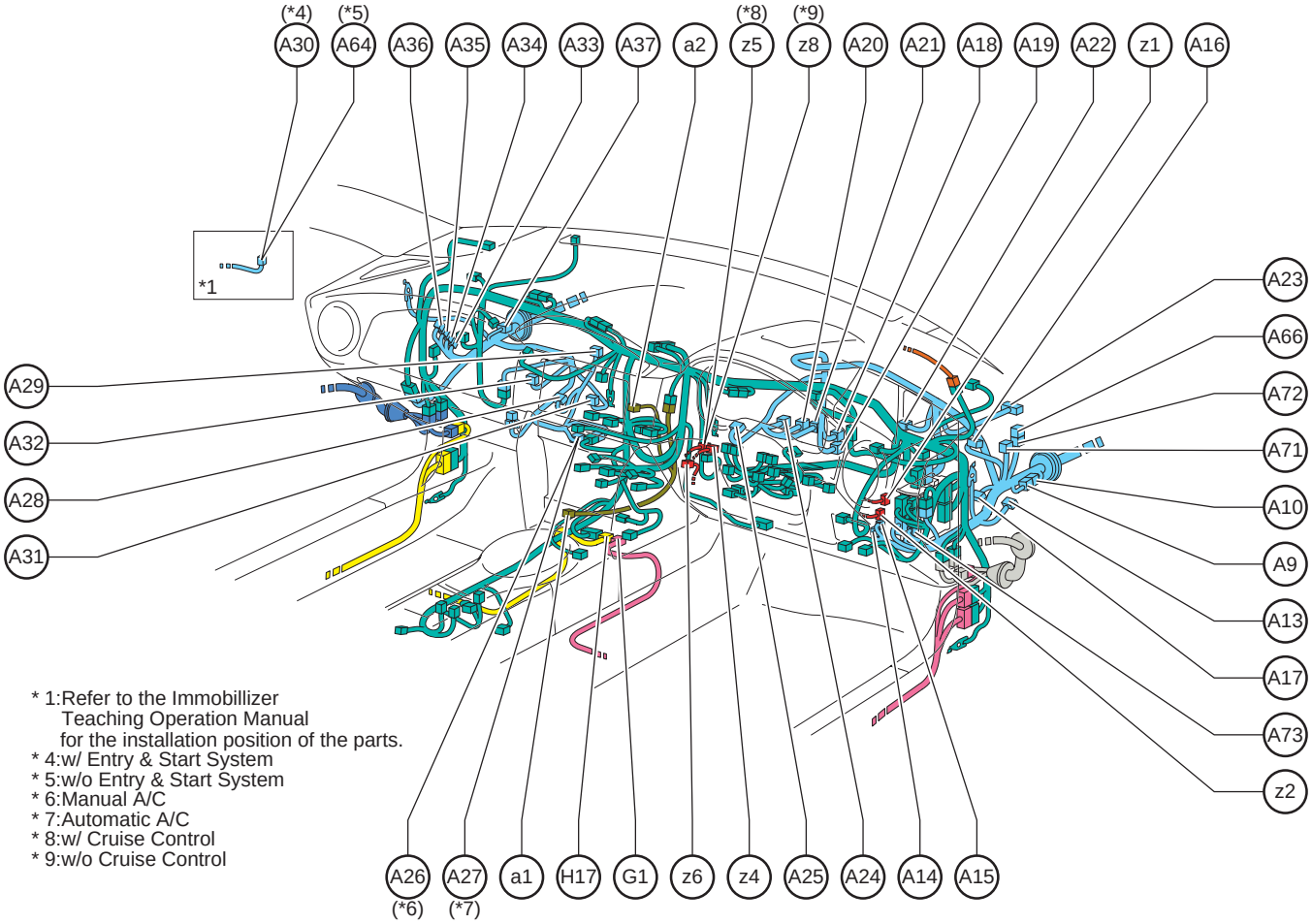

A9	Junction Connector
A10	Junction Connector
A13	Noise Filter
A14	Power Steering ECU Assembly
A15	Power Steering ECU Assembly
A16	Headlight Leveling ECU
A17	Junction Connector
A18	Transmission Control Module
A19	Transmission Control Module
A20	Clutch Start Switch Assembly
A21	Clutch Switch Assembly
A22	Stop Light Switch Assembly
A23	Accelerator Pedal Sensor Assembly
A24	No. 1 A/C Radiator Damper Servo Sub-Assembly
A25	Cooler Thermistor (Room Temperature Sensor)
A26	Blower Resistor
A27	Blower Assembly
A28	No. 3 A/C Radiator Damper Servo Sub-Assembly
A29	No. 4 A/C Radiator Damper Servo Sub-Assembly
A30	ID Code Box
A31	Blower with Fan Motor Sub-Assembly
A32	No. 5 A/C Radiator Damper Servo Sub-Assembly
A33	ECM
A34	ECM
A35	ECM
A36	ECM
A37	Junction Connector
A64	Transponder Key ECU Assembly
A66	Short Connector
A71	Alarm Kit
A72	Short Connector
A73	Main Body ECU
G1	Airbag Control Module
H17	Airbag Control Module
a1	No. 1 Stereo Jack Adapter Assembly
a2	Radio Receiver Assembly
z1	Power Steering ECU Assembly Steering Column Assembly
z2	Power Steering ECU Assembly Steering Column Assembly
z4	Roll Connector Paddle Shift Switch
z5	Roll Connector Cruise Control Main Switch
z6	Roll Connector Driver's Airbag Module
z8	Roll Connector Horn Button Assembly

Position of Parts in Body

[RHD]

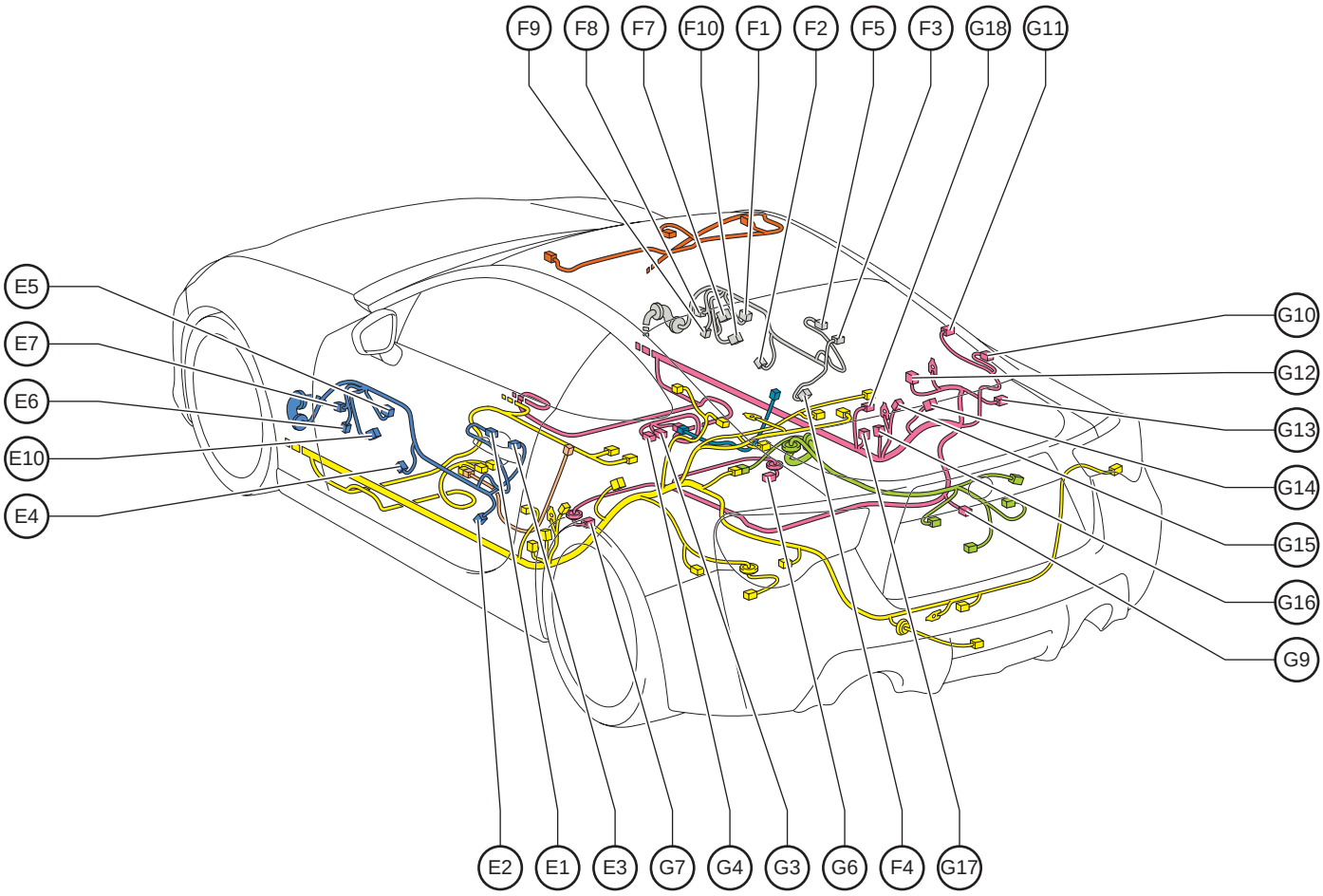

E1 Electrical Key Antenna LH
(Front Door Outside Handle Assembly LH)
E2 Front Courtesy Light Assembly LH
E3 Door Lock with Motor Assembly LH
E4 Front Door Impact Sensor LH
E5 Power Window Regulator Motor Assembly LH
E6 Front No. 1 Speaker Assembly LH
E7 Outer Rear View Mirror Assembly LH
E10 Power Window Regulator Switch Assembly

F1 Power Window Regulator Motor Assembly RH
F2 Front Door Impact Sensor RH
F3 Door Lock with Motor Assembly RH
F4 Front Courtesy Light Assembly RH
F5 Electrical Key Antenna RH
(Front Door Outside Handle Assembly RH)
F7 Outer Mirror Switch Assembly
F8 Outer Rear View Mirror Assembly RH
F9 Front No. 1 Speaker Assembly RH
F10 Power Window Regulator Master Switch Assembly

G3 Front Seat Inner Belt Assembly RH
G4 Seat Heater RH
G6 No. 2 Fuel Sender Gage Assembly
G7 Fuel Sender Gage Assembly
G9 Rear Speed Sensor RH
G10 Rear Window Defogger (Back Window Glass)
G11 Curtain Airbag Module RH
G12 Fuel Pump Control ECU Assembly
G13 Alarm Kit
G14 Curtain Airbag Sensor RH
G15 Rear Speaker Assembly RH
G16 Side Airbag Sensor RH
G17 Pretensioner RH
G18 Front Door Courtesy Light Switch Assembly RH

Position of Parts in Body

[RHD]

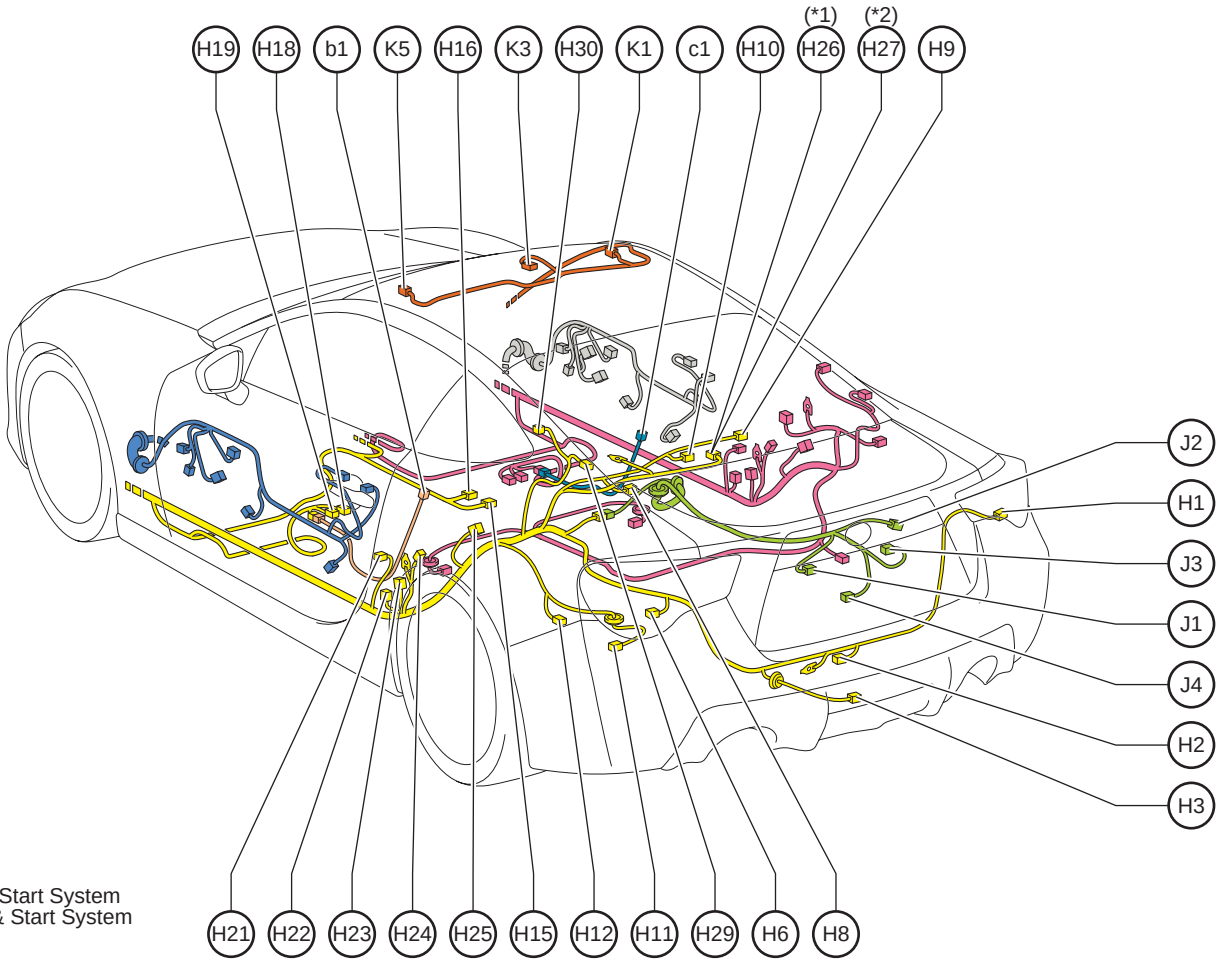

* 1:w/ Entry & Start System
* 2:w/o Entry & Start System

H1	Rear Combination Light Lens and Body RH
H2	Rear Fog Light Assembly (Back-Up Light Lens and Body)
H3	Rear Electrical Key Antenna
H6	Rear Combination Light Lens and Body LH
H8	No. 1 Luggage Compartment Light Assembly
H9	No. 2 Indoor Electrical Key Oscillator Assembly
H10	Center Stop Light Assembly
H11	Rear Height Control Sensor Sub-Assembly LH
H12	Rear Speed Sensor LH
H15	No. 3 Indoor Electrical Key Oscillator Assembly
H16	Satellite Safing Sensor
H18	Seat Heater LH
H19	Front Seat Inner Belt Assembly LH
H21	Front Door Courtesy Light Switch Assembly LH
H22	Pretensioner LH
H23	Side Airbag Sensor LH
H24	Rear Speaker Assembly LH
H25	Curtain Airbag Sensor LH
H26	Door Control Receiver
H27	Door Control Receiver
H29	Rear Window Defogger (Back Window Glass)
H30	Curtain Airbag Module LH
J1	License Plate Light Lens LH
J2	Back Door Opener Switch Assembly
J3	Luggage Compartment Door Striker Assembly
J4	License Plate Light Lens RH
K1	Vanity Light Assembly RH (Visor Assembly RH)
K3	Map Light Assembly
K5	Vanity Light Assembly LH (Visor Assembly LH)
b1	Side Airbag Module LH
c1	Side Airbag Module RH

▭ : Location of Connector Joining Wire Harness and Wire Harness
▽ : Location of Ground Points

[LHD]

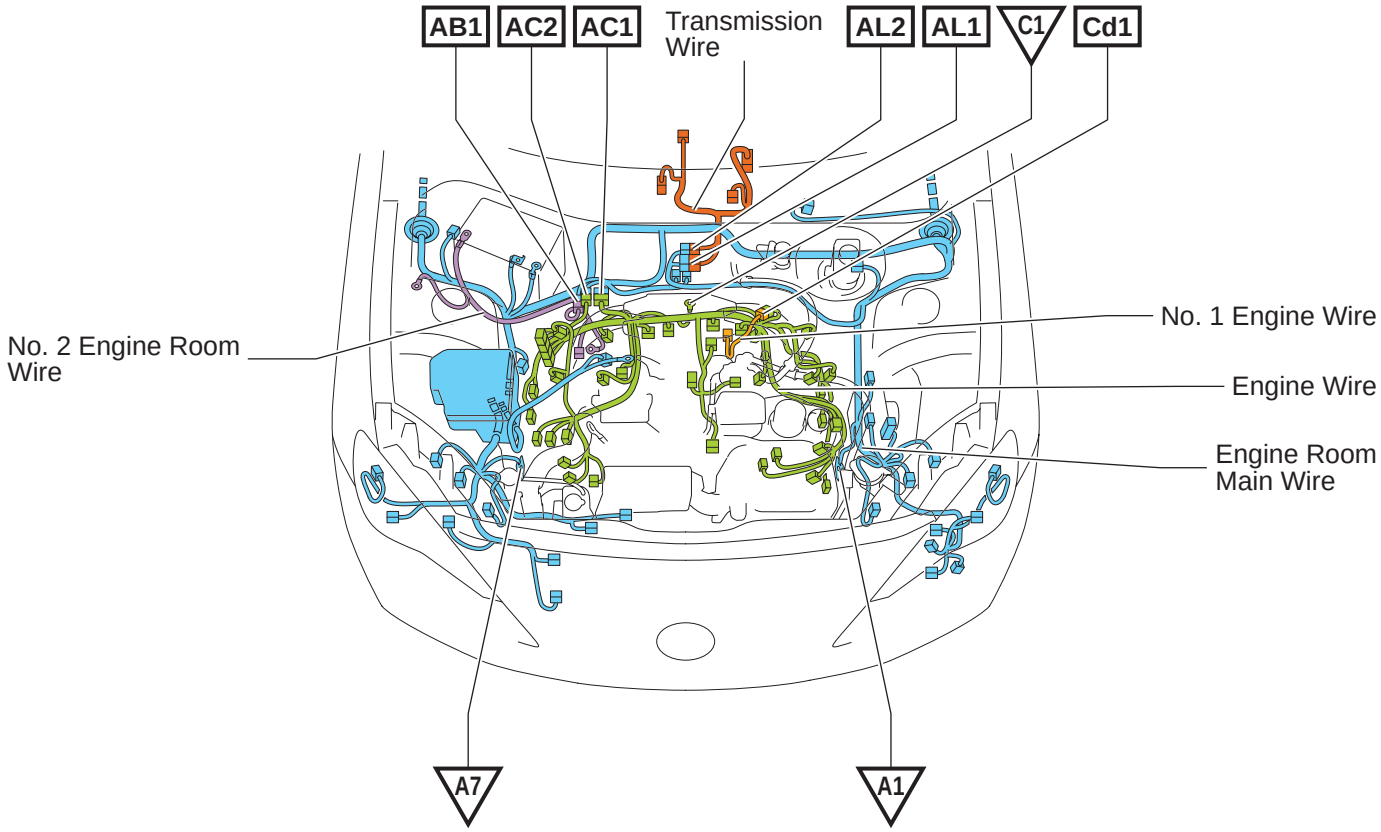

▭ : Location of Connector Joining Wire Harness and Wire Harness

[LHD]

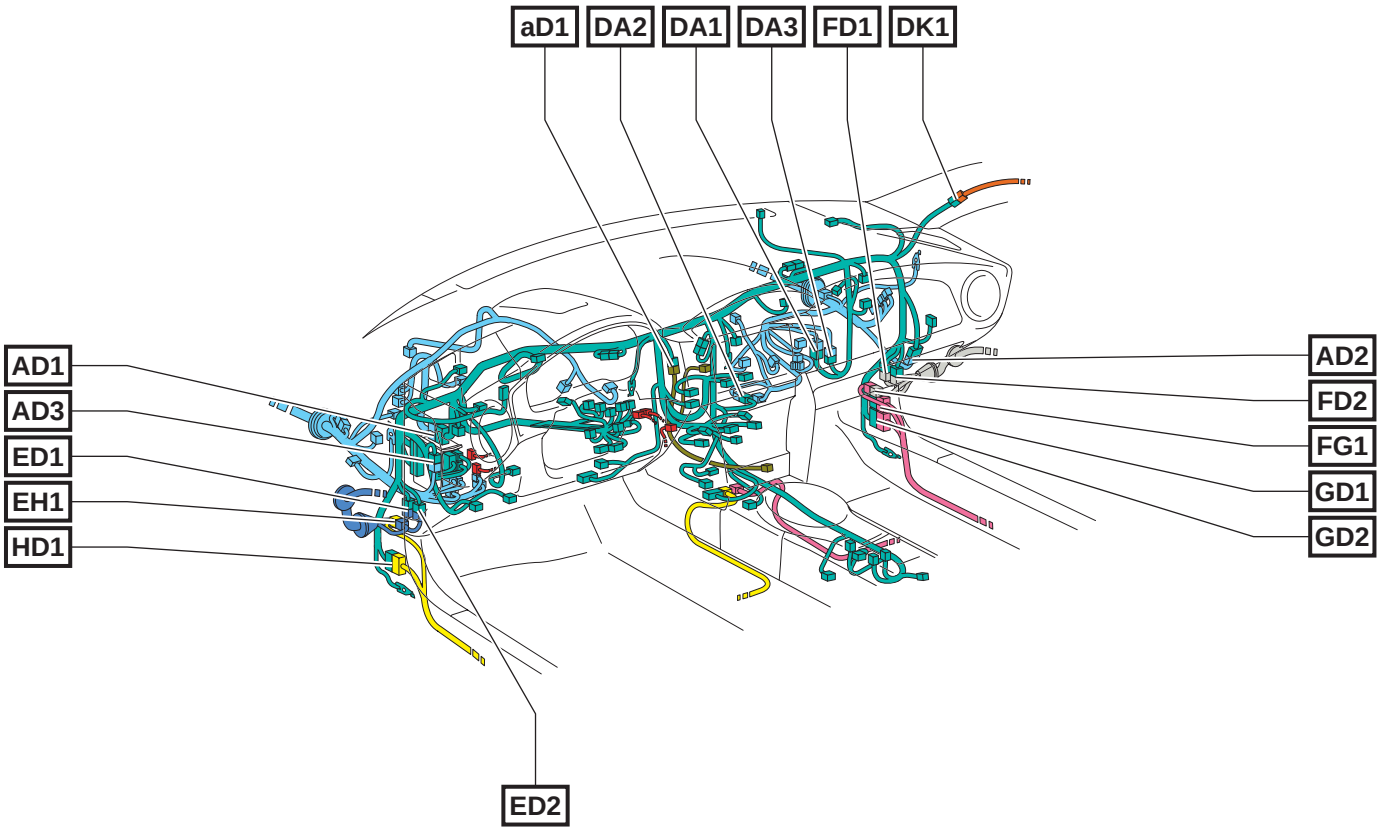

▽ : Location of Ground Points

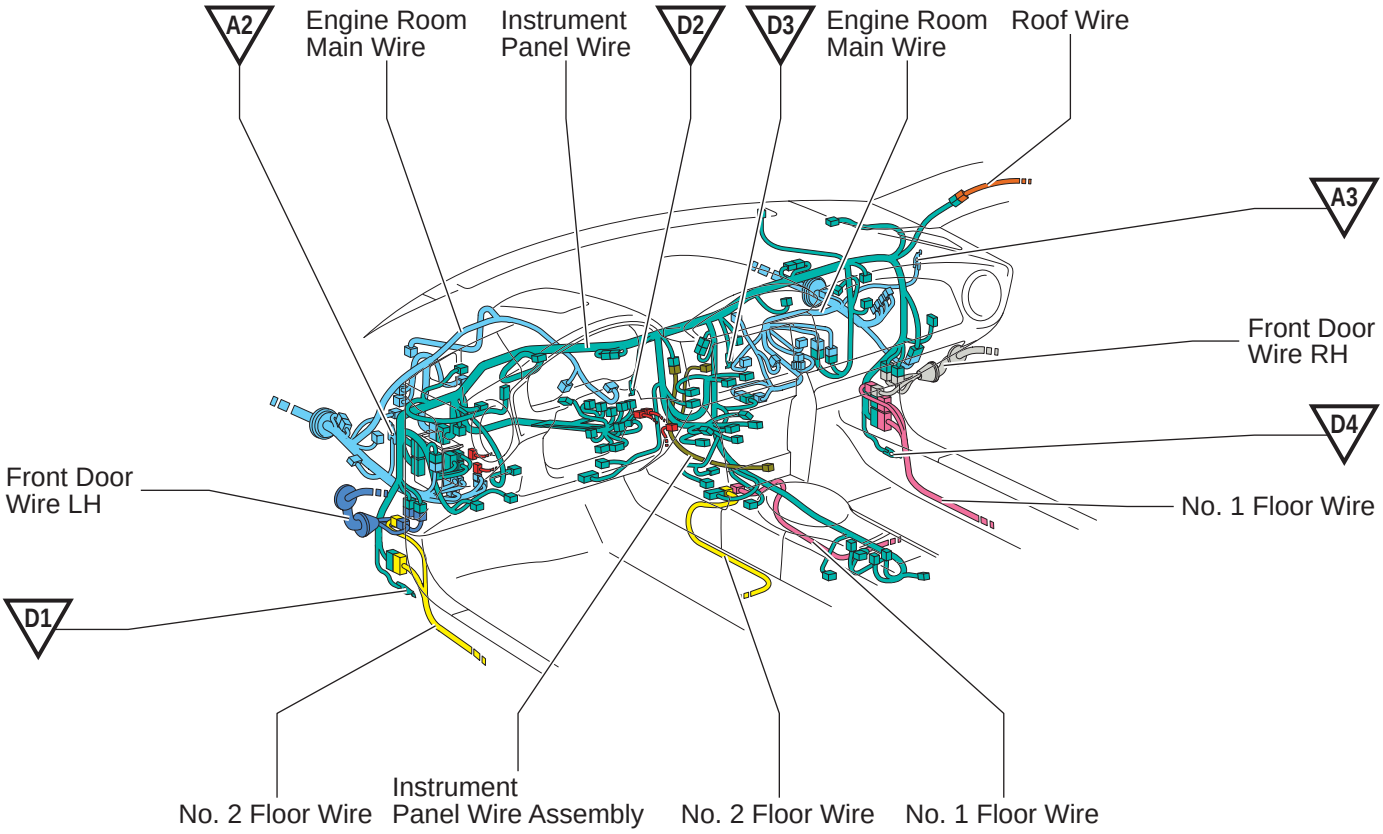

▭ : Location of Connector Joining Wire Harness and Wire Harness
▽ : Location of Ground Points

[LHD]

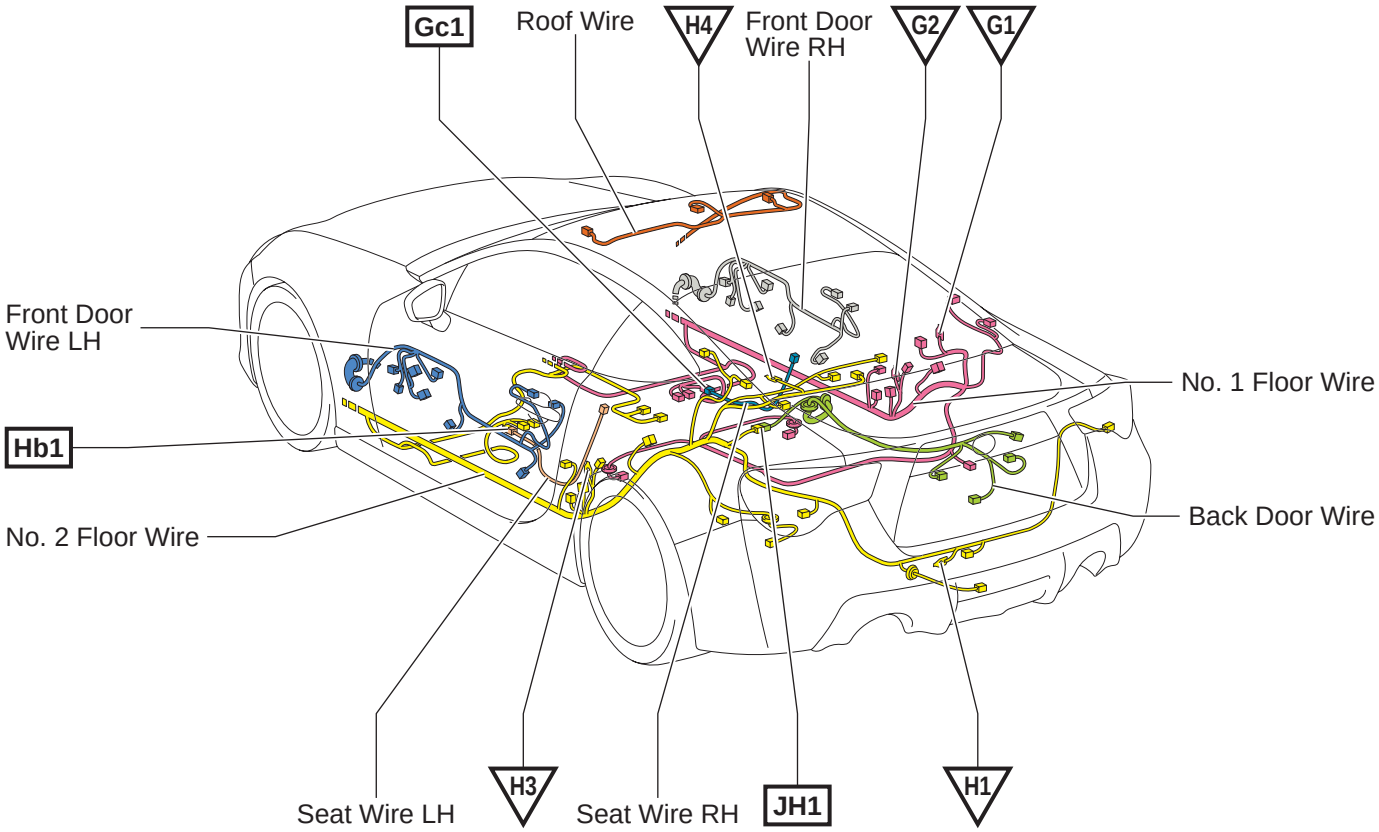

▭ : Location of Connector Joining Wire Harness and Wire Harness
▽ : Location of Ground Points

[RHD]

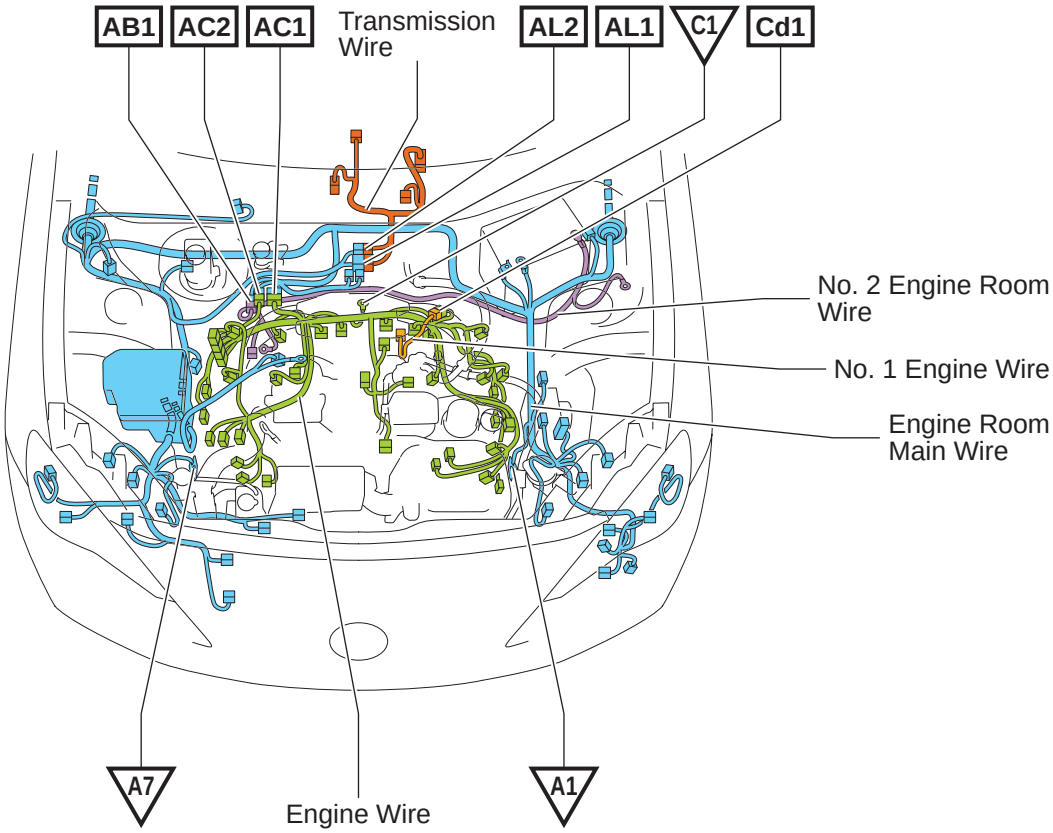

▭ : Location of Connector Joining Wire Harness and Wire Harness

[RHD]

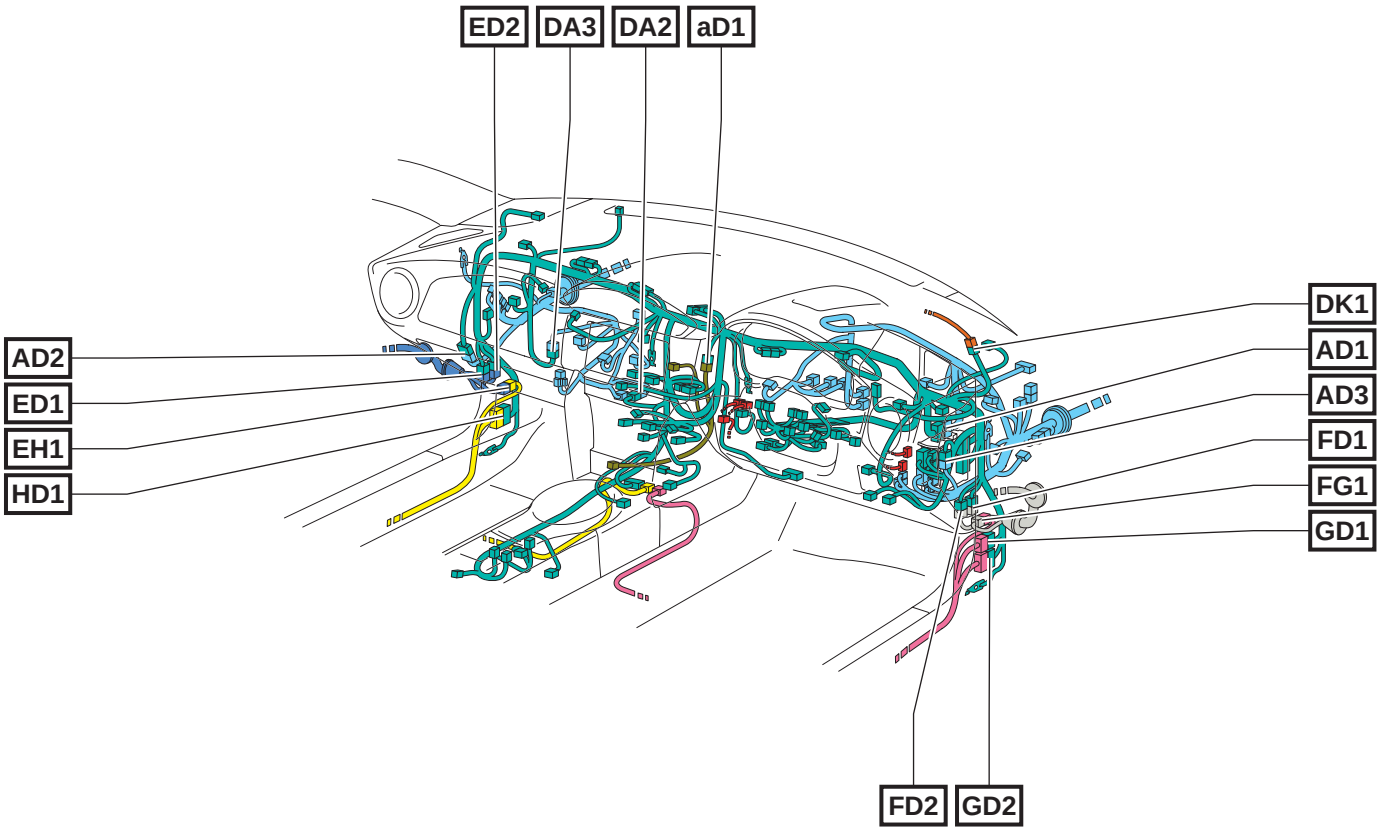

▽ : Location of Ground Points

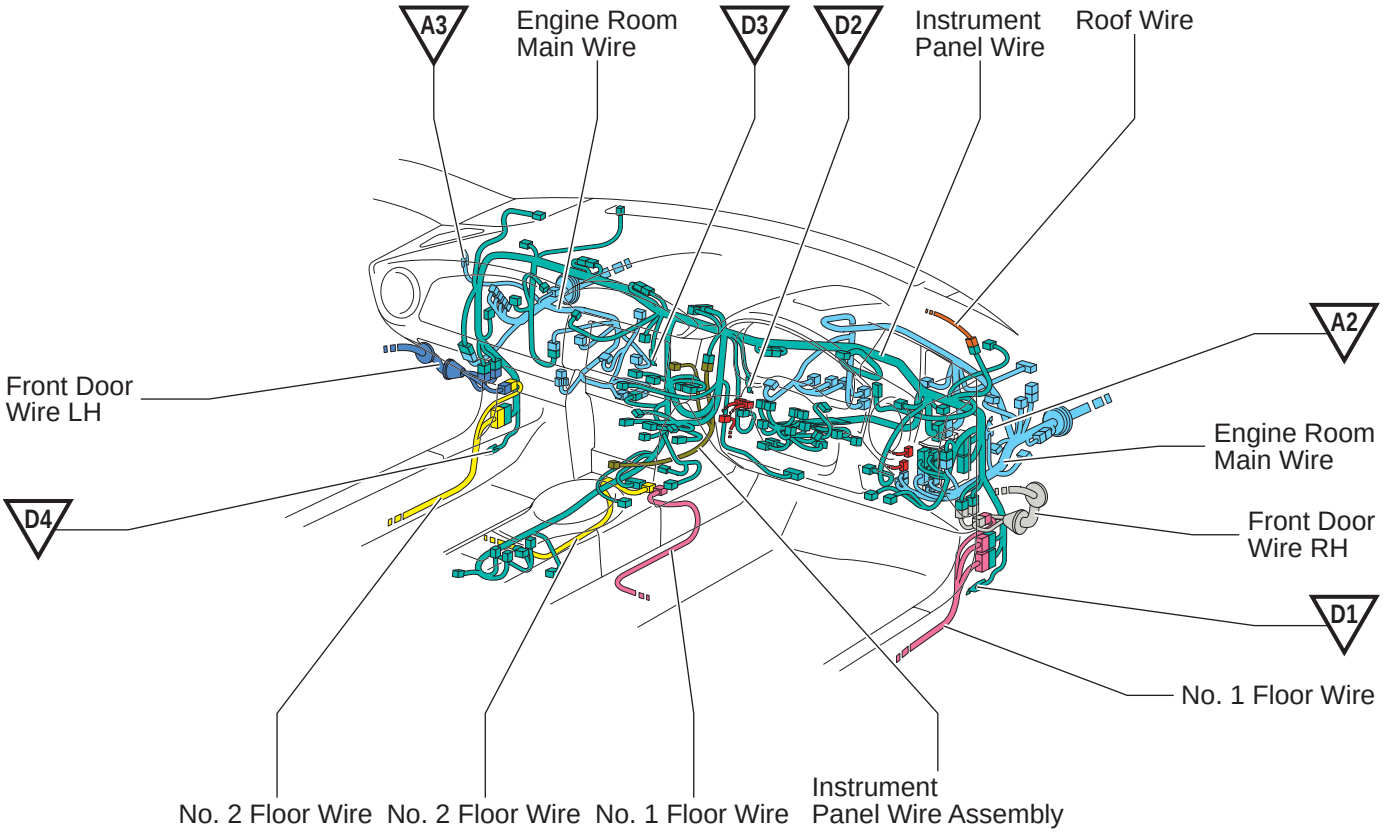

▭ : Location of Connector Joining Wire Harness and Wire Harness
▽ : Location of Ground Points

[RHD]

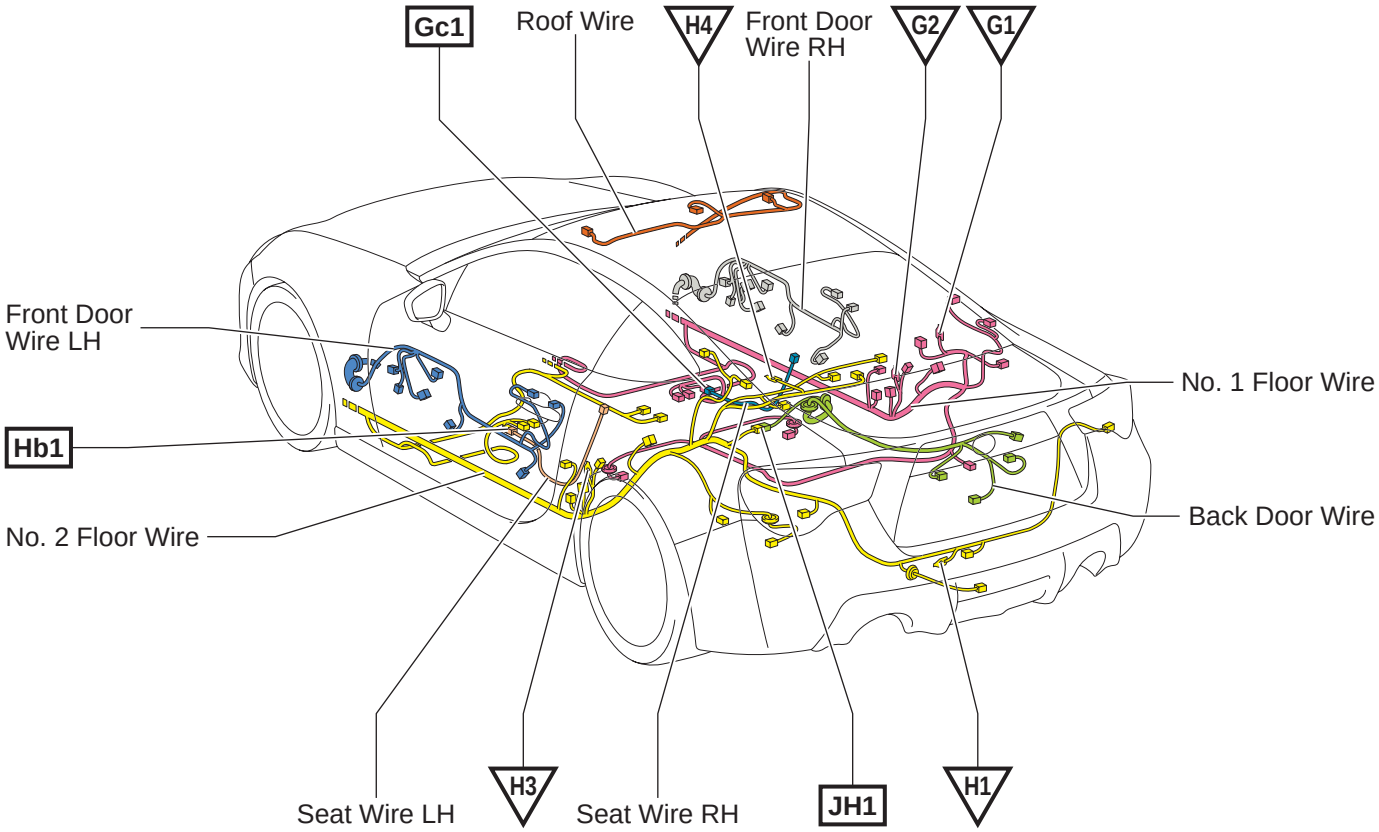

[Antenna]

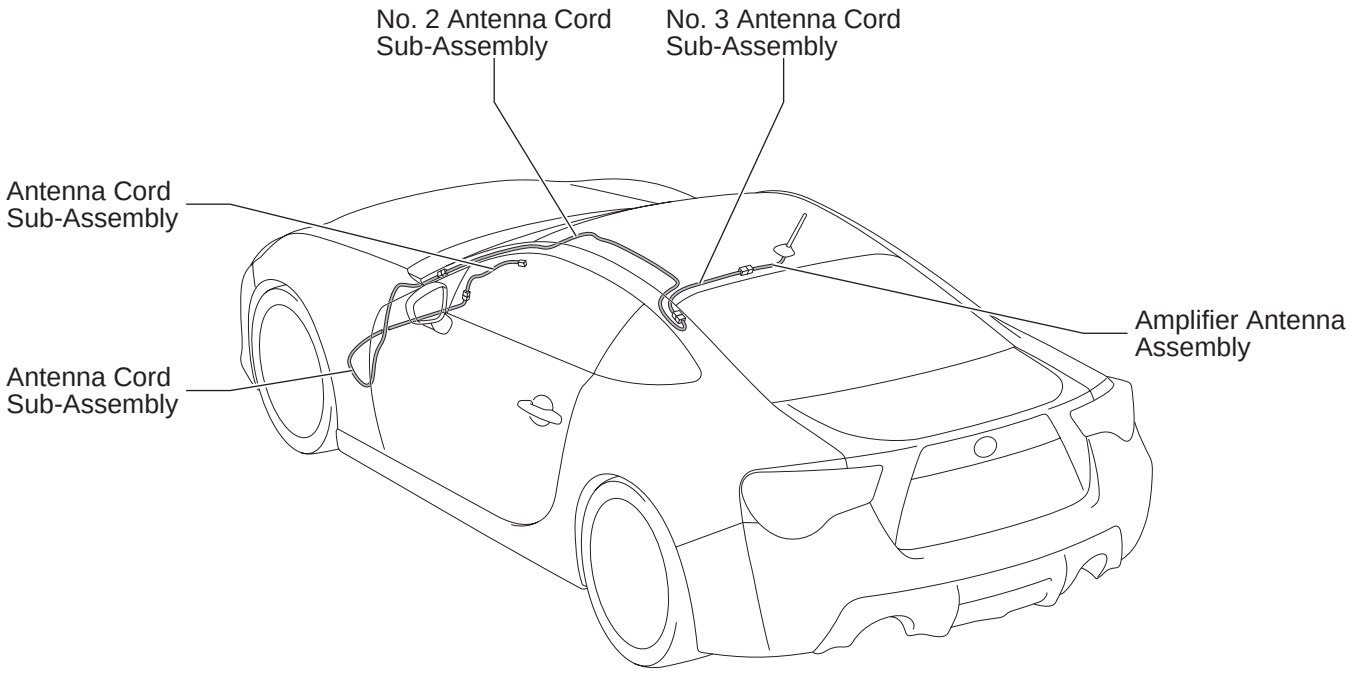
No. 2 Antenna Cord
Sub-Assembly
No. 3 Antenna Cord
Sub-Assembly
Antenna Cord
Sub-Assembly
Antenna Cord
Sub-Assembly
Amplifier Antenna
Assembly

BRZ
ELECTRICAL WIRING DIAGRAM
SYSTEM CIRCUITS

	Page
ABS	250
Air Conditioner (LHD Automatic A/C)	380
Air Conditioner (Manual A/C)	404
Air Conditioner (RHD Automatic A/C)	392
Alarm Control System	420
Audio System	356
Automatic Light Control	224
Back-Up Light	180
Charging	106
Clock	286
Combination Meter	362
Cooling Fan	376
Cruise Control	114
DLC3	158
Door Lock Control	300
Double Locking	324
ECT and A/T Indicator (A/T)	114
Engine Control	114
Engine Immobiliser System (w/ Entry & Start System)	72
Engine Immobiliser System (w/o Entry & Start System)	152
Entry & Start System	72
EPS	274
Front Fog Light	210
Front Wiper and Washer	332
Headlight	166
Headlight Beam Level Control	230
Headlight Cleaner	238
Horn	352
Ignition	110
Illumination	188
Interior Light	200
Key Reminder (w/o Entry & Start System)	244
Light Auto Turn Off System	224
Light Reminder	244
Luggage Compartment Door Opener	314
Mirror Heater	344
Multiplex Communication System (CAN)	162
Option Connector	416
Power Outlet	354
Power Source	64
Power Window (LHD)	288
Power Window (RHD)	294

	Page
Rear Fog Light	218
Rear Window Defogger	344
Remote Control Mirror (LHD)	336
Remote Control Mirror (RHD)	340
Seat Belt Warning	282
Seat Heater	350
Shift Indicator (M/T)	114
Shift Lock	114
SRS	265
Starting (w/ Entry & Start System)	72
Starting (w/o Entry & Start System)	102
Steering Lock (w/ Entry & Start System)	72
Stop Light	176
Taillight	188
TRC	250
Turn Signal and Hazard Warning Light	182
VSC	250
Wireless Door Lock Control (w/ Entry & Start System)	72
Wireless Door Lock Control (w/o Entry & Start System)	306

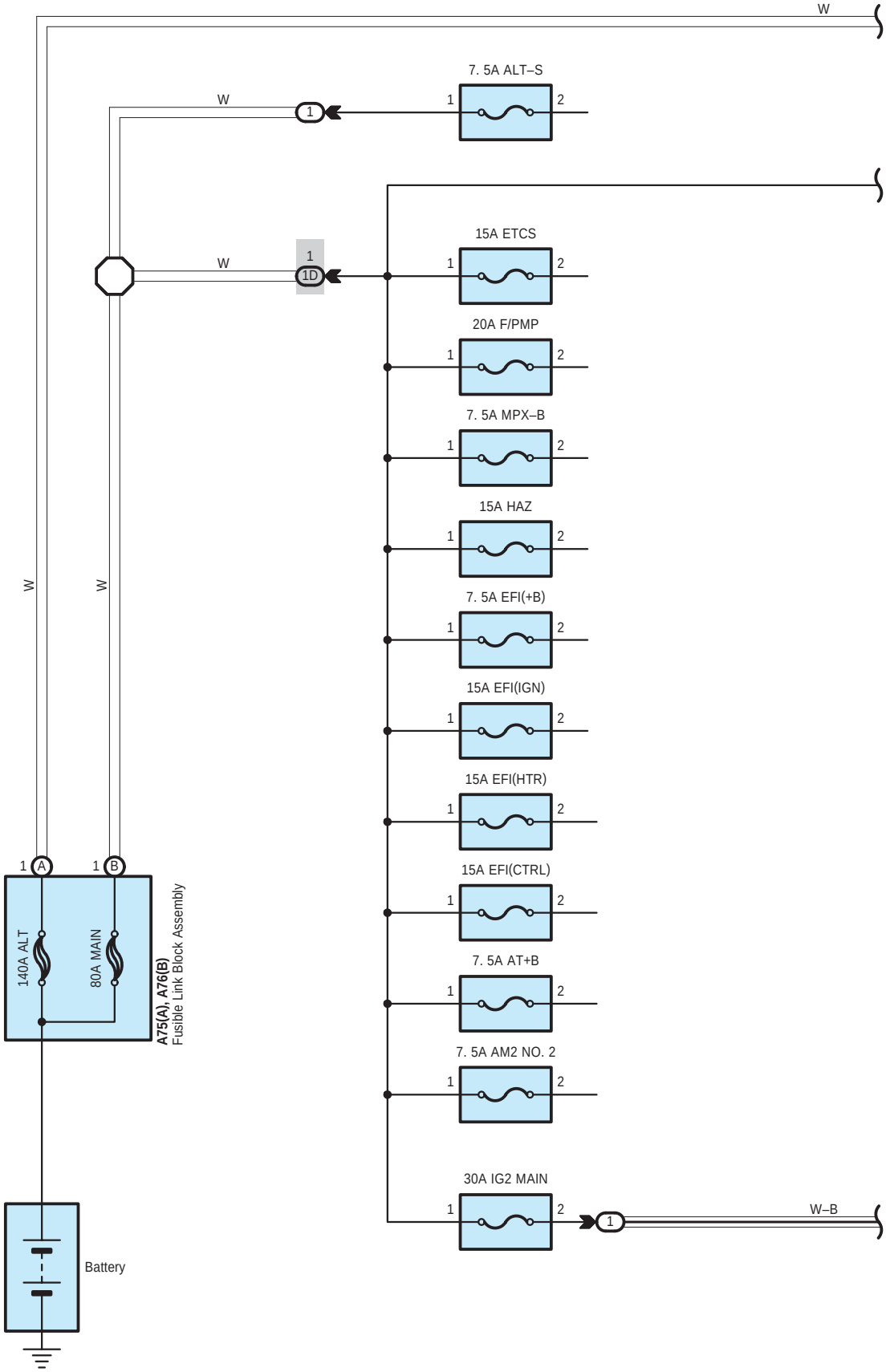
W
7. 5A ALT–S
W
1
1
2
15A ETCS
W
1
1D
1
2
20A F/PMP
1
2
7. 5A MPX–B
1
2
15A HAZ
1
2
W
W
7. 5A EFI(+B)
1
2
15A EFI(IGN)
1
2
15A EFI(HTR)
1
2
1 A
1 B
15A EFI(CTRL)
1
2
140A ALT
80A MAIN
A75(A), A76(B)
Fusible Link Block Assembly
7. 5A AT+B
1
2
7. 5A AM2 NO. 2
1
2
30A IG2 MAIN
1
2
1
W–B
Battery

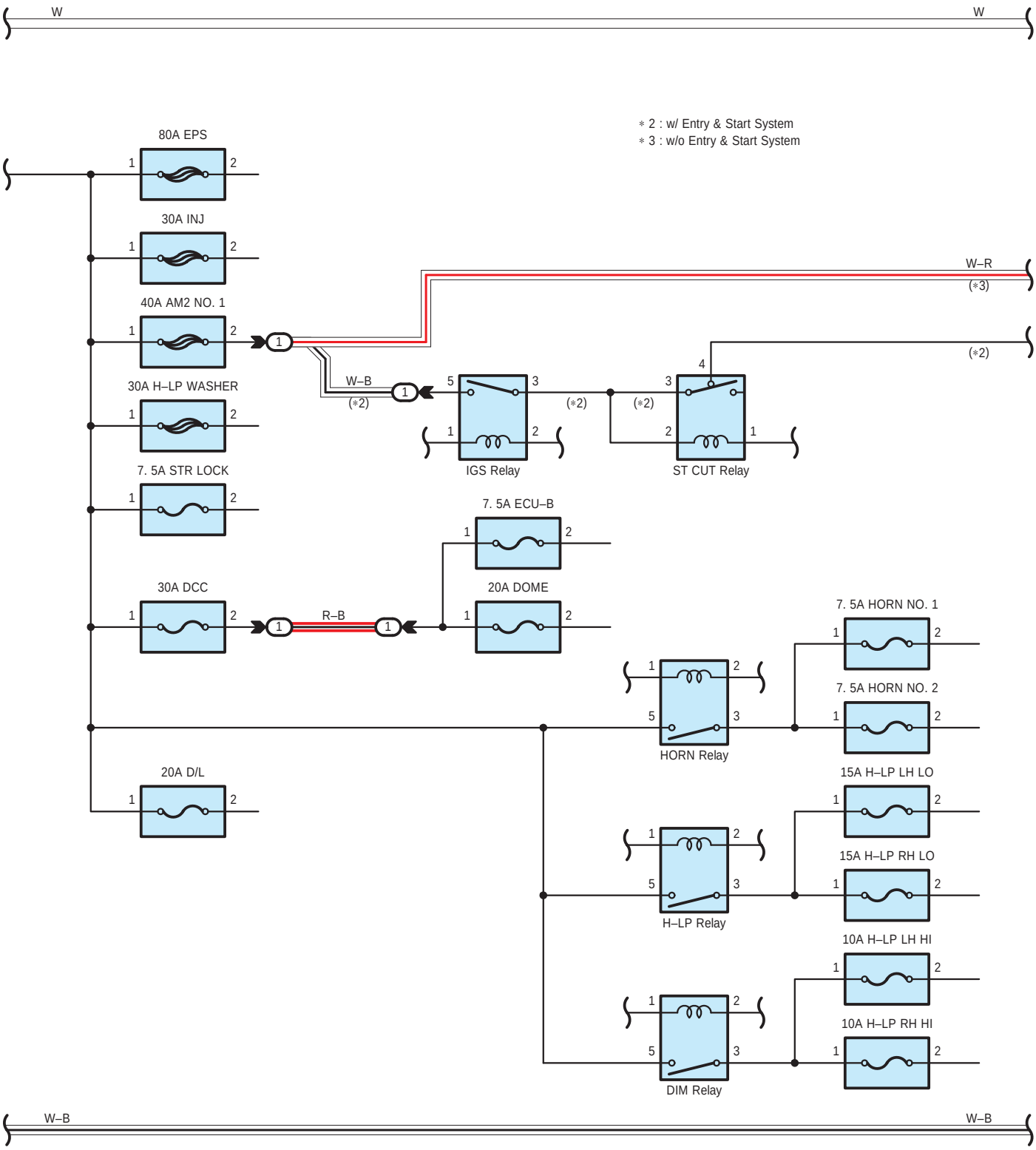
W
W
∗ 2 : w/ Entry & Start System
∗ 3 : w/o Entry & Start System
80A EPS
30A INJ
40A AM2 NO. 1
30A H–LP WASHER
7. 5A STR LOCK
30A DCC
20A D/L
W–R
(∗3)
(∗2)
W–B
(∗2)
IGS Relay
ST CUT Relay
7. 5A ECU–B
20A DOME
R–B
HORN Relay
7. 5A HORN NO. 1
7. 5A HORN NO. 2
H–LP Relay
15A H–LP LH LO
15A H–LP RH LO
DIM Relay
10A H–LP LH HI
10A H–LP RH HI
W–B
W–B

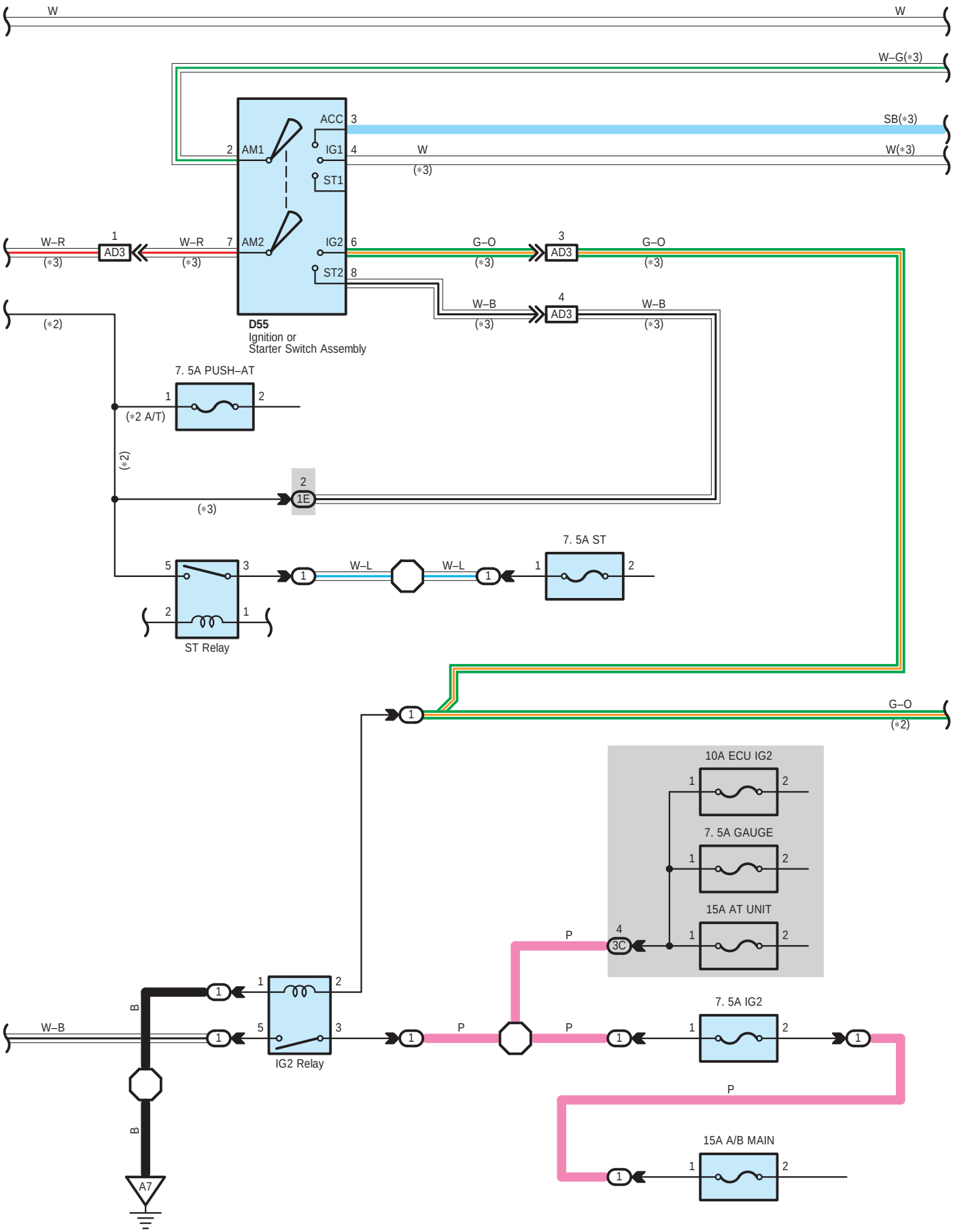
W
W
W–G(∗3)
ACC
3
SB(∗3)
2
AM1
IG1
4
W
W(∗3)
(∗3)
ST1
W–R
1
AD3
W–R
7
AM2
IG2
6
G–O
3
AD3
G–O
(∗3)
(∗3)
(∗3)
(∗3)
ST2
8
W–B
4
AD3
W–B
(∗3)
(∗3)
(∗2)
D55
Ignition or
Starter Switch Assembly
7. 5A PUSH–AT
1
2
(∗2 A/T)
(∗2)
2
1E
(∗3)
7. 5A ST
5
3
1
W–L
W–L
1
1
2
2
1
ST Relay
1
G–O
(∗2)
10A ECU IG2
1
2
7. 5A GAUGE
1
2
15A AT UNIT
1
2
P
4
3C
1
2
B
W–B
1
1
5
3
1
P
P
1
1
2
7. 5A IG2
IG2 Relay
P
B
15A A/B MAIN
1
2
1
A7

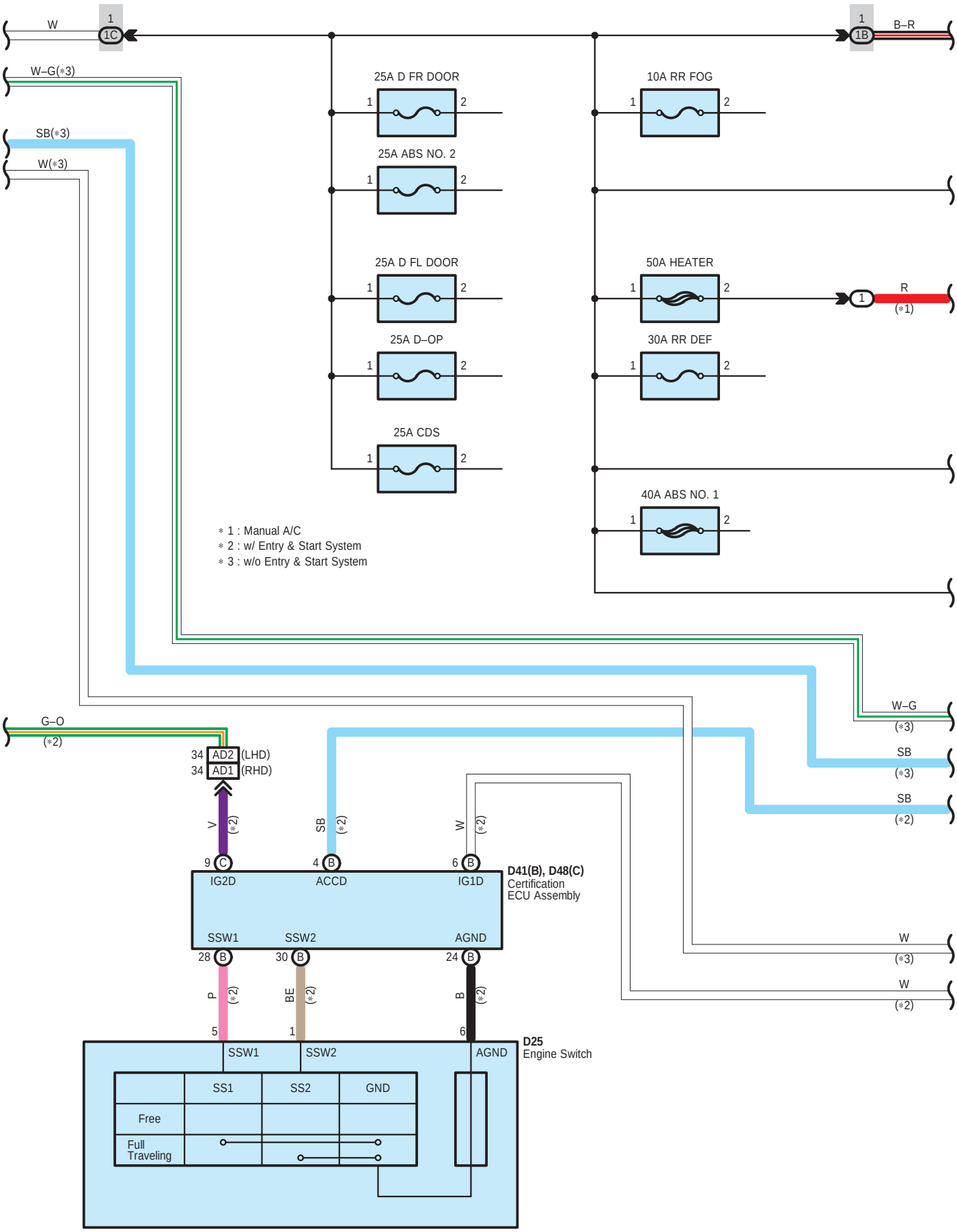
W
1
1C
1
1B
B–R
W–G(∗3)
SB(∗3)
W(∗3)
25A D FR DOOR
25A ABS NO. 2
25A D FL DOOR
25A D–OP
25A CDS
10A RR FOG
50A HEATER
30A RR DEF
40A ABS NO. 1
R
(∗1)
∗ 1 : Manual A/C
∗ 2 : w/ Entry & Start System
∗ 3 : w/o Entry & Start System
W–G
(∗3)
SB
(∗3)
SB
(∗2)
G–O
(∗2)
34 AD2 (LHD)
34 AD1 (RHD)
V
(∗2)
SB
(∗2)
W
(∗2)
9 C
4 B
6 B
IG2D
ACCD
IG1D
D41(B), D48(C)
Certification
ECU Assembly
SSW1
SSW2
AGND
28 B
30 B
24 B
P
(∗2)
BE
(∗2)
B
(∗2)
5
1
6
W
(∗3)
W
(∗2)
D25
Engine Switch
SSW1
SSW2
AGND
SS1
SS2
GND
Free
Full
Traveling

Power Source

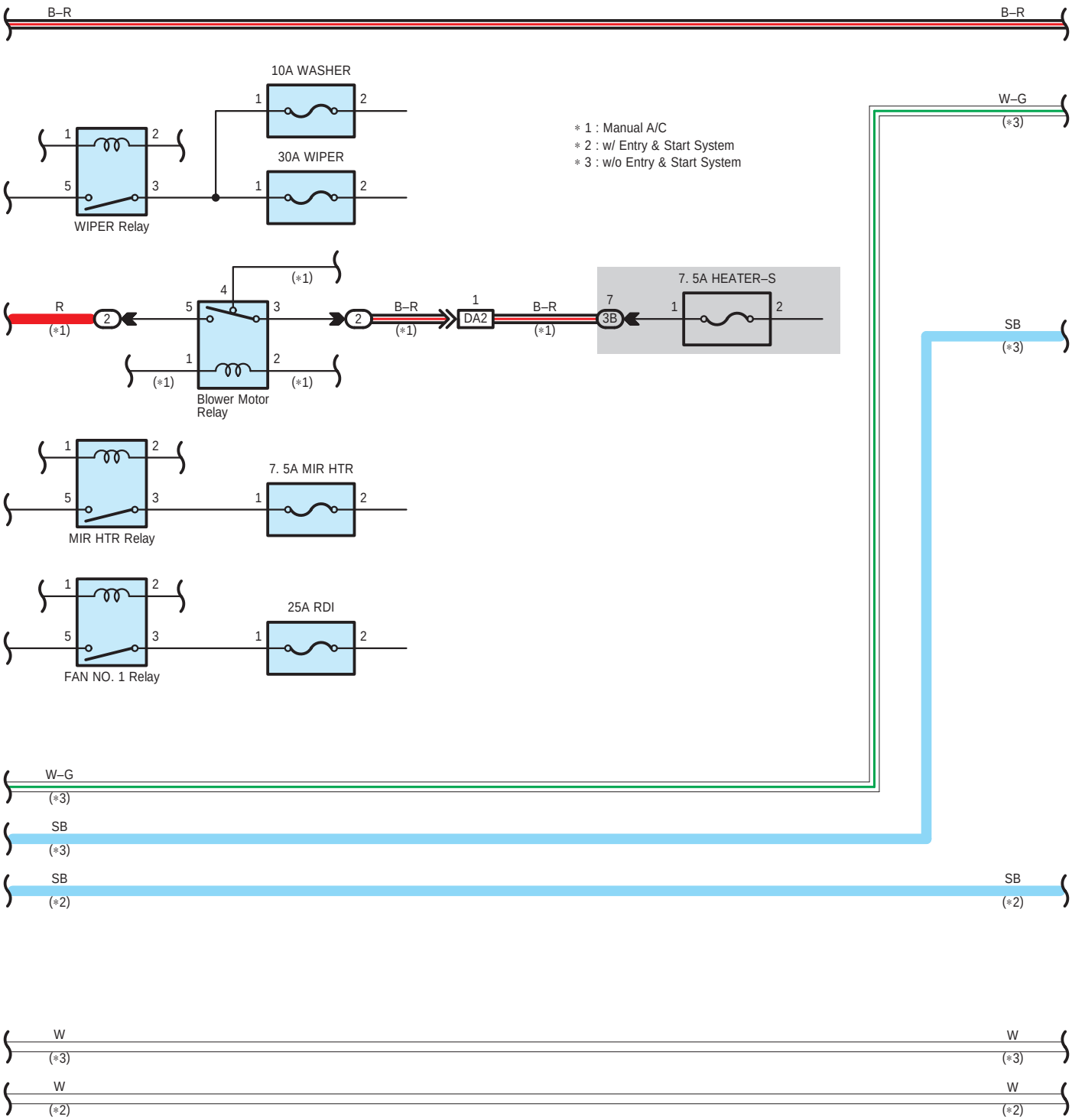

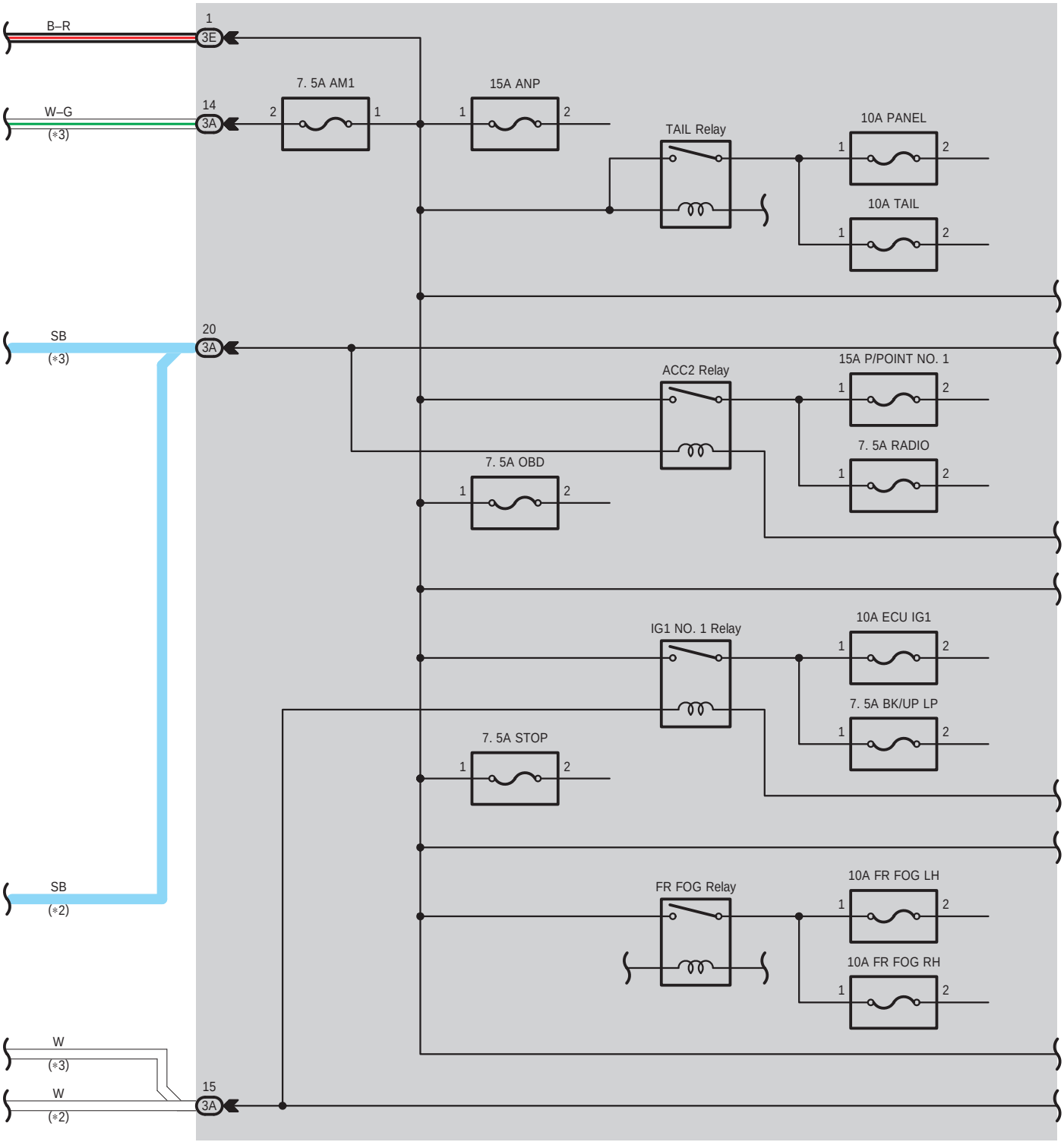
B–R
1
3E
W–G
(*3)
14
3A
7. 5A AM1
2
1
15A ANP
1
2
TAIL Relay
10A PANEL
1
2
10A TAIL
1
2
SB
(*3)
20
3A
ACC2 Relay
15A P/POINT NO. 1
1
2
7. 5A RADIO
1
2
7. 5A OBD
1
2
IG1 NO. 1 Relay
10A ECU IG1
1
2
7. 5A BK/UP LP
1
2
7. 5A STOP
1
2
SB
(*2)
FR FOG Relay
10A FR FOG LH
1
2
10A FR FOG RH
1
2
W
(*3)
W
(*2)
15
3A

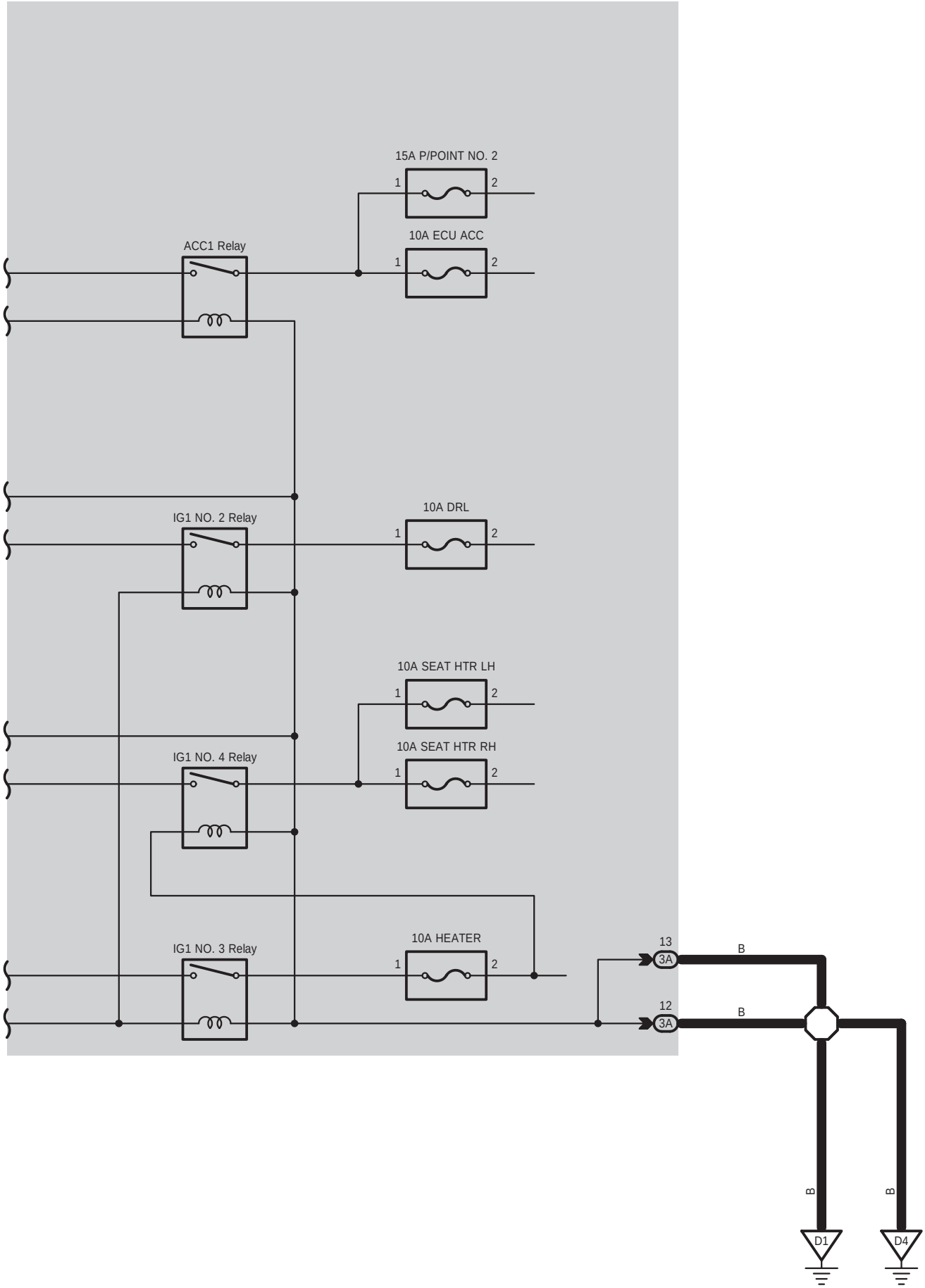
15A P/POINT NO. 2
1
2
10A ECU ACC
1
2
ACC1 Relay
IG1 NO. 2 Relay
10A DRL
1
2
10A SEAT HTR LH
1
2
10A SEAT HTR RH
1
2
IG1 NO. 4 Relay
10A HEATER
1
2
IG1 NO. 3 Relay
13
3A
B
12
3A
B
B
B
D1
D4

○ : Parts Location

Code		See Page	Code		See Page	Code		See Page
A75	A	39 (LHD)	D25		40 (LHD)	D48	C	41 (LHD)
		47 (RHD)			48 (RHD)			49 (RHD)
A76	B	39 (LHD)	D41	B	41 (LHD)	D55		41 (LHD)
		47 (RHD)			49 (RHD)			49 (RHD)

⬭ : Relay Blocks

Code	See Page	Relay Blocks (Relay Block Location)
1	24	Engine Room R/B (Engine Compartment Right)
2	25	R/B No. 2 (Behind Glove Box)

⬭ : Junction Block and Wire Harness Connector

Code	See Page	Junction Block and Wire Harness (Connector Location)
1B	24	Engine Room Main Wire and Engine Room J/B (Engine Compartment Right)
1C		
1D		
1E		
3A	26	Instrument Panel Wire and Instrument Panel J/B Assembly (Instrument Panel Reinforcement)
3B		
3C	26	Engine Room Main Wire and Instrument Panel J/B Assembly (Instrument Panel Reinforcement)
3E		

▭ : Connector Joining Wire Harness and Wire Harness

Code	See Page	Joining Wire Harness and Wire Harness (Connector Location)
AD1	59 (RHD)	Engine Room Main Wire and Instrument Panel Wire (Cowl Side Panel RH)
AD2	55 (LHD)	Engine Room Main Wire and Instrument Panel Wire (Instrument Panel Reinforcement)
AD3	55 (LHD)	Engine Room Main Wire and Instrument Panel Wire (Cowl Side Panel LH)
	59 (RHD)	Engine Room Main Wire and Instrument Panel Wire (Cowl Side Panel RH)
DA2	55 (LHD)	Instrument Panel Wire and Engine Room Main Wire (Around A/C Unit)
	59 (RHD)	

▽ : Ground Points

Code	See Page	Ground Points Location
A7	54 (LHD)	Front Fender Apron RH
	58 (RHD)	
D1	55 (LHD)	Cowl Side Panel LH
	59 (RHD)	Cowl Side Panel RH
D4	55 (LHD)	
	59 (RHD)	Cowl Side Panel LH

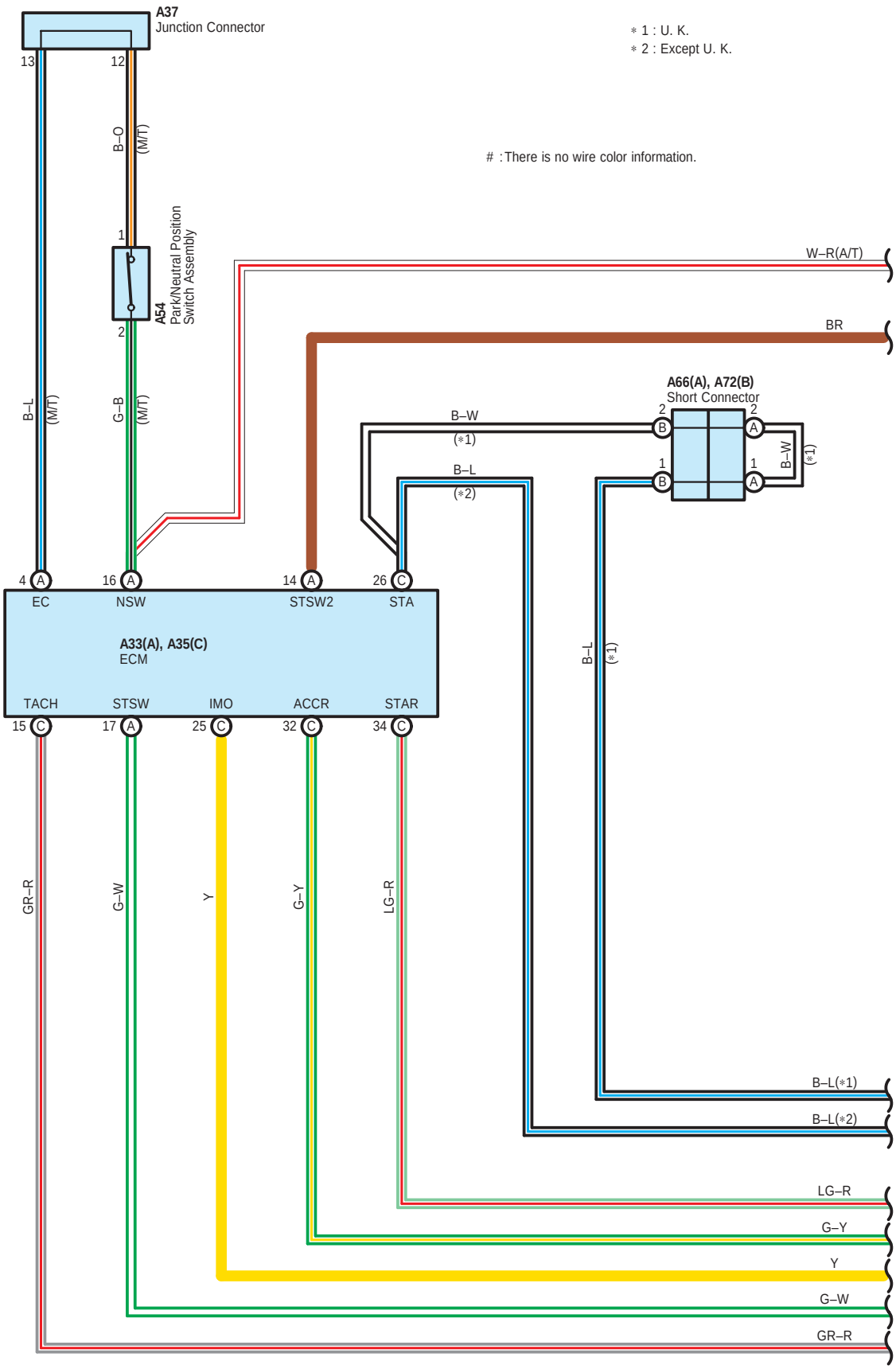
A37
Junction Connector
∗1 : U. K.
∗2 : Except U. K.
: There is no wire color information.
13
12
B–O
(M/T)
1
2
A54
Park/Neutral Position
Switch Assembly
W–R(A/T)
BR
B–L
(M/T)
G–B
(M/T)
A66(A), A72(B)
Short Connector
B–W
(∗1)
B–L
(∗2)
B–W
(∗1)
B–L
(∗1)
4 A
EC
16 A
NSW
14 A
STSW2
26 C
STA
A33(A), A35(C)
ECM
TACH
STSW
IMO
ACCR
STAR
15 C
17 A
25 C
32 C
34 C
GR–R
G–W
Y
G–Y
LG–R
B–L(∗1)
B–L(∗2)
LG–R
G–Y
Y
G–W
GR–R

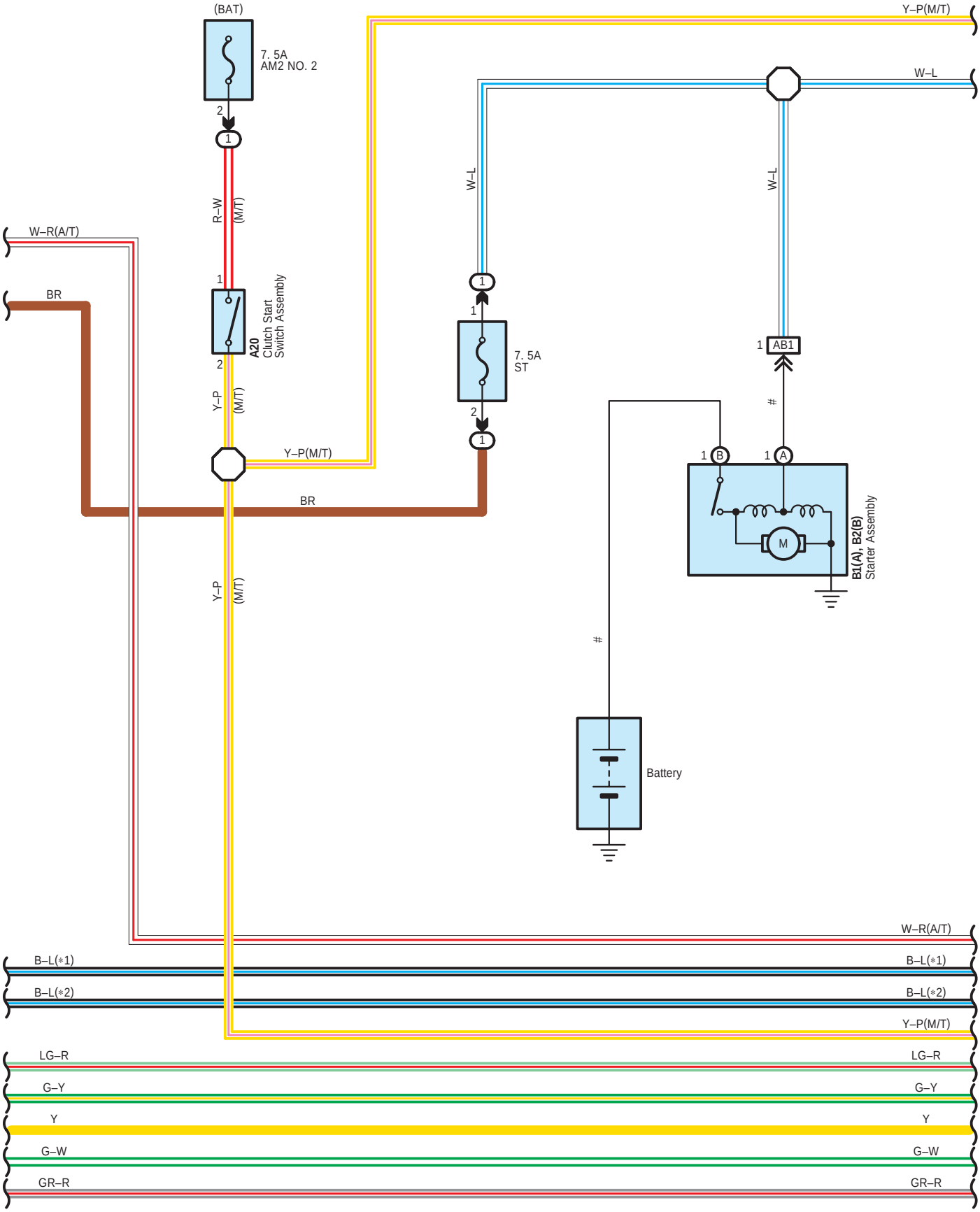
(BAT)
7. 5A
AM2 NO. 2
2
1
R–W
(M/T)
W–R(A/T)
BR
1
A20
Clutch Start
Switch Assembly
2
Y–P
(M/T)
Y–P(M/T)
BR
Y–P
(M/T)
Y–P(M/T)
W–L
W–L
W–L
1
1
7. 5A
ST
2
1
1
AB1
#
1 B
1 A
M
B1(A), B2(B)
Starter Assembly
#
Battery
W–R(A/T)
B–L(*1)
B–L(*1)
B–L(*2)
B–L(*2)
Y–P(M/T)
LG–R
LG–R
G–Y
G–Y
Y
Y
G–W
G–W
GR–R
GR–R

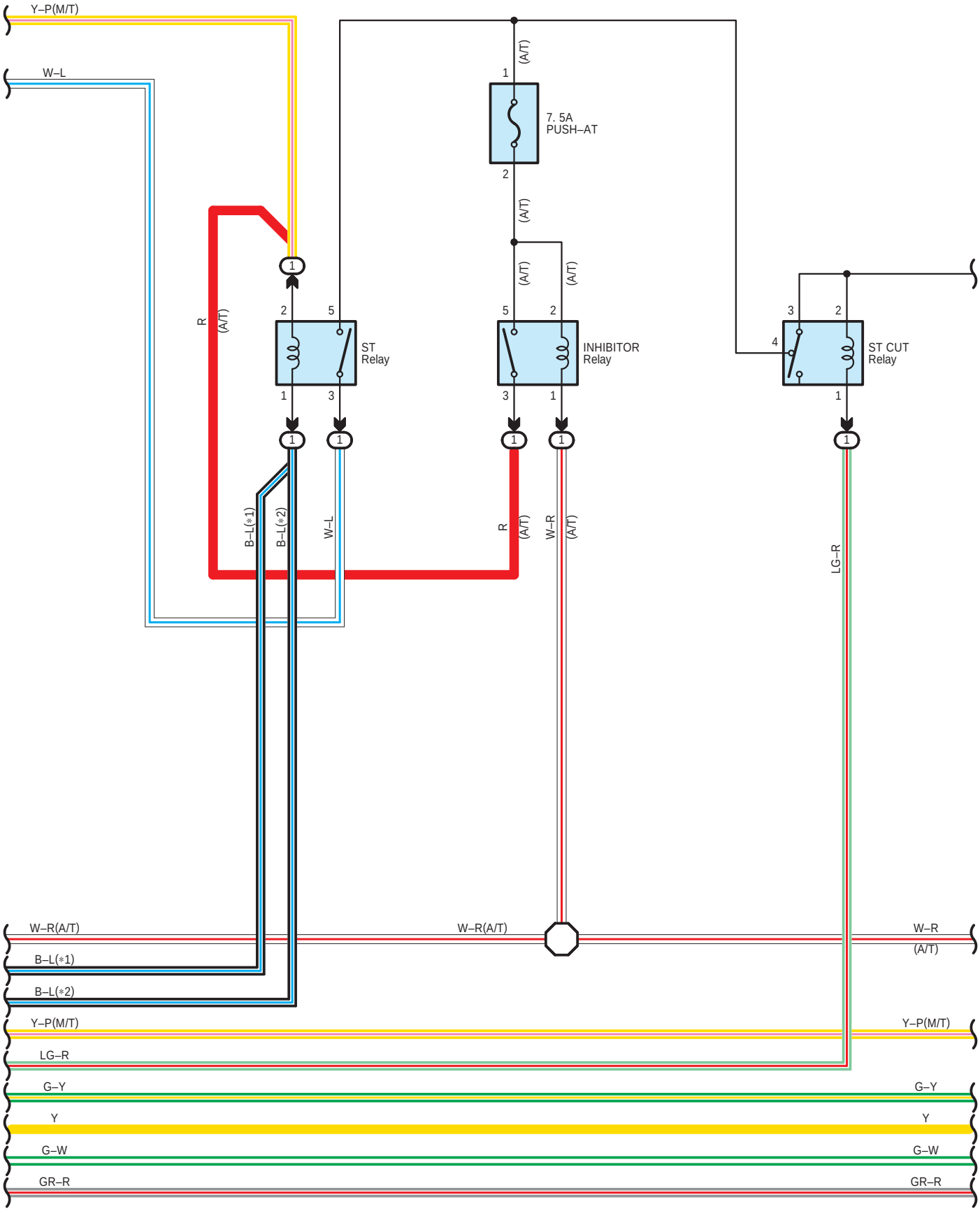
Y–P(M/T)
W–L
7. 5A
PUSH–AT
(A/T)
ST
Relay
INHIBITOR
Relay
ST CUT
Relay
R
B–L(*1)
B–L(*2)
W–L
W–R
LG–R
W–R(A/T)
W–R
B–L(*1)
B–L(*2)
Y–P(M/T)
LG–R
G–Y
Y
G–W
GR–R

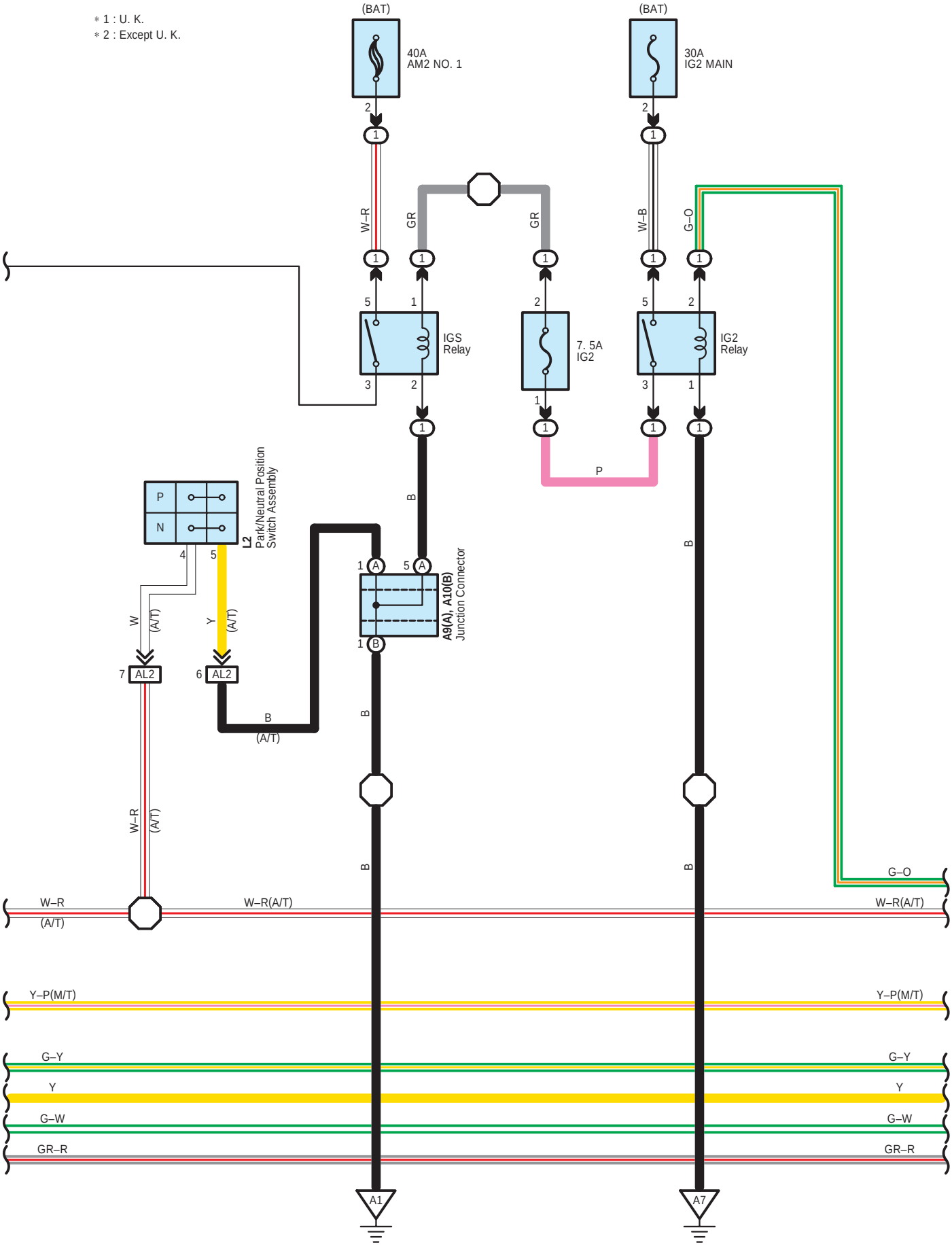
* 1 : U. K.
* 2 : Except U. K.
(BAT)
40A
AM2 NO. 1
(BAT)
30A
IG2 MAIN
W–R
GR
GR
W–B
G–O
IGS
Relay
7. 5A
IG2
IG2
Relay
P
B
L2
Park/Neutral Position
Switch Assembly
P
N
W
(A/T)
Y
(A/T)
AL2
AL2
B
(A/T)
A9(A), A10(B)
Junction Connector
W–R
(A/T)
W–R(A/T)
G–O
W–R
(A/T)
W–R(A/T)
Y–P(M/T)
Y–P(M/T)
G–Y
G–Y
Y
Y
G–W
G–W
GR–R
GR–R
A1
A7

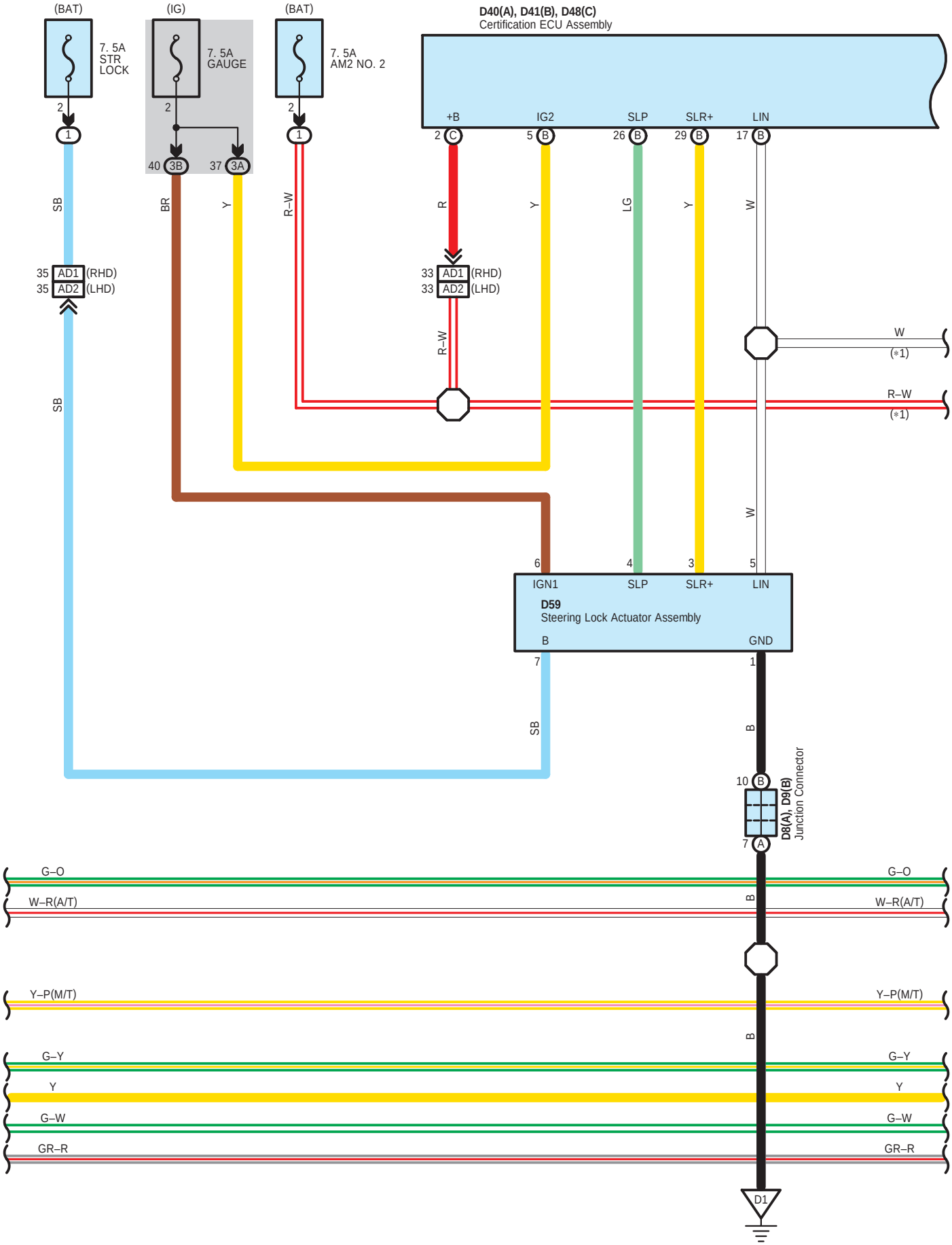
(BAT)
7. 5A
STR
LOCK
(IG)
7. 5A
GAUGE
(BAT)
7. 5A
AM2 NO. 2
D40(A), D41(B), D48(C)
Certification ECU Assembly
+B
IG2
SLP
SLR+
LIN
35 AD1 (RHD)
35 AD2 (LHD)
33 AD1 (RHD)
33 AD2 (LHD)
W
(*1)
R–W
(*1)
IGN1
SLP
SLR+
LIN
D59
Steering Lock Actuator Assembly
B
GND
D8(A), D9(B)
Junction Connector
G–O
W–R(A/T)
Y–P(M/T)
G–Y
Y
G–W
GR–R
D1

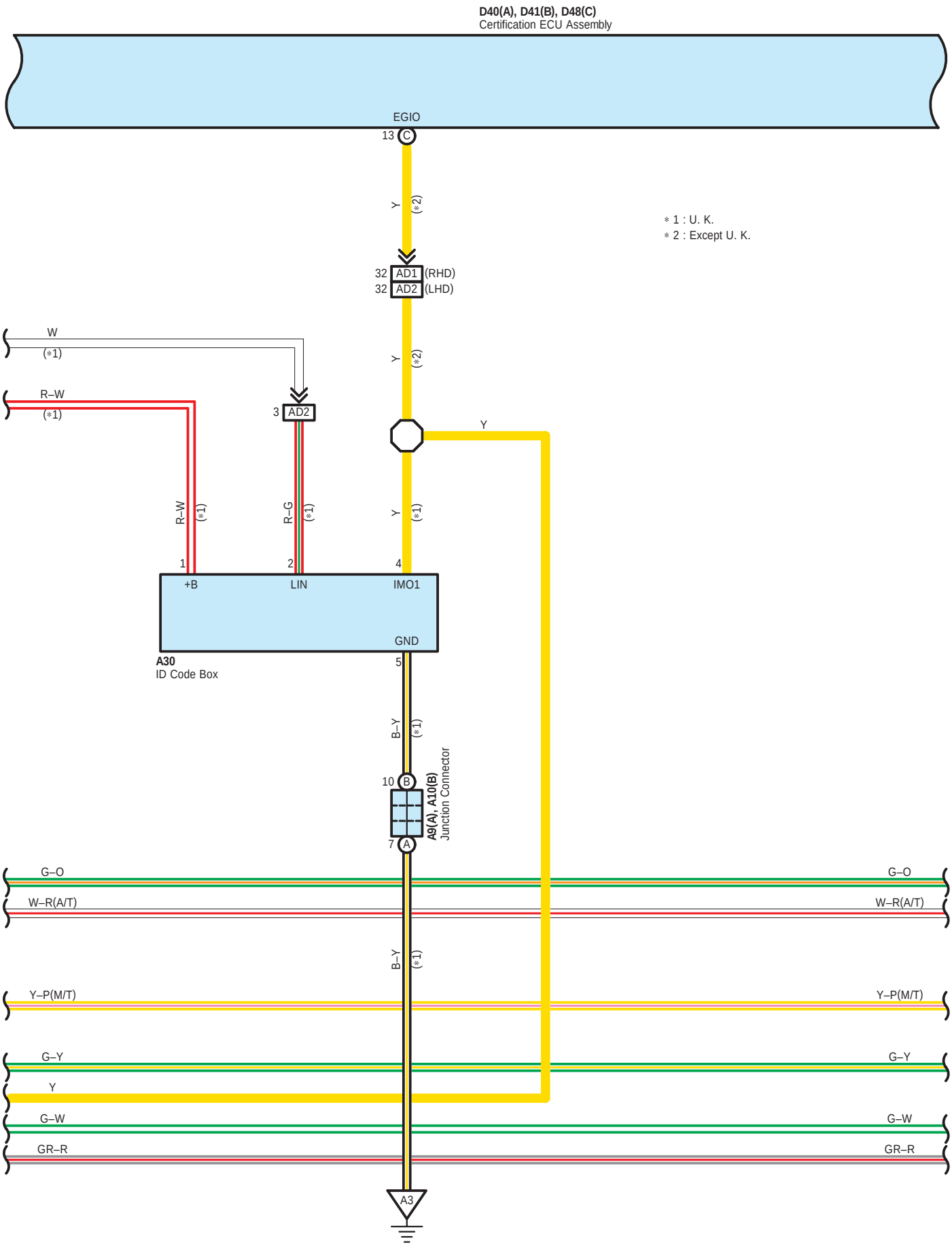
D40(A), D41(B), D48(C)
Certification ECU Assembly
EGIO
13 C
Y
(*2)
* 1 : U. K.
* 2 : Except U. K.
32 AD1 (RHD)
32 AD2 (LHD)
W
(*1)
R–W
(*1)
3 AD2
Y
R–W
(*1)
R–G
(*1)
Y
(*1)
1
2
4
+B
LIN
IMO1
GND
A30
ID Code Box
5
B–Y
(*1)
10 B
A9(A), A10(B)
Junction Connector
7 A
G–O
W–R(A/T)
B–Y
(*1)
Y–P(M/T)
G–Y
Y
G–W
GR–R
A3

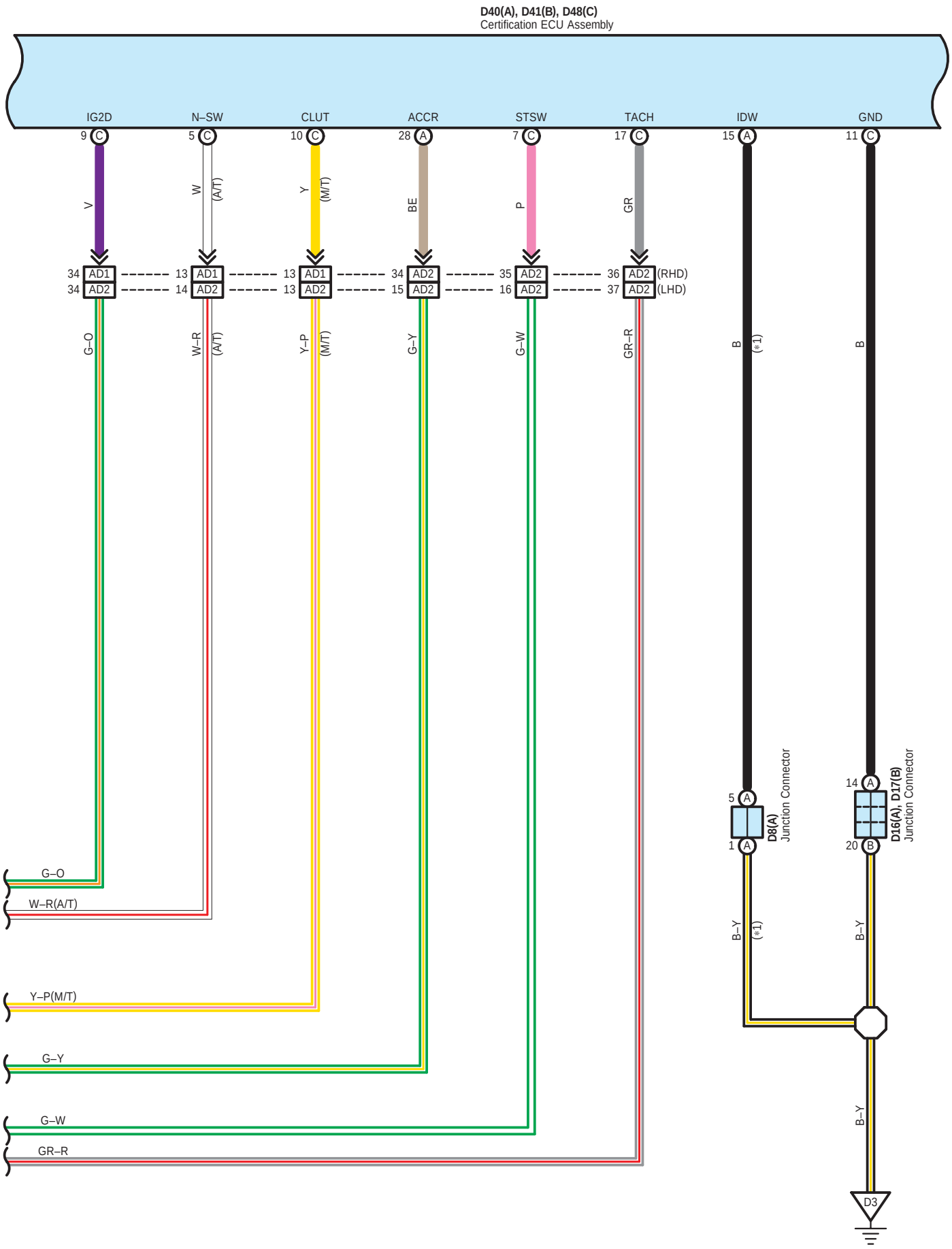
D40(A), D41(B), D48(C)
Certification ECU Assembly
IG2D
N–SW
CLUT
ACCR
STSW
TACH
IDW
GND
9 C
5 C
10 C
28 A
7 C
17 C
15 A
11 C
V
W
(A/T)
Y
(M/T)
BE
P
GR
34 AD1
34 AD2
13 AD1
14 AD2
13 AD1
13 AD2
34 AD2
15 AD2
35 AD2
16 AD2
36 AD2 (RHD)
37 AD2 (LHD)
G–O
W–R
(A/T)
Y–P
(M/T)
G–Y
G–W
GR–R
B
(*1)
B
5 A
1 A
D8(A)
Junction Connector
14 A
20 B
D16(A), D17(B)
Junction Connector
B–Y
(*1)
B–Y
B–Y
G–O
W–R(A/T)
Y–P(M/T)
G–Y
G–W
GR–R
D3

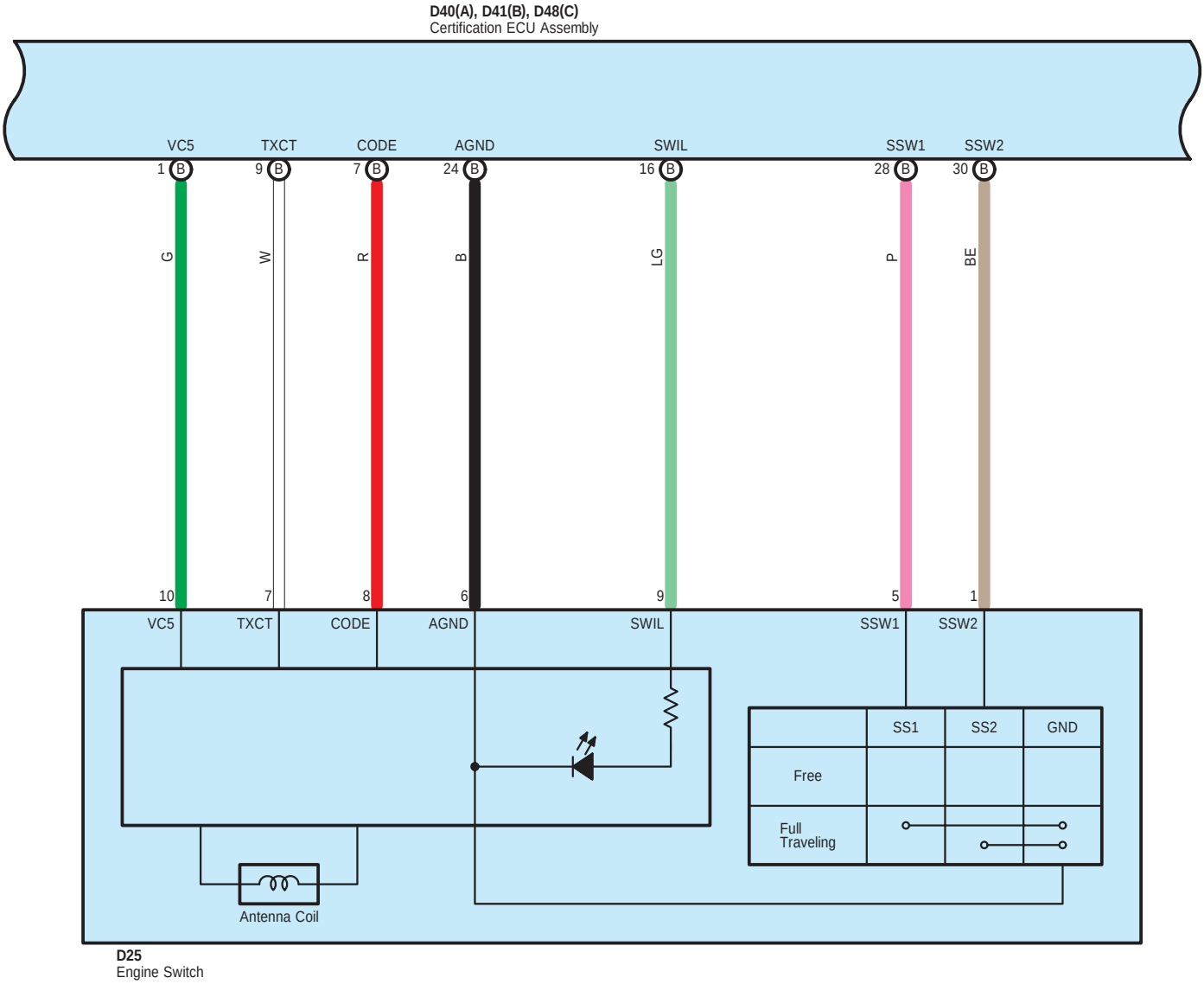
D40(A), D41(B), D48(C)
Certification ECU Assembly
VC5
TXCT
CODE
AGND
SWIL
SSW1
SSW2
1 B
9 B
7 B
24 B
16 B
28 B
30 B
G
W
R
B
LG
P
BE
10
7
8
6
9
5
1
VC5
TXCT
CODE
AGND
SWIL
SSW1
SSW2
SS1
SS2
GND
Free
Full Traveling
Antenna Coil
D25
Engine Switch

＊1 : U. K.

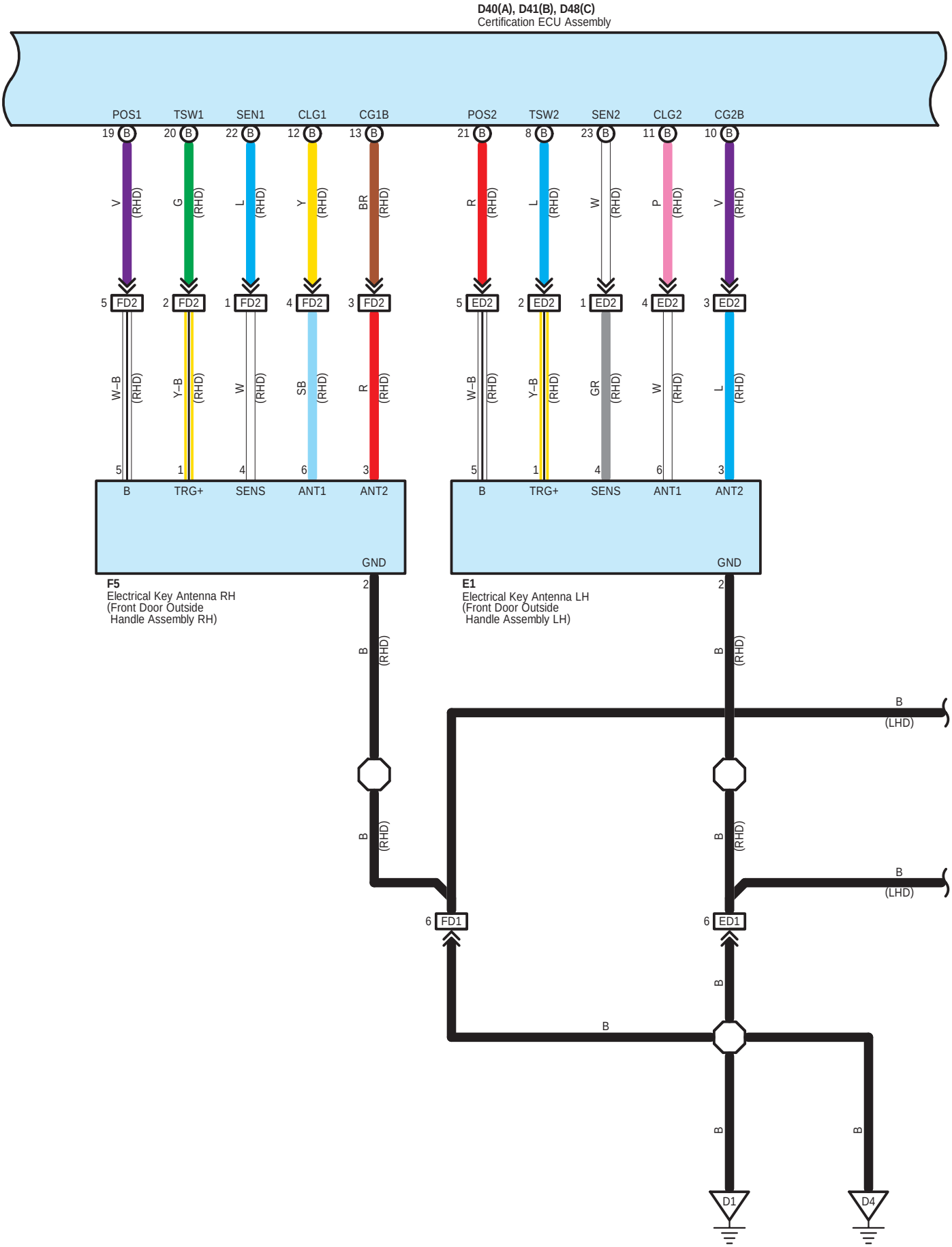
D40(A), D41(B), D48(C)
Certification ECU Assembly
POS1
TSW1
SEN1
CLG1
CG1B
POS2
TSW2
SEN2
CLG2
CG2B
19 B
20 B
22 B
12 B
13 B
21 B
8 B
23 B
11 B
10 B
V (RHD)
G (RHD)
L (RHD)
Y (RHD)
BR (RHD)
R (RHD)
L (RHD)
W (RHD)
P (RHD)
V (RHD)
5 FD2
2 FD2
1 FD2
4 FD2
3 FD2
5 ED2
2 ED2
1 ED2
4 ED2
3 ED2
W–B (RHD)
Y–B (RHD)
W (RHD)
SB (RHD)
R (RHD)
W–B (RHD)
Y–B (RHD)
GR (RHD)
W (RHD)
L (RHD)
5
1
4
6
3
5
1
4
6
3
B
TRG+
SENS
ANT1
ANT2
GND
F5
Electrical Key Antenna RH
(Front Door Outside
Handle Assembly RH)
E1
Electrical Key Antenna LH
(Front Door Outside
Handle Assembly LH)
2
B (RHD)
B (LHD)
6 FD1
6 ED1
D1
D4

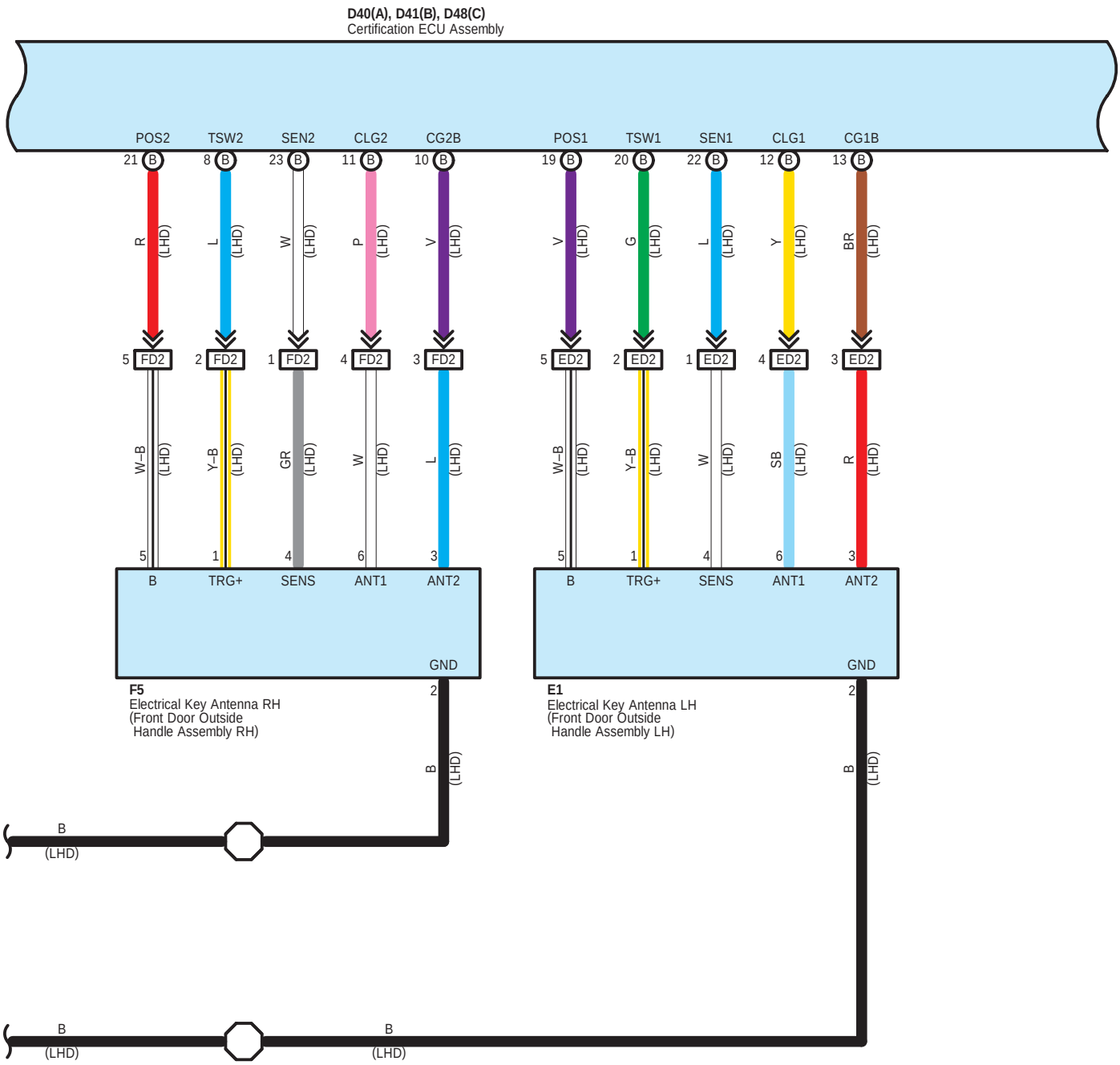
D40(A), D41(B), D48(C)
Certification ECU Assembly
POS2
TSW2
SEN2
CLG2
CG2B
POS1
TSW1
SEN1
CLG1
CG1B
21 B
8 B
23 B
11 B
10 B
19 B
20 B
22 B
12 B
13 B
R (LHD)
L (LHD)
W (LHD)
P (LHD)
V (LHD)
V (LHD)
G (LHD)
L (LHD)
Y (LHD)
BR (LHD)
5 FD2
2 FD2
1 FD2
4 FD2
3 FD2
5 ED2
2 ED2
1 ED2
4 ED2
3 ED2
W–B (LHD)
Y–B (LHD)
GR (LHD)
W (LHD)
L (LHD)
W–B (LHD)
Y–B (LHD)
W (LHD)
SB (LHD)
R (LHD)
5
1
4
6
3
5
1
4
6
3
B
TRG+
SENS
ANT1
ANT2
GND
2
F5
Electrical Key Antenna RH
(Front Door Outside
Handle Assembly RH)
B (LHD)
B
(LHD)
B
TRG+
SENS
ANT1
ANT2
GND
2
E1
Electrical Key Antenna LH
(Front Door Outside
Handle Assembly LH)
B (LHD)
B
(LHD)
B
(LHD)

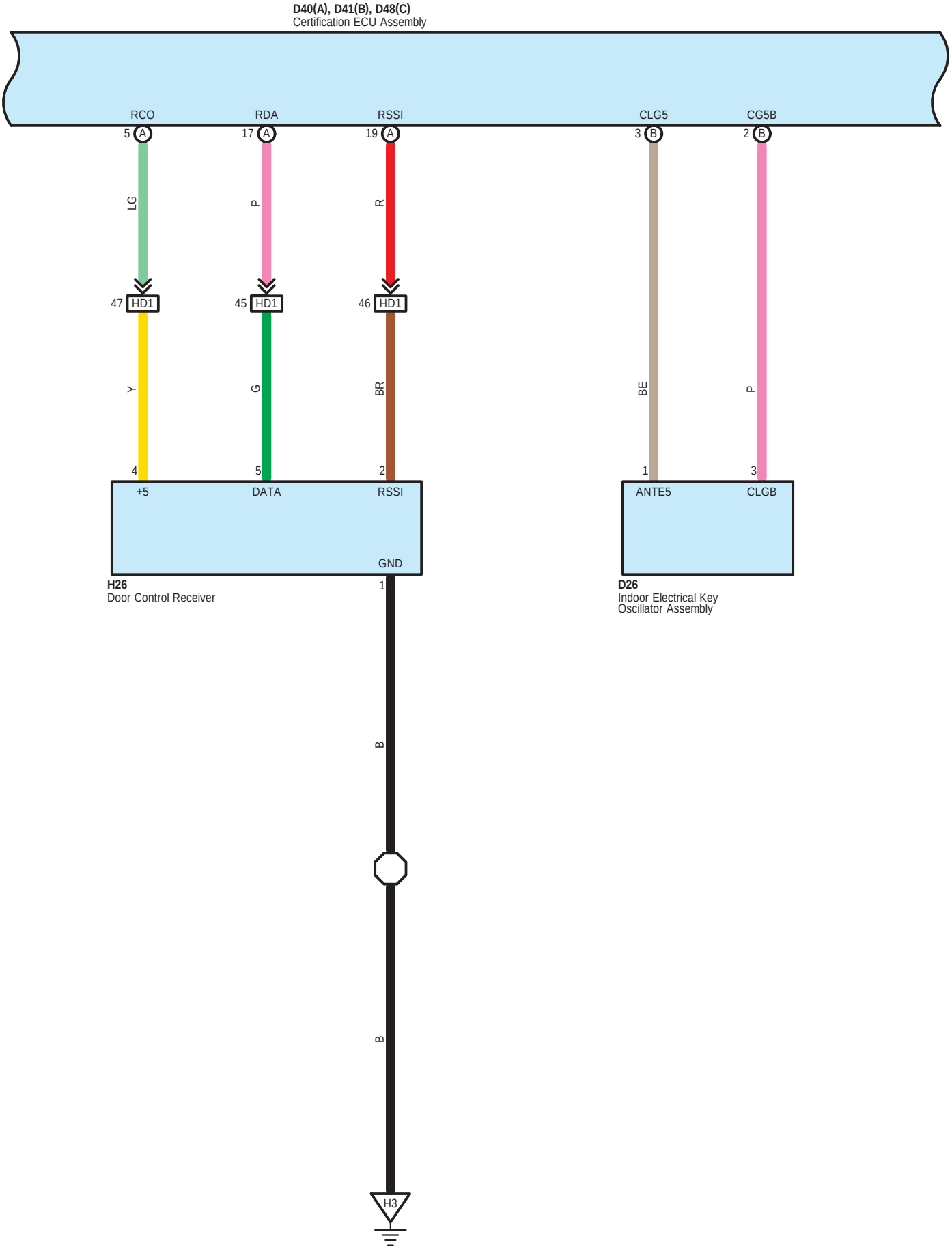
D40(A), D41(B), D48(C)
Certification ECU Assembly
RCO
RDA
RSSI
CLG5
CG5B
5 A
17 A
19 A
3 B
2 B
LG
P
R
47 HD1
45 HD1
46 HD1
Y
G
BR
BE
P
4
5
2
1
3
+5
DATA
RSSI
GND
ANTE5
CLGB
H26
Door Control Receiver
1
D26
Indoor Electrical Key
Oscillator Assembly
B
B
H3

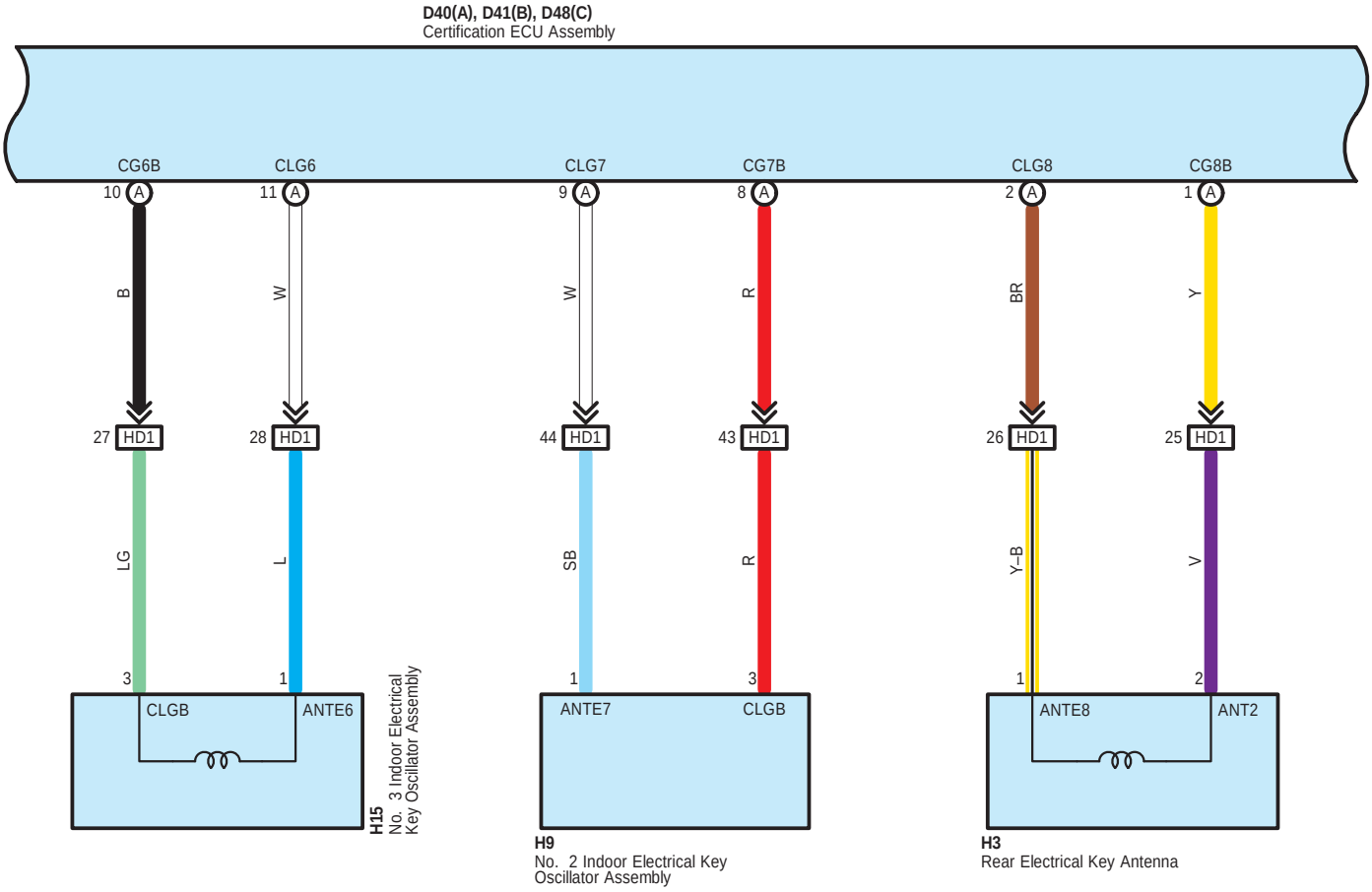
D40(A), D41(B), D48(C)
Certification ECU Assembly
CG6B
CLG6
CLG7
CG7B
CLG8
CG8B
10 A
11 A
9 A
8 A
2 A
1 A
B
W
W
R
BR
Y
27 HD1
28 HD1
44 HD1
43 HD1
26 HD1
25 HD1
LG
L
SB
R
Y–B
V
3
1
1
3
1
2
CLGB
ANTE6
ANTE7
CLGB
ANTE8
ANT2
H15
No. 3 Indoor Electrical
Key Oscillator Assembly
H9
No. 2 Indoor Electrical Key
Oscillator Assembly
H3
Rear Electrical Key Antenna

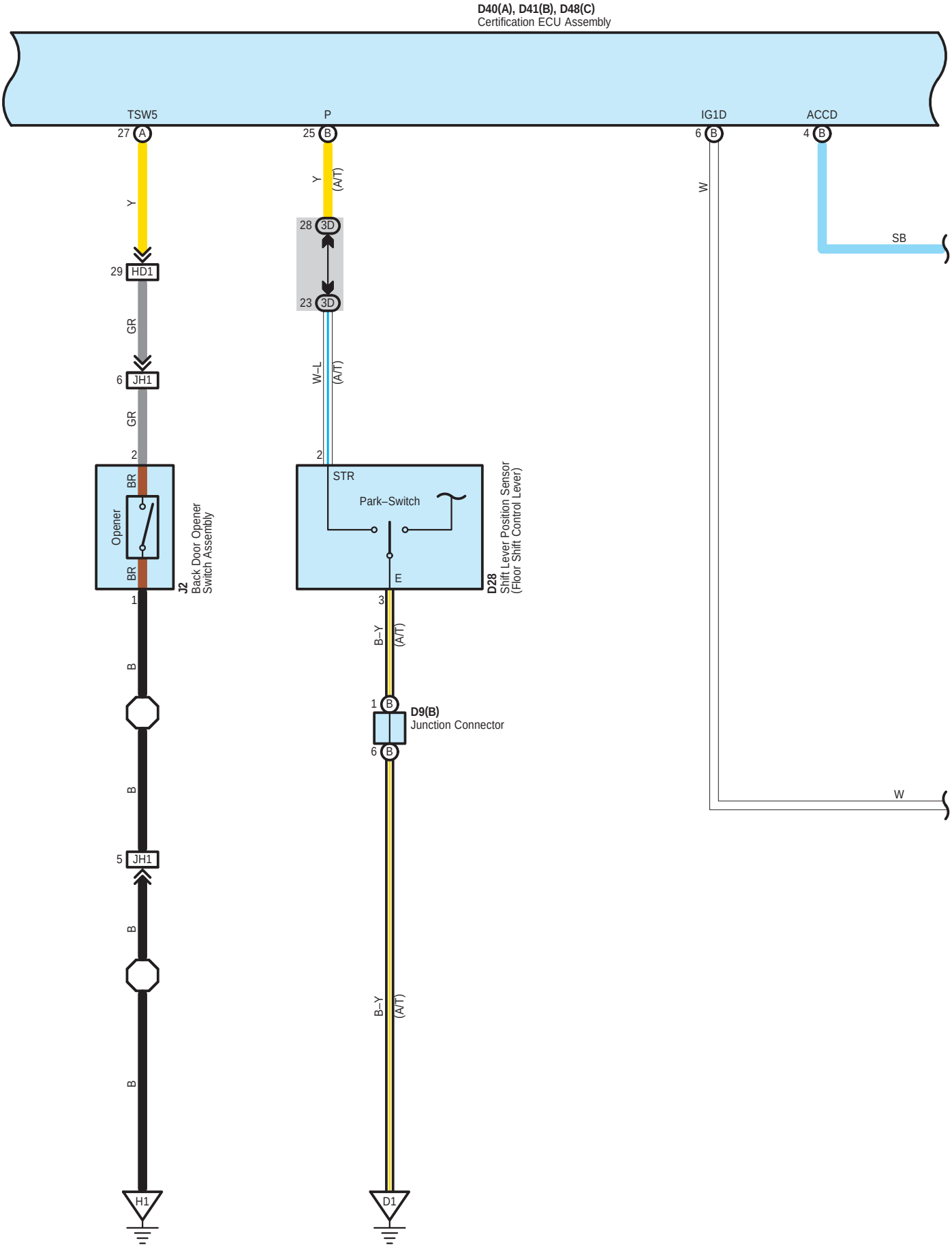
D40(A), D41(B), D48(C)
Certification ECU Assembly
TSW5
P
IG1D
ACCD
27 A
25 B
6 B
4 B
Y
Y (A/T)
W
SB
28 3D
23 3D
29 HD1
GR
6 JH1
GR
W–L (A/T)
2
2
BR
Opener
BR
J2
Back Door Opener Switch Assembly
STR
Park–Switch
E
D28
Shift Lever Position Sensor (Floor Shift Control Lever)
1
3
B
B–Y (A/T)
1 B
D9(B)
Junction Connector
6 B
W
5 JH1
B
B
B–Y (A/T)
H1
D1

D40(A), D41(B), D48(C)
Certification ECU Assembly

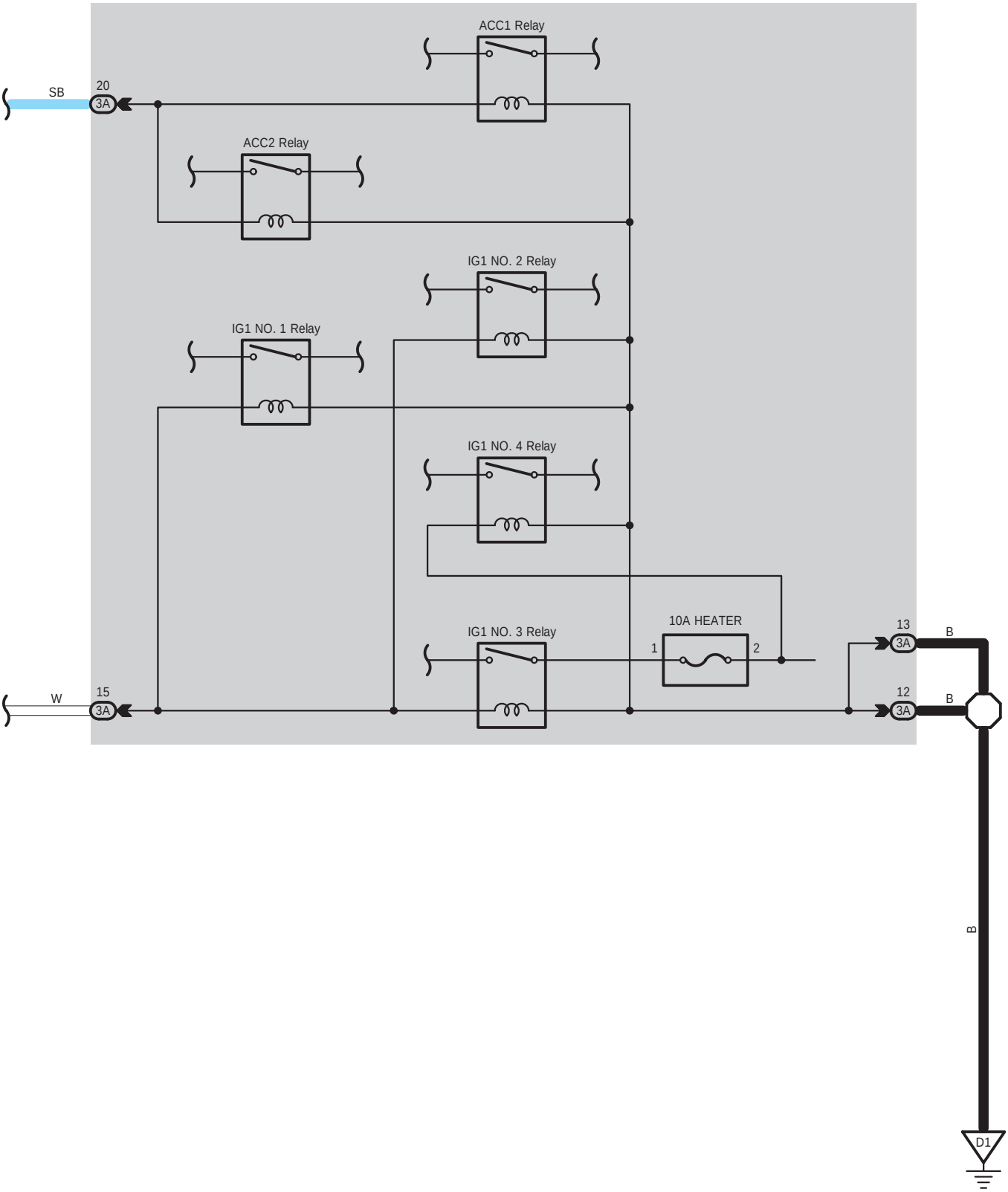

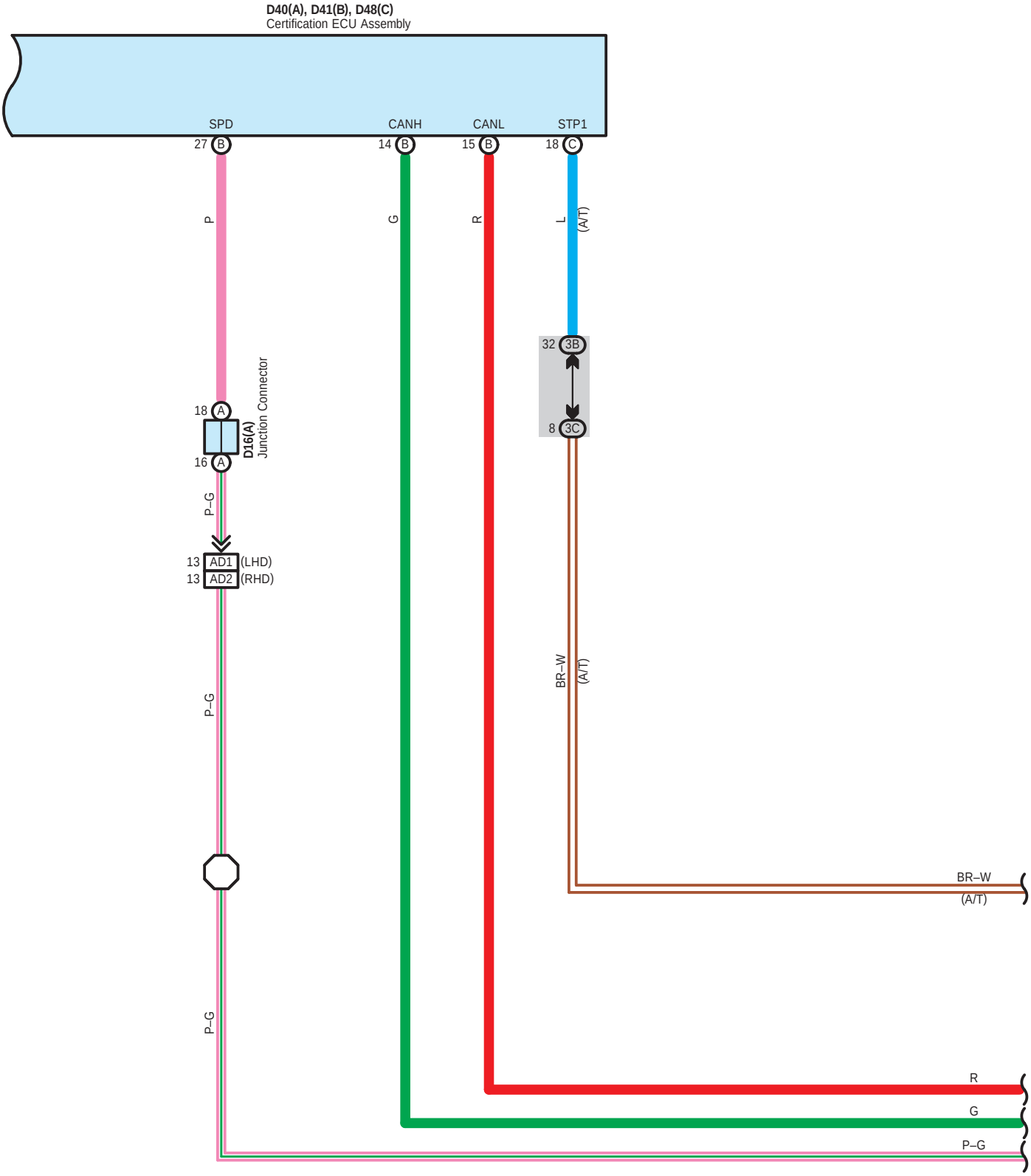
D40(A), D41(B), D48(C)
Certification ECU Assembly
SPD
CANH
CANL
STP1
27 B
14 B
15 B
18 C
P
G
R
L
(A/T)
32 3B
8 3C
18 A
16 A
D16(A)
Junction Connector
P–G
13 AD1 (LHD)
13 AD2 (RHD)
P–G
BR–W
(A/T)
BR–W
(A/T)
P–G
R
G
P–G

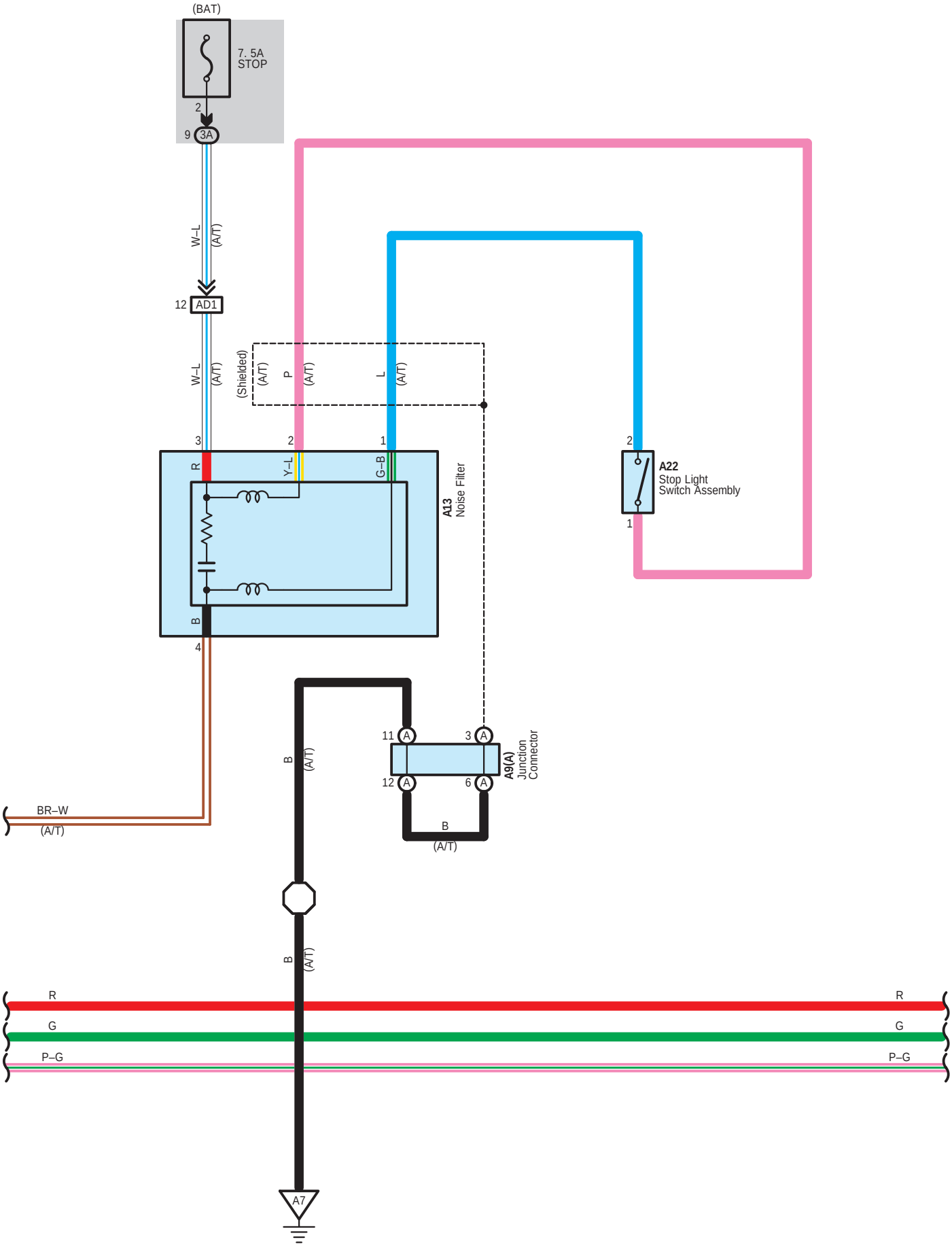
(BAT)
7. 5A
STOP
2
9
3A
W–L
(A/T)
12
AD1
W–L
(A/T)
(Shielded)
(A/T)
P
(A/T)
L
(A/T)
3
2
1
R
Y–L
G–B
A13
Noise Filter
B
4
2
A22
Stop Light
Switch Assembly
1
11
A
3
A
12
A
6
A
A9(A)
Junction
Connector
B
(A/T)
BR–W
(A/T)
B
(A/T)
B
(A/T)
R
G
P–G
R
G
P–G
A7

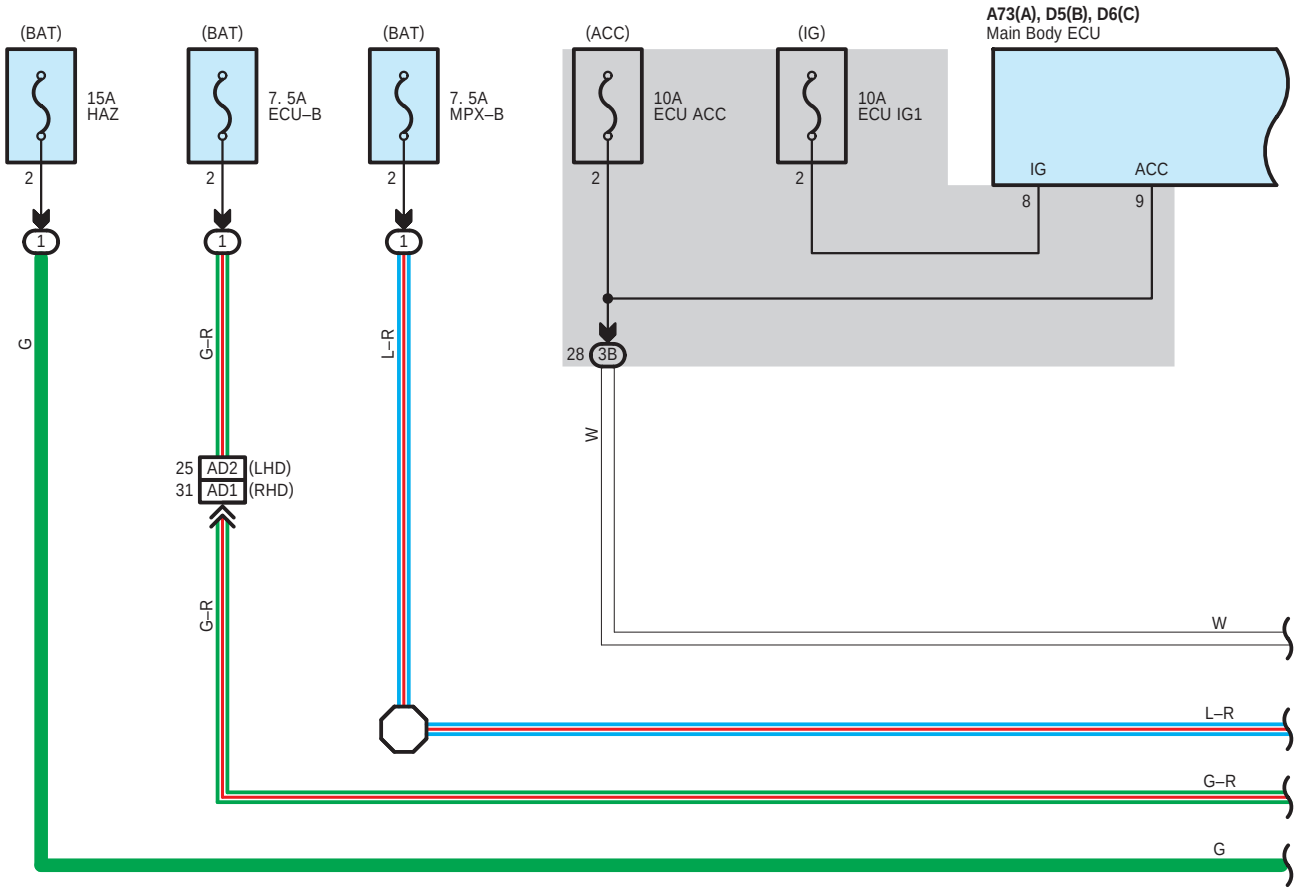
(BAT)
15A
HAZ
(BAT)
7. 5A
ECU–B
(BAT)
7. 5A
MPX–B
(ACC)
10A
ECU ACC
(IG)
10A
ECU IG1
A73(A), D5(B), D6(C)
Main Body ECU
IG
ACC
8
9
2
1
G
G–R
L–R
28 3B
W
25 AD2 (LHD)
31 AD1 (RHD)
W
L–R
G–R
G

R
G
P–G
R
G
P–G

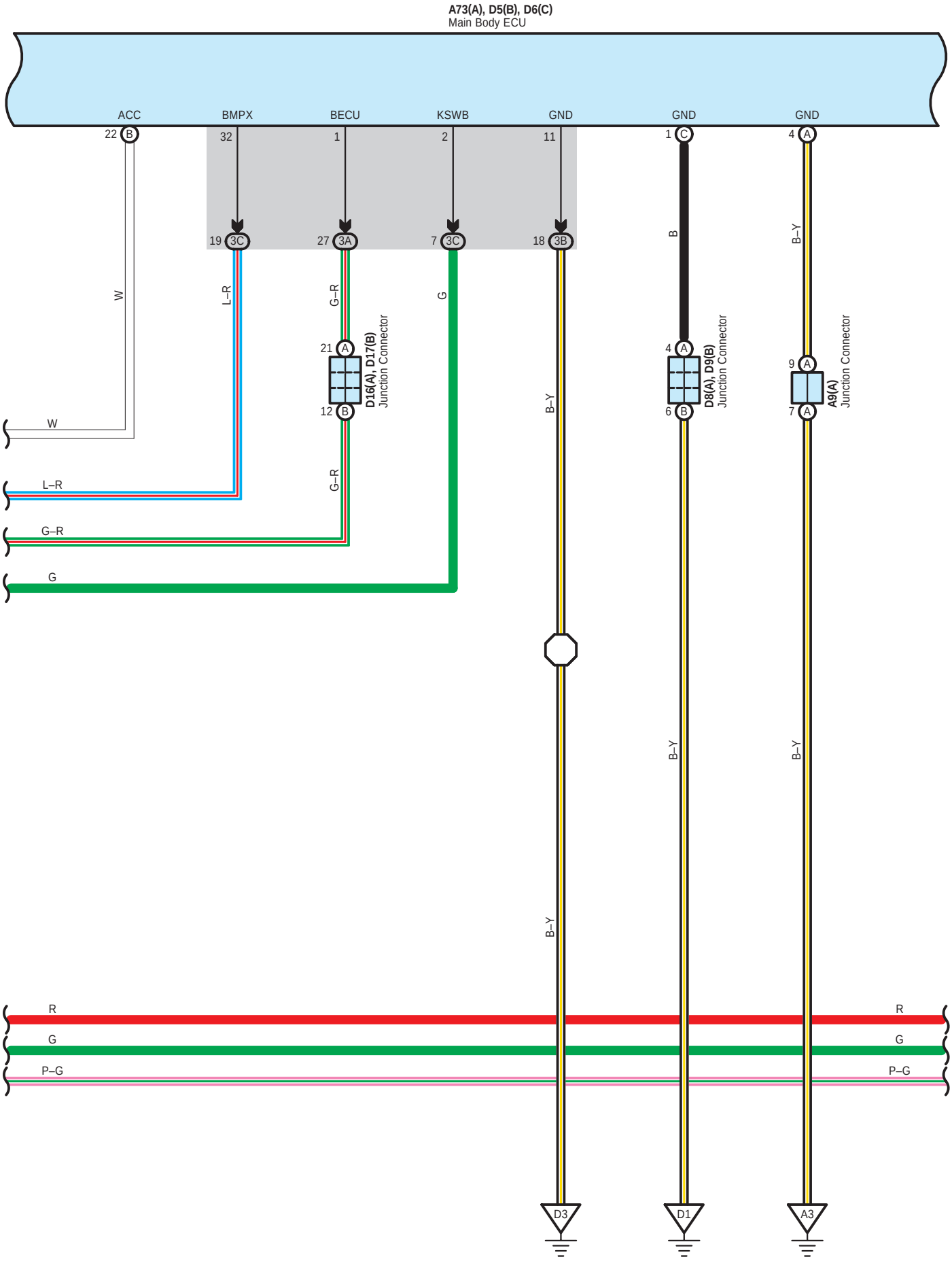
A73(A), D5(B), D6(C)
Main Body ECU
ACC
BMPX
BECU
KSWB
GND
GND
GND
22 B
32
1
2
11
1 C
4 A
19 3C
27 3A
7 3C
18 3B
W
L–R
G–R
G
B
B–Y
21 A
12 B
D16(A), D17(B)
Junction Connector
4 A
6 B
D8(A), D9(B)
Junction Connector
9 A
7 A
A9(A)
Junction Connector
W
L–R
G–R
G
B–Y
B–Y
B–Y
B–Y
R
G
P–G
R
G
P–G
D3
D1
A3

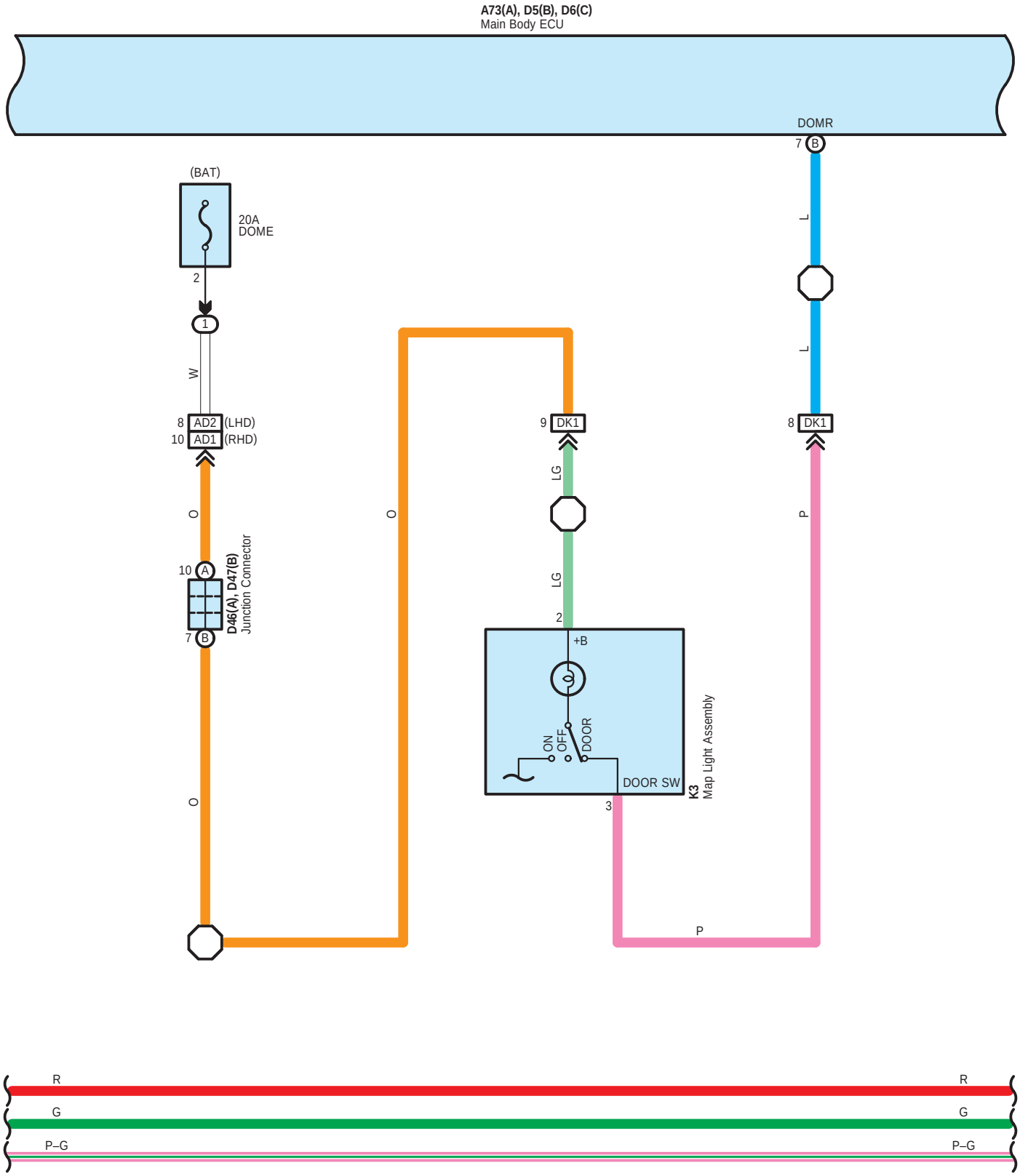
A73(A), D5(B), D6(C)
Main Body ECU
DOMR
7 B
(BAT)
20A
DOME
2
1
W
8 AD2 (LHD)
10 AD1 (RHD)
O
10 A
7 B
D46(A), D47(B)
Junction Connector
O
O
9 DK1
LG
LG
2
+B
ON
OFF
DOOR
DOOR SW
3
K3
Map Light Assembly
L
L
8 DK1
P
P
R
G
P–G
R
G
P–G

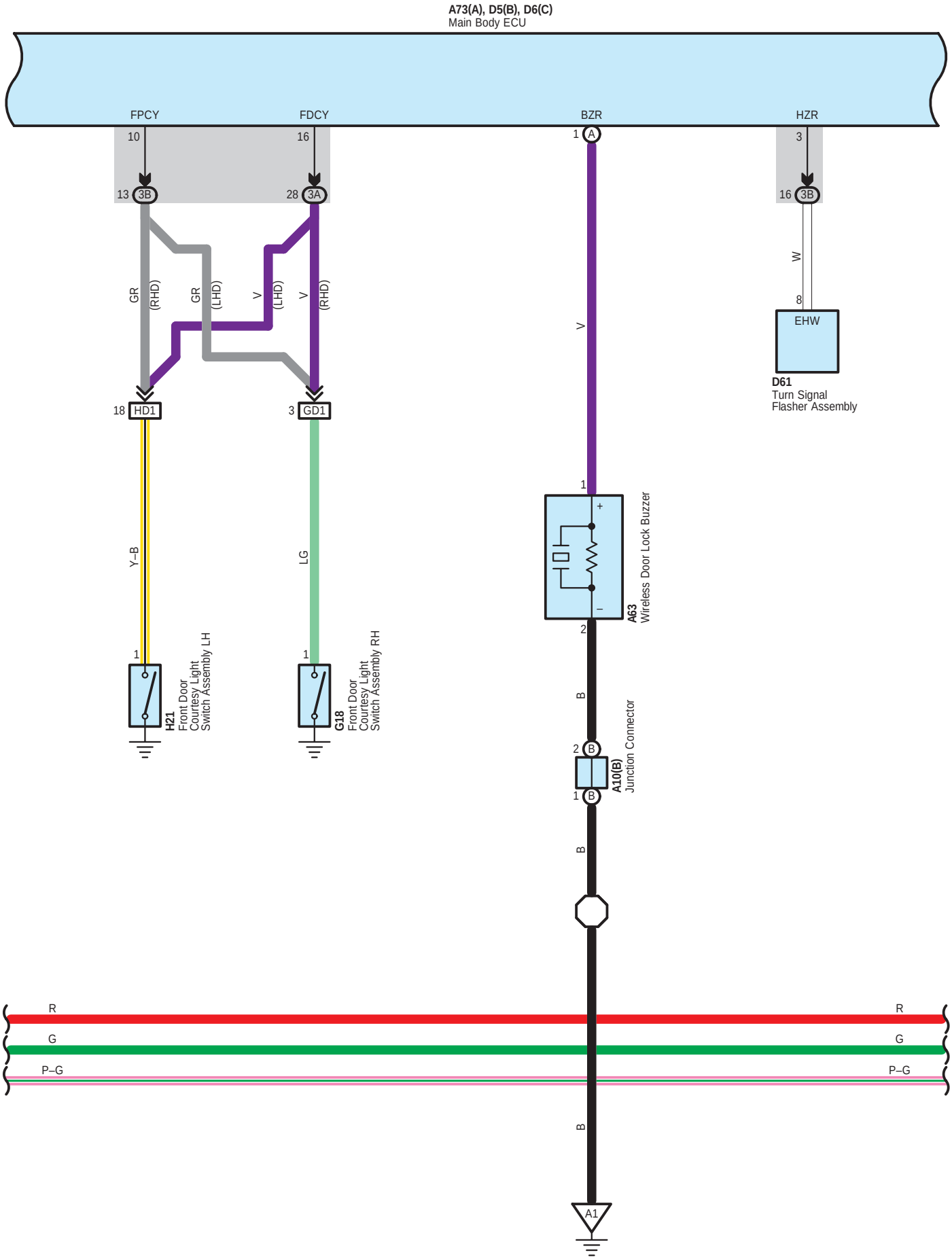
A73(A), D5(B), D6(C)
Main Body ECU
FPCY
FDCY
BZR
HZR
10
16
1 A
3
13 3B
28 3A
16 3B
GR (RHD)
GR (LHD)
V (LHD)
V (RHD)
V
W
8
EHW
D61
Turn Signal
Flasher Assembly
18 HD1
3 GD1
Y–B
LG
1
2
A63
Wireless Door Lock Buzzer
B
2 B
1 B
A10(B)
Junction Connector
H21
Front Door
Courtesy Light
Switch Assembly LH
G18
Front Door
Courtesy Light
Switch Assembly RH
R
G
P–G
A1

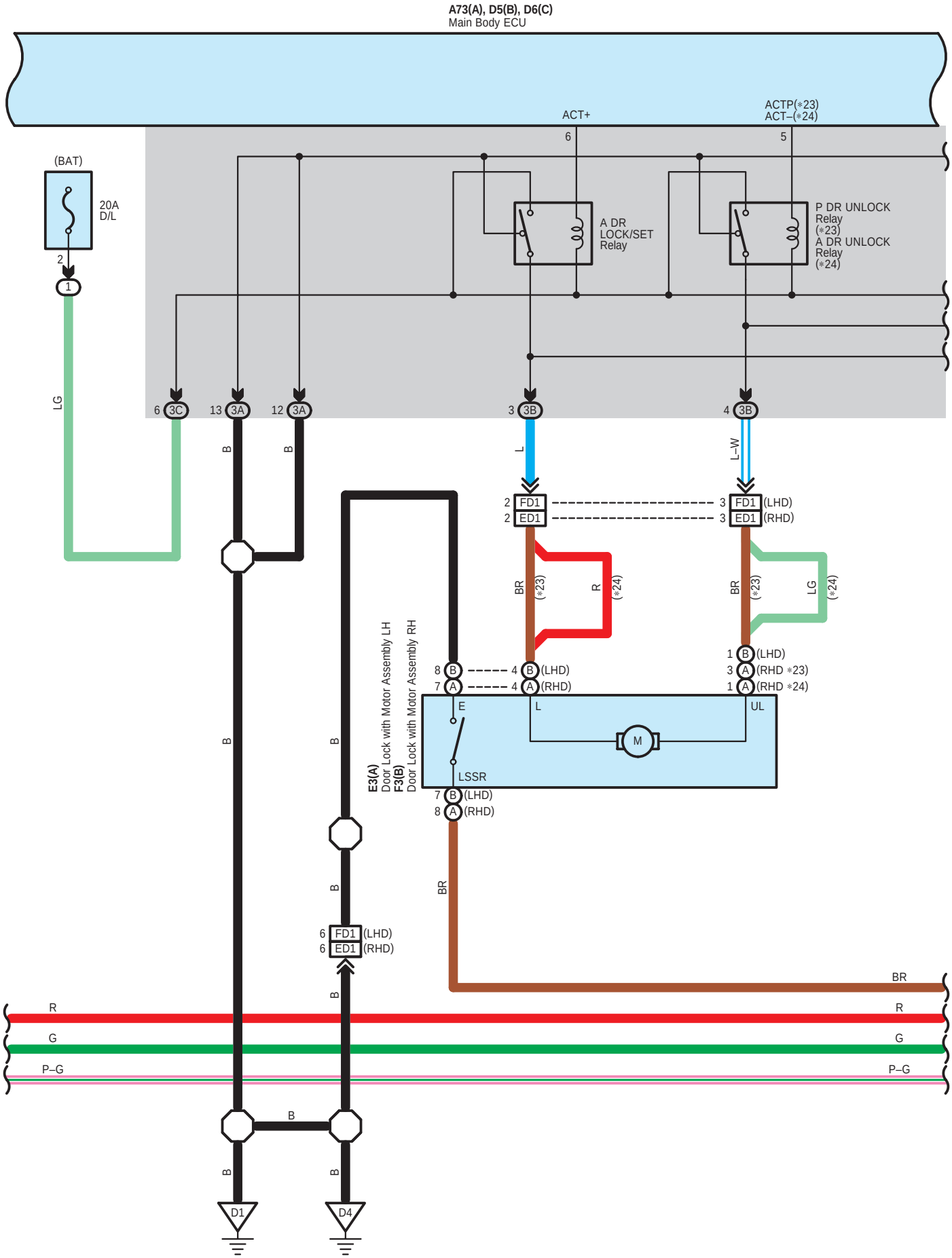
A73(A), D5(B), D6(C)
Main Body ECU
ACT+
ACTP(*23)
ACT–(*24)
(BAT)
20A
D/L
A DR
LOCK/SET
Relay
P DR UNLOCK
Relay
(*23)
A DR UNLOCK
Relay
(*24)
FD1
ED1
(LHD)
(RHD)
(RHD *23)
(RHD *24)
E3(A)
Door Lock with Motor Assembly LH
F3(B)
Door Lock with Motor Assembly RH
LSSR
D1
D4

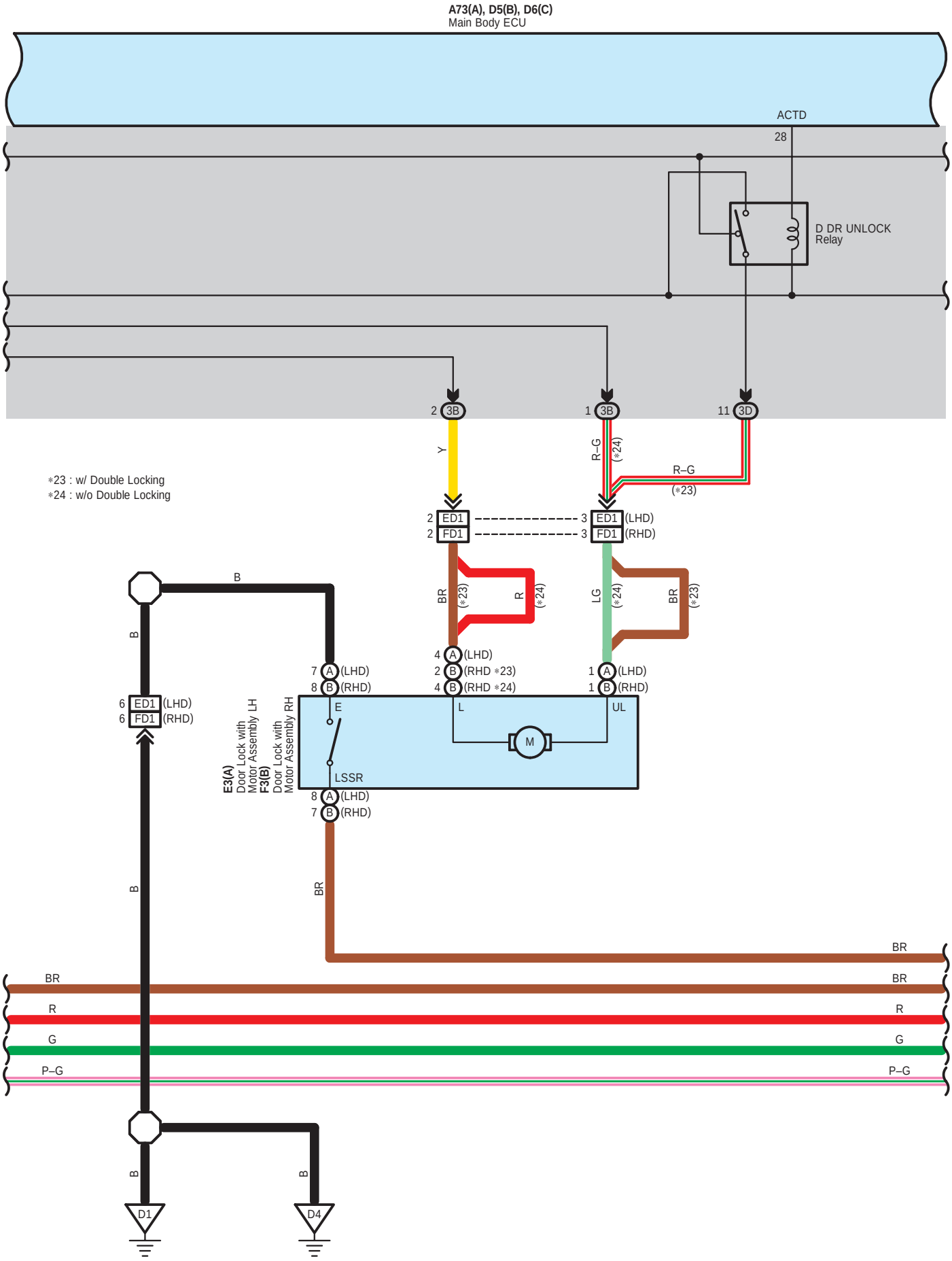
A73(A), D5(B), D6(C)
Main Body ECU
ACTD
28
D DR UNLOCK
Relay
2 3B
1 3B
11 3D
Y
R–G
(*24)
R–G
(*23)
*23 : w/ Double Locking
*24 : w/o Double Locking
2 ED1
2 FD1
3 ED1 (LHD)
3 FD1 (RHD)
BR
(*23)
R
(*24)
LG
(*24)
BR
(*23)
B
B
6 ED1 (LHD)
6 FD1 (RHD)
7 A (LHD)
8 B (RHD)
4 A (LHD)
2 B (RHD *23)
4 B (RHD *24)
1 A (LHD)
1 B (RHD)
E3(A)
Door Lock with
Motor Assembly LH
F3(B)
Door Lock with
Motor Assembly RH
E
L
UL
M
LSSR
8 A (LHD)
7 B (RHD)
BR
BR
BR
BR
R
R
G
G
P–G
P–G
B
B
D1
D4

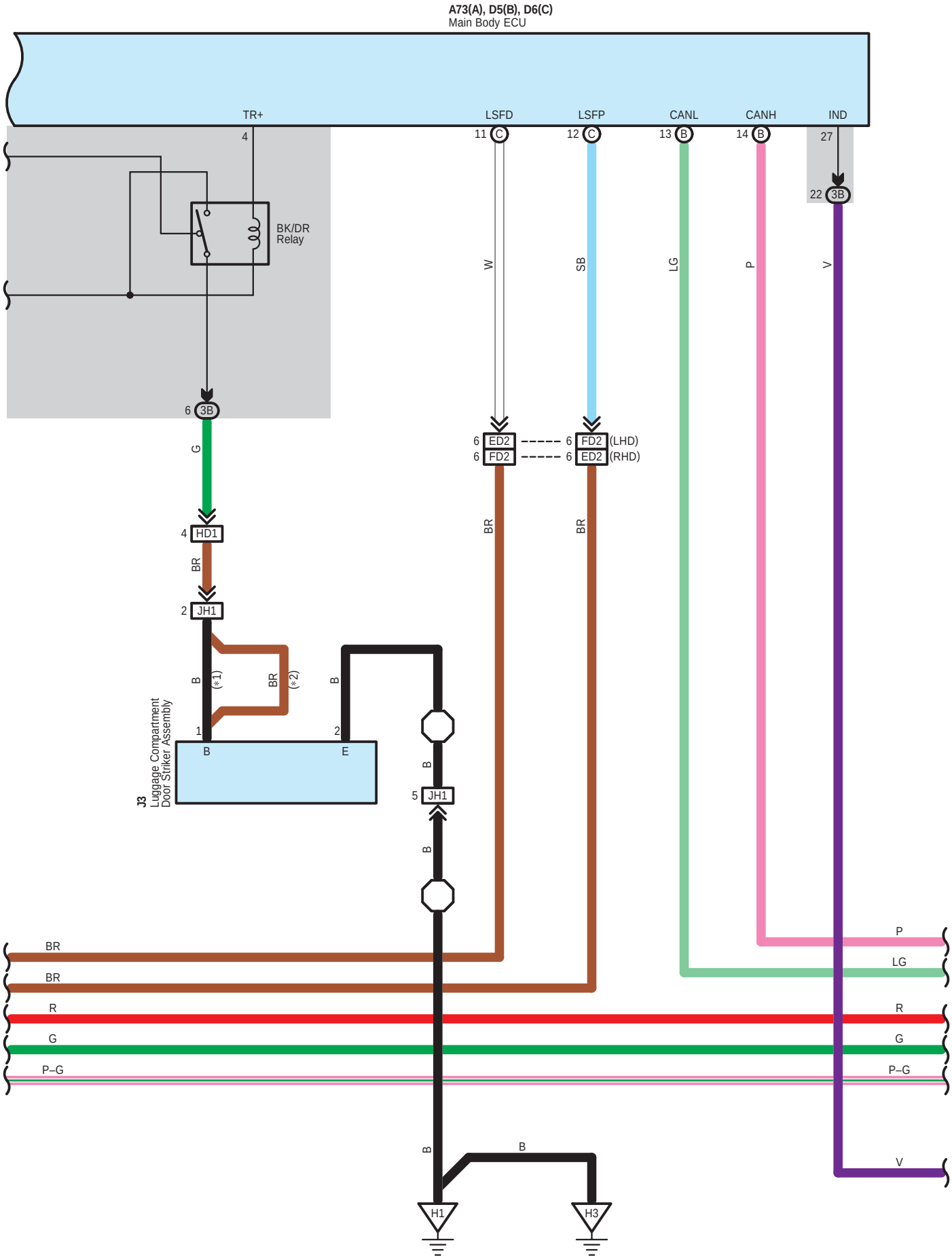
A73(A), D5(B), D6(C)
Main Body ECU
TR+
LSFD
LSFP
CANL
CANH
IND
4
11 C
12 C
13 B
14 B
27
22 3B
BK/DR
Relay
W
SB
LG
P
V
6 3B
G
6 ED2
6 FD2
6 FD2 (LHD)
6 ED2 (RHD)
BR
BR
4 HD1
BR
2 JH1
B
(*1)
BR
(*2)
B
1
2
B
E
J3
Luggage Compartment
Door Striker Assembly
B
5 JH1
B
BR
BR
R
G
P–G
P
LG
R
G
P–G
V
B
B
H1
H3

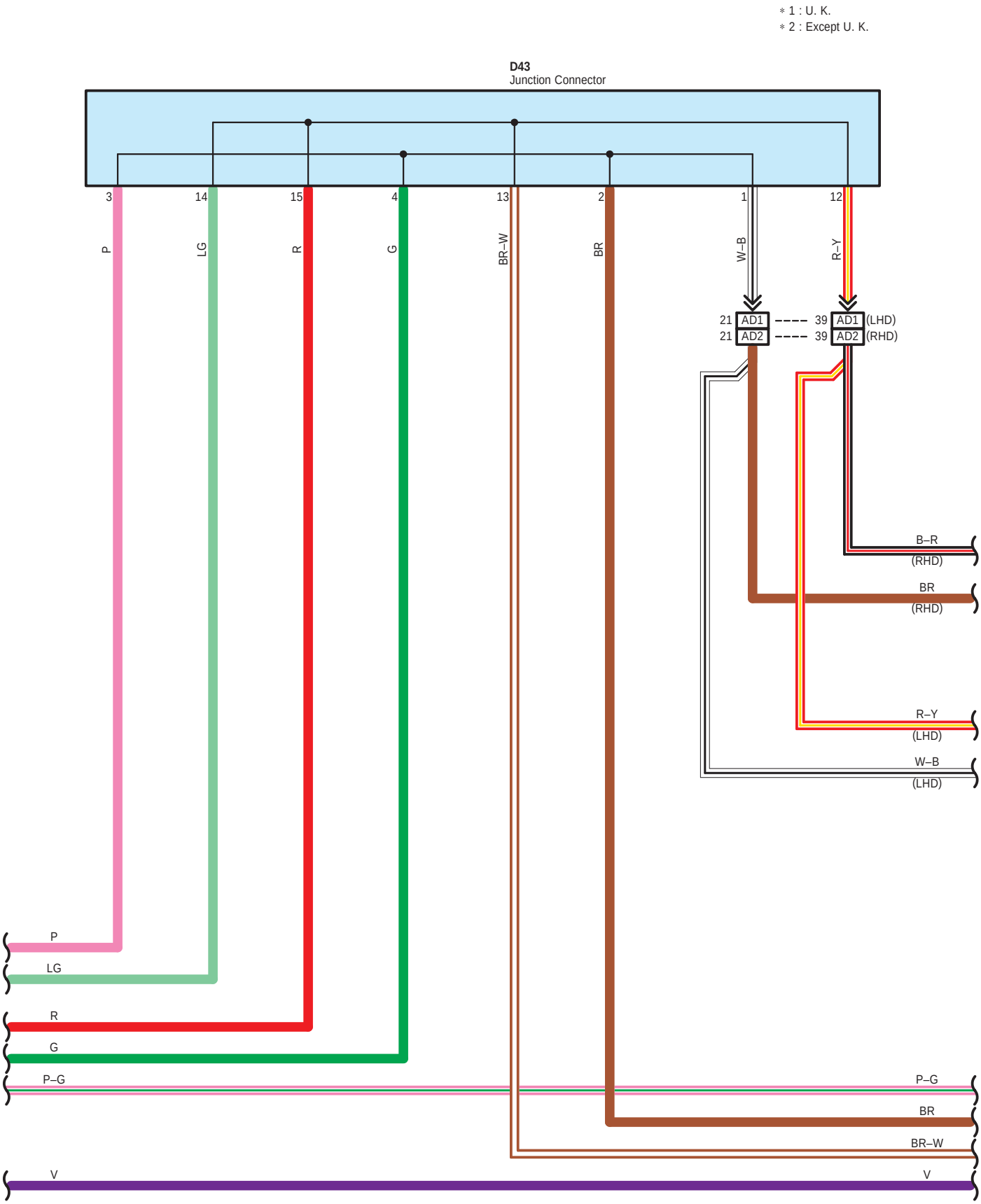
∗ 1 : U. K.
∗ 2 : Except U. K.
D43
Junction Connector
3
14
15
4
13
2
1
12
P
LG
R
G
BR–W
BR
W–B
R–Y
21 AD1
21 AD2
39 AD1 (LHD)
39 AD2 (RHD)
B–R
(RHD)
BR
(RHD)
R–Y
(LHD)
W–B
(LHD)
P
LG
R
G
P–G
P–G
BR
BR–W
V
V

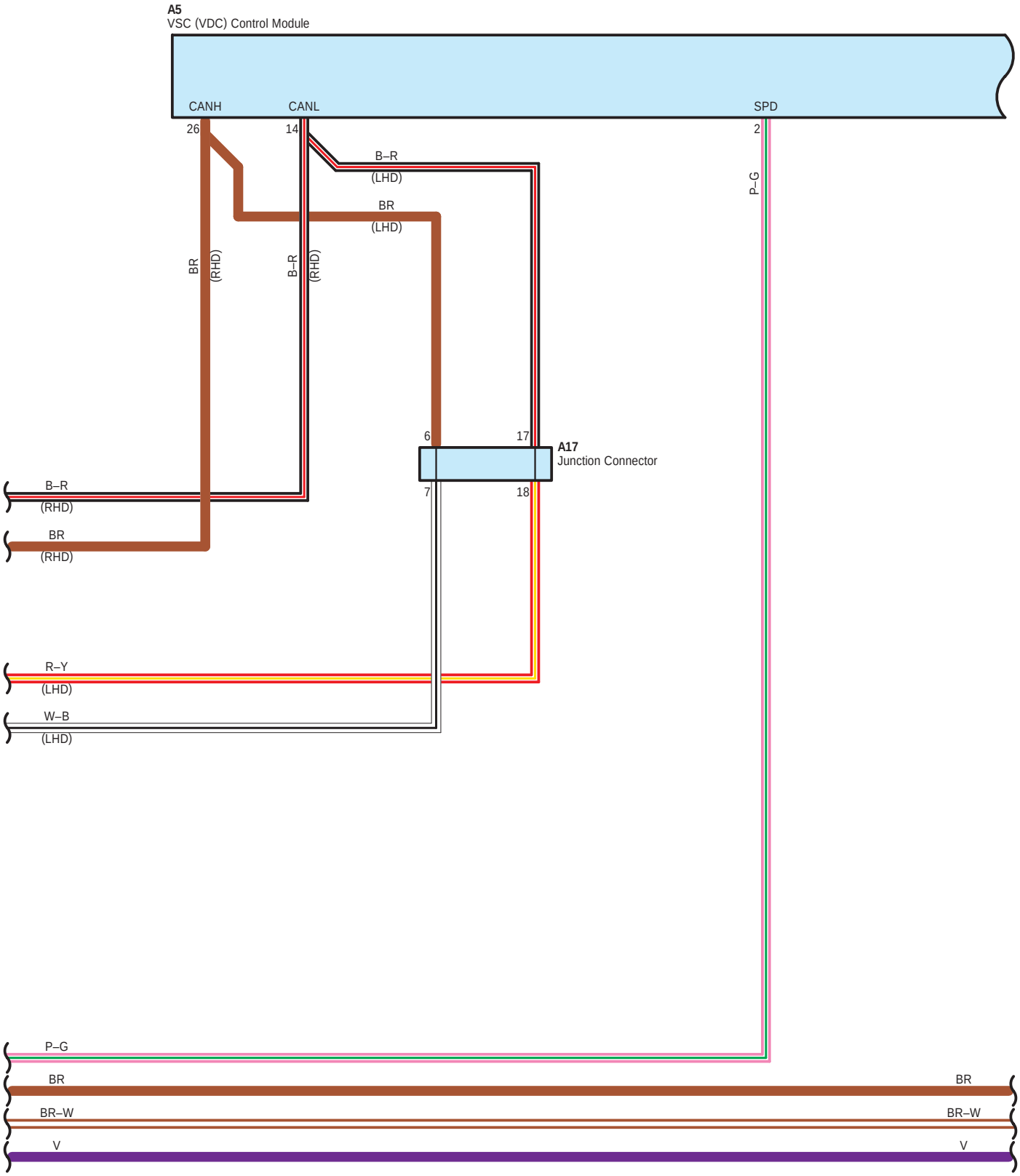
A5
VSC (VDC) Control Module
CANH
CANL
SPD
26
14
2
B–R
(LHD)
BR
(LHD)
P–G
BR
(RHD)
B–R
(RHD)
6
17
A17
Junction Connector
7
18
B–R
(RHD)
BR
(RHD)
R–Y
(LHD)
W–B
(LHD)
P–G
BR
BR
BR–W
BR–W
V
V

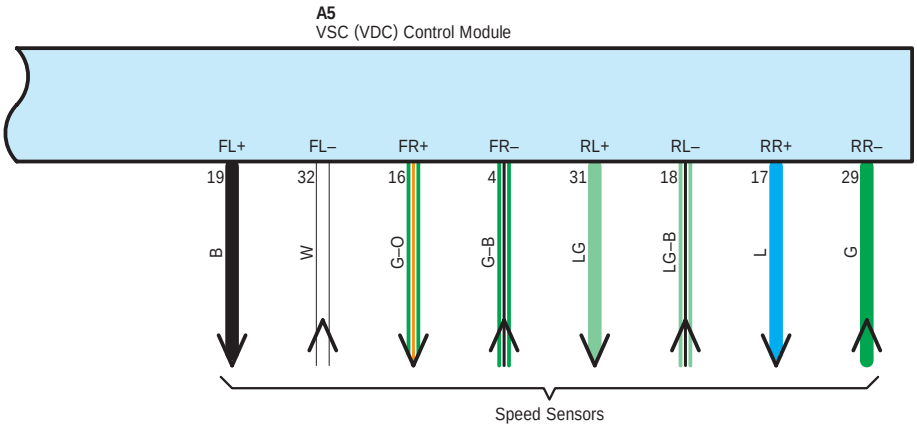
A5
VSC (VDC) Control Module
FL+
FL–
FR+
FR–
RL+
RL–
RR+
RR–
19
32
16
4
31
18
17
29
B
W
G–O
G–B
LG
LG–B
L
G
Speed Sensors

BR
BR
BR–W
BR–W
V
V

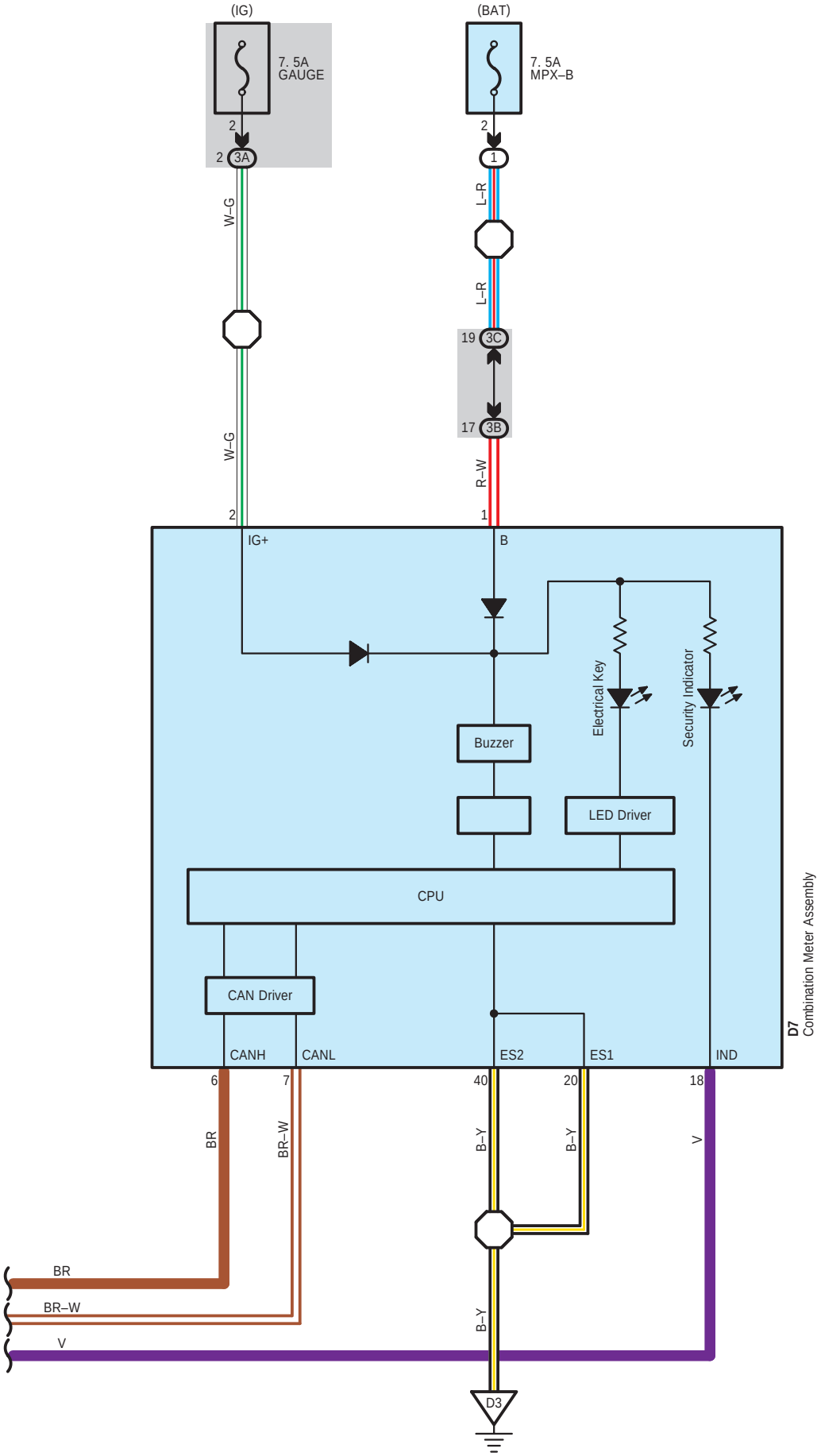
(IG)
7. 5A
GAUGE
2
2
3A
W–G
W–G
2
IG+
(BAT)
7. 5A
MPX–B
2
1
L–R
L–R
19
3C
17
3B
R–W
1
B
Electrical Key
Security Indicator
Buzzer
LED Driver
CPU
CAN Driver
CANH
CANL
ES2
ES1
IND
D7
Combination Meter Assembly
6
7
40
20
18
BR
BR–W
B–Y
B–Y
V
BR
BR–W
V
B–Y
D3

○ : Parts Location

Code		See Page	Code		See Page	Code		See Page
A5		39 (LHD)	D5	B	40 (LHD)	D59		41 (LHD)
		47 (RHD)			48 (RHD)			49 (RHD)
A9	A	42 (LHD)	D6	C	40 (LHD)	D61		41 (LHD)
		50 (RHD)			48 (RHD)			49 (RHD)
A10	B	42 (LHD)	D7		40 (LHD)	E1		44 (LHD)
		50 (RHD)			48 (RHD)			52 (RHD)
A13		42 (LHD)	D8	A	40 (LHD)	E3	A	44 (LHD)
		50 (RHD)			48 (RHD)			52 (RHD)
A17		42 (LHD)	D9	B	40 (LHD)	F3	B	44 (LHD)
A20		42 (LHD)			48 (RHD)			52 (RHD)
		50 (RHD)	D16	A	40 (LHD)	F5		44 (LHD)
A22		42 (LHD)			48 (RHD)			52 (RHD)
		50 (RHD)	D17	B	40 (LHD)	G18		44 (LHD)
A30		50 (RHD)			48 (RHD)			52 (RHD)
A33	A	42 (LHD)	D25		40 (LHD)	H3		45 (LHD)
		50 (RHD)			48 (RHD)			53 (RHD)
A35	C	42 (LHD)	D26		40 (LHD)	H9		45 (LHD)
		50 (RHD)			48 (RHD)			53 (RHD)
A37		42 (LHD)	D28		40 (LHD)	H15		45 (LHD)
		50 (RHD)			48 (RHD)			53 (RHD)
A54		39 (LHD)	D40	A	41 (LHD)	H21		45 (LHD)
		47 (RHD)			49 (RHD)			53 (RHD)
A63		39 (LHD)	D41	B	41 (LHD)	H26		45 (LHD)
		47 (RHD)			49 (RHD)			53 (RHD)
A66	A	50 (RHD)	D43		41 (LHD)	J2		45 (LHD)
A72	B	50 (RHD)			49 (RHD)			53 (RHD)
A73	A	42 (LHD)	D46	A	41 (LHD)	J3		45 (LHD)
		50 (RHD)			49 (RHD)			53 (RHD)
B1	A	39 (LHD)	D47	B	41 (LHD)	K3		45 (LHD)
		47 (RHD)			49 (RHD)			53 (RHD)
B2	B	39 (LHD)	D48	C	41 (LHD)	L2		39 (LHD)
		47 (RHD)			49 (RHD)			47 (RHD)

⬭ : Relay Blocks

Code	See Page	Relay Blocks (Relay Block Location)
1	24	Engine Room R/B (Engine Compartment Right)

⬭ : Junction Block and Wire Harness Connector

Code	See Page	Junction Block and Wire Harness (Connector Location)
3A	26	Instrument Panel Wire and Instrument Panel J/B Assembly (Instrument Panel Reinforcement)
3B		
3C	26	Engine Room Main Wire and Instrument Panel J/B Assembly (Instrument Panel Reinforcement)
3D	26	Instrument Panel Wire and Instrument Panel J/B Assembly (Instrument Panel Reinforcement)

▭ : Connector Joining Wire Harness and Wire Harness

Code	See Page	Joining Wire Harness and Wire Harness (Connector Location)
AB1	54 (LHD)	Engine Room Main Wire and No. 2 Engine Room Wire (Engine Unit)
	58 (RHD)	
AD1	55 (LHD)	Engine Room Main Wire and Instrument Panel Wire (Cowl Side Panel RH)
	59 (RHD)	
AD2	55 (LHD)	Engine Room Main Wire and Instrument Panel Wire (Instrument Panel Reinforcement)
	59 (RHD)	
AL2	54 (LHD)	Engine Room Main Wire and Transmission Wire (Dash Panel)
	58 (RHD)	
DK1	55 (LHD)	Instrument Panel Wire and Roof Wire (Front Body Inner Pillar RH)
	59 (RHD)	

: Connector Joining Wire Harness and Wire Harness

Code	See Page	Joining Wire Harness and Wire Harness (Connector Location)
ED1	55 (LHD)	Front Door Wire LH and Instrument Panel Wire (Cowl Side Panel LH)
	59 (RHD)	
ED2	55 (LHD)	
	59 (RHD)	
FD1	55 (LHD)	Front Door Wire RH and Instrument Panel Wire (Cowl Side Panel RH)
	59 (RHD)	
FD2	55 (LHD)	
	59 (RHD)	
GD1	55 (LHD)	No. 1 Floor Wire and Instrument Panel Wire (Cowl Side Panel RH)
	59 (RHD)	
HD1	55 (LHD)	No. 2 Floor Wire and Instrument Panel Wire (Cowl Side Panel LH)
	59 (RHD)	
JH1	56 (LHD)	Luggage Room Wire and No. 2 Floor Wire (Quarter Panel LH)
	60 (RHD)	

: Ground Points

Code	See Page	Ground Points Location
A1	54 (LHD)	Front Fender Apron LH
	58 (RHD)	
A3	55 (LHD)	Cowl Side Panel RH
	59 (RHD)	Cowl Side Panel LH
A7	54 (LHD)	Front Fender Apron RH
	58 (RHD)	
D1	55 (LHD)	Cowl Side Panel LH
	59 (RHD)	Cowl Side Panel RH
D3	55 (LHD)	Instrument Panel Brace RH
	59 (RHD)	Instrument Panel Brace LH
D4	55 (LHD)	Cowl Side Panel RH
	59 (RHD)	Cowl Side Panel LH
H1	56 (LHD)	Lower Back Panel
	60 (RHD)	
H3	56 (LHD)	Quarter Wheel House Panel LH
	60 (RHD)	

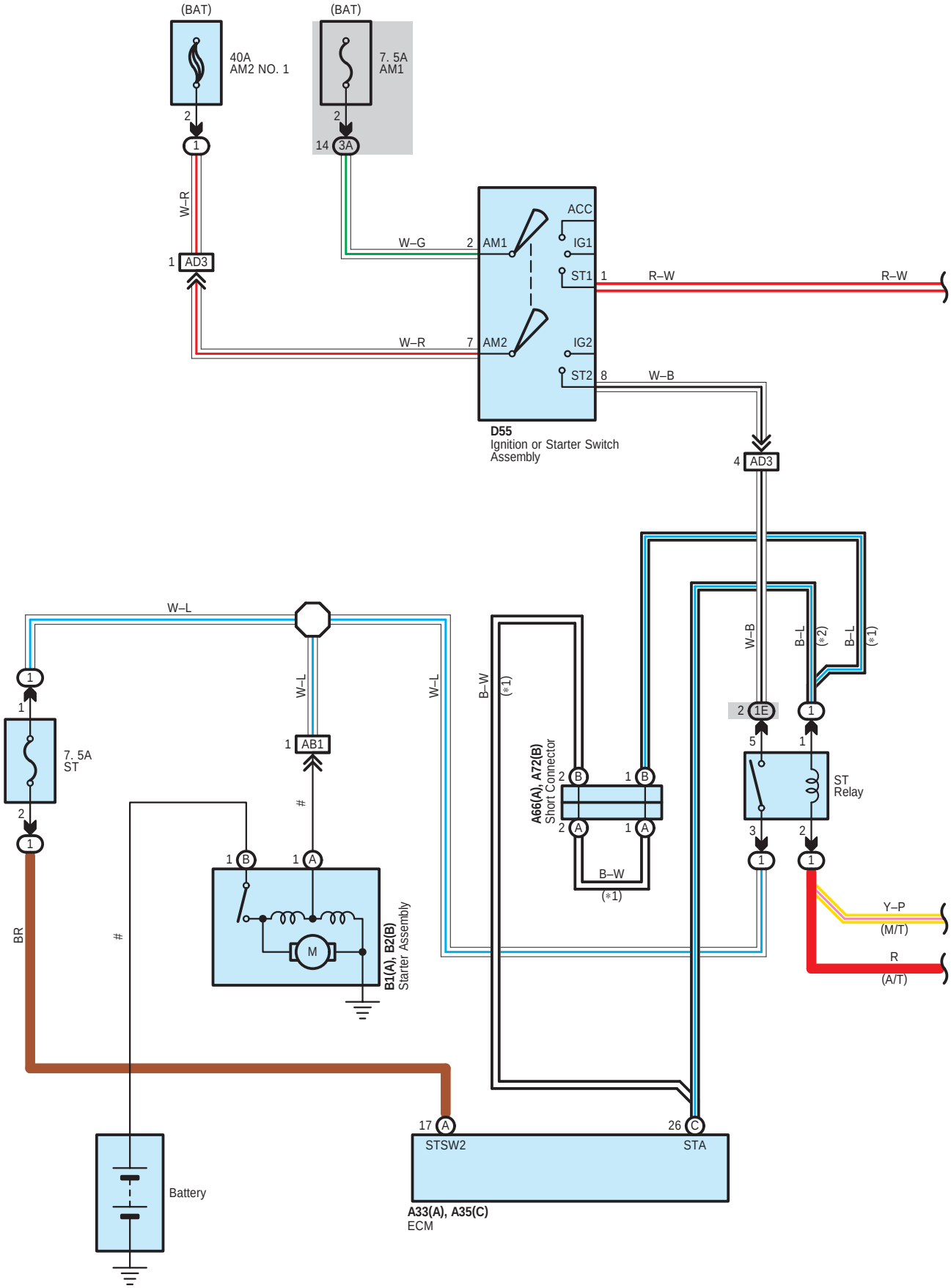
(BAT)
40A
AM2 NO. 1
(BAT)
7. 5A
AM1
W–R
AD3
W–G
AM1
AM2
W–R
ACC
IG1
ST1
R–W
R–W
IG2
ST2
W–B
D55
Ignition or Starter Switch
Assembly
AD3
W–L
7. 5A
ST
W–L
AB1
W–L
B–W
(*1)
A66(A), A72(B)
Short Connector
B–W
(*1)
W–B
B–L
(*2)
B–L
(*1)
1E
ST
Relay
Y–P
(M/T)
R
(A/T)
BR
B1(A), B2(B)
Starter Assembly
STSW2
STA
A33(A), A35(C)
ECM
Battery

: There is no wire color information.

∗ 1 : U. K.
∗ 2 : Except U. K.

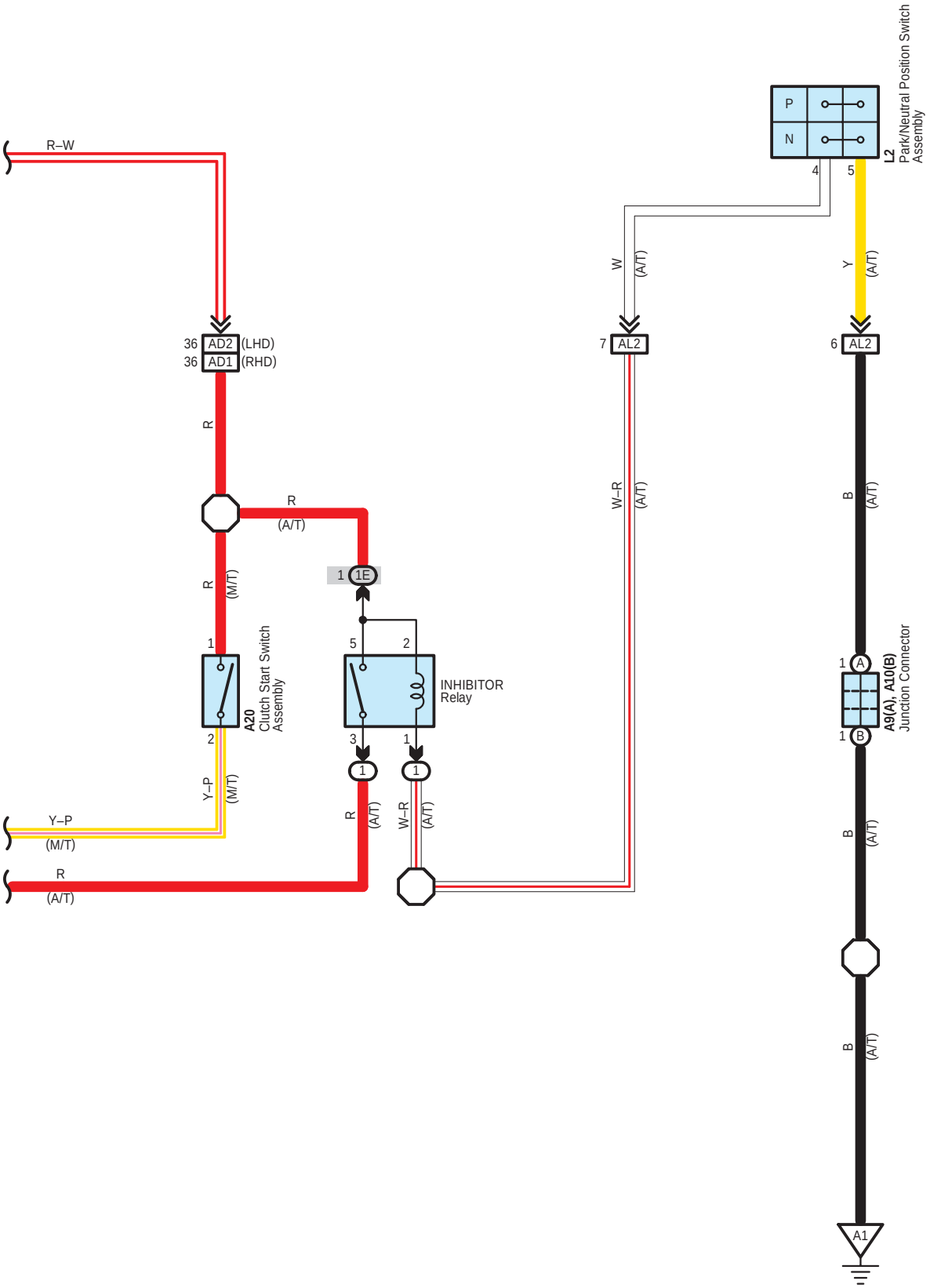

○ : **Parts Location**

Code		See Page	Code		See Page	Code		See Page
A9	A	42 (LHD)	A33	A	50 (RHD)	B2	B	39 (LHD)
		50 (RHD)	A35	C	42 (LHD)			47 (RHD)
A10	B	42 (LHD)			50 (RHD)	D55		41 (LHD)
		50 (RHD)	A66	A	50 (RHD)			49 (RHD)
A20		42 (LHD)	A72	B	50 (RHD)	L2		39 (LHD)
		50 (RHD)	B1	A	39 (LHD)			47 (RHD)
A33	A	42 (LHD)			47 (RHD)			

▭ : **Relay Blocks**

Code	See Page	Relay Blocks (Relay Block Location)
1	24	Engine Room R/B (Engine Compartment Right)

▭ : **Junction Block and Wire Harness Connector**

Code	See Page	Junction Block and Wire Harness (Connector Location)
1E	24	Engine Room Main Wire and Engine Room J/B (Engine Compartment Right)
3A	26	Instrument Panel Wire and Instrument Panel J/B Assembly (Instrument Panel Reinforcement)

▭ : **Connector Joining Wire Harness and Wire Harness**

Code	See Page	Joining Wire Harness and Wire Harness (Connector Location)
AB1	54 (LHD)	Engine Room Main Wire and No. 2 Engine Room Wire (Engine Unit)
	58 (RHD)	
AD1	59 (RHD)	Engine Room Main Wire and Instrument Panel Wire (Cowl Side Panel RH)
AD2	55 (LHD)	Engine Room Main Wire and Instrument Panel Wire (Instrument Panel Reinforcement)
AD3	55 (LHD)	Engine Room Main Wire and Instrument Panel Wire (Cowl Side Panel LH)
	59 (RHD)	Engine Room Main Wire and Instrument Panel Wire (Cowl Side Panel RH)
AL2	54 (LHD)	Engine Room Main Wire and Transmission Wire (Dash Panel)
	58 (RHD)	

▽ : **Ground Points**

Code	See Page	Ground Points Location
A1	54 (LHD)	Front Fender Apron LH
	58 (RHD)	

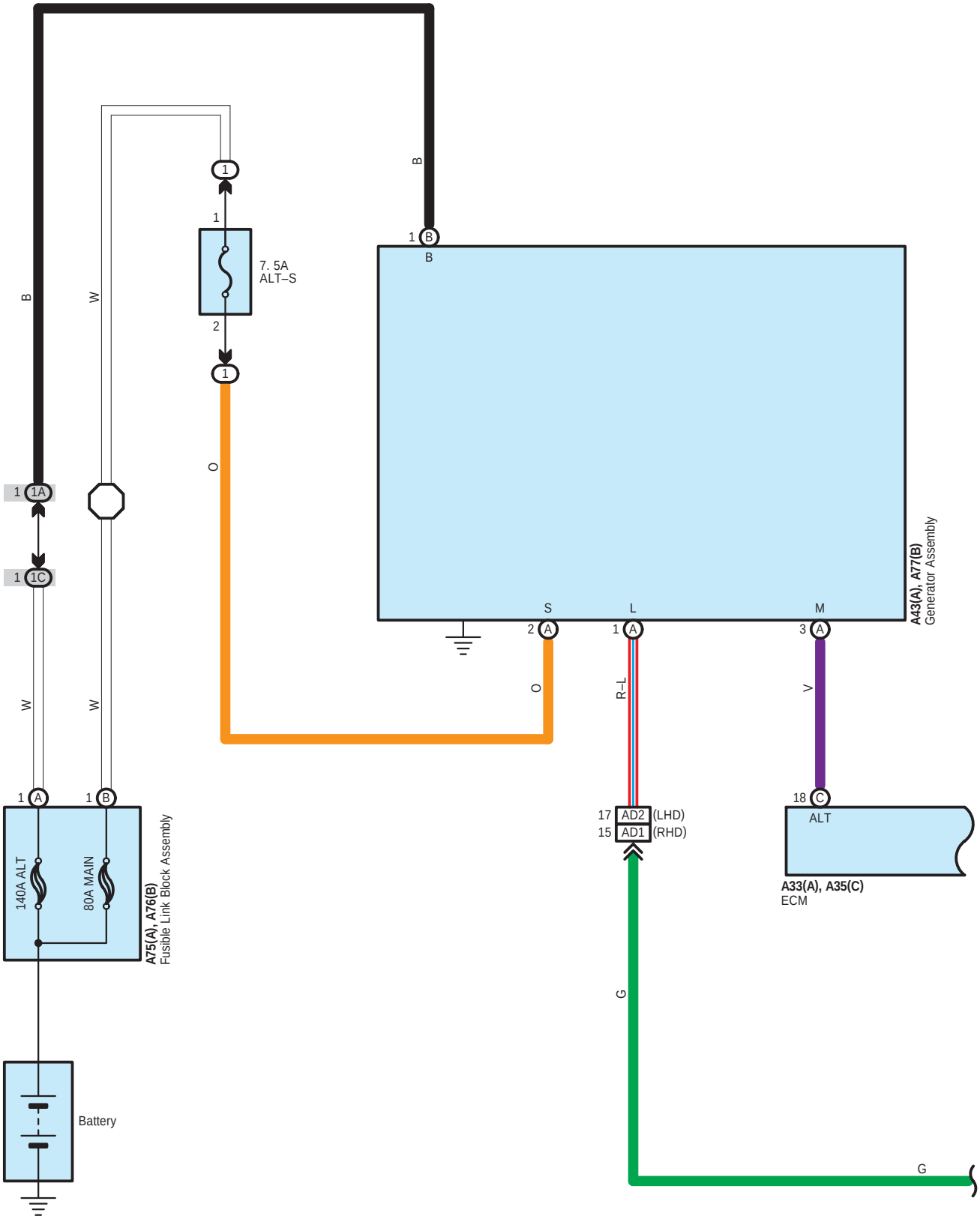
B
W
1
1
7. 5A
ALT–S
2
1
B
1 B
B
O
1 1A
1 1C
W
W
S
L
M
2 A
1 A
3 A
A43(A), A77(B)
Generator Assembly
O
R–L
V
1 A
1 B
140A ALT
80A MAIN
A75(A), A76(B)
Fusible Link Block Assembly
17 AD2 (LHD)
15 AD1 (RHD)
18 C
ALT
A33(A), A35(C)
ECM
G
Battery
G

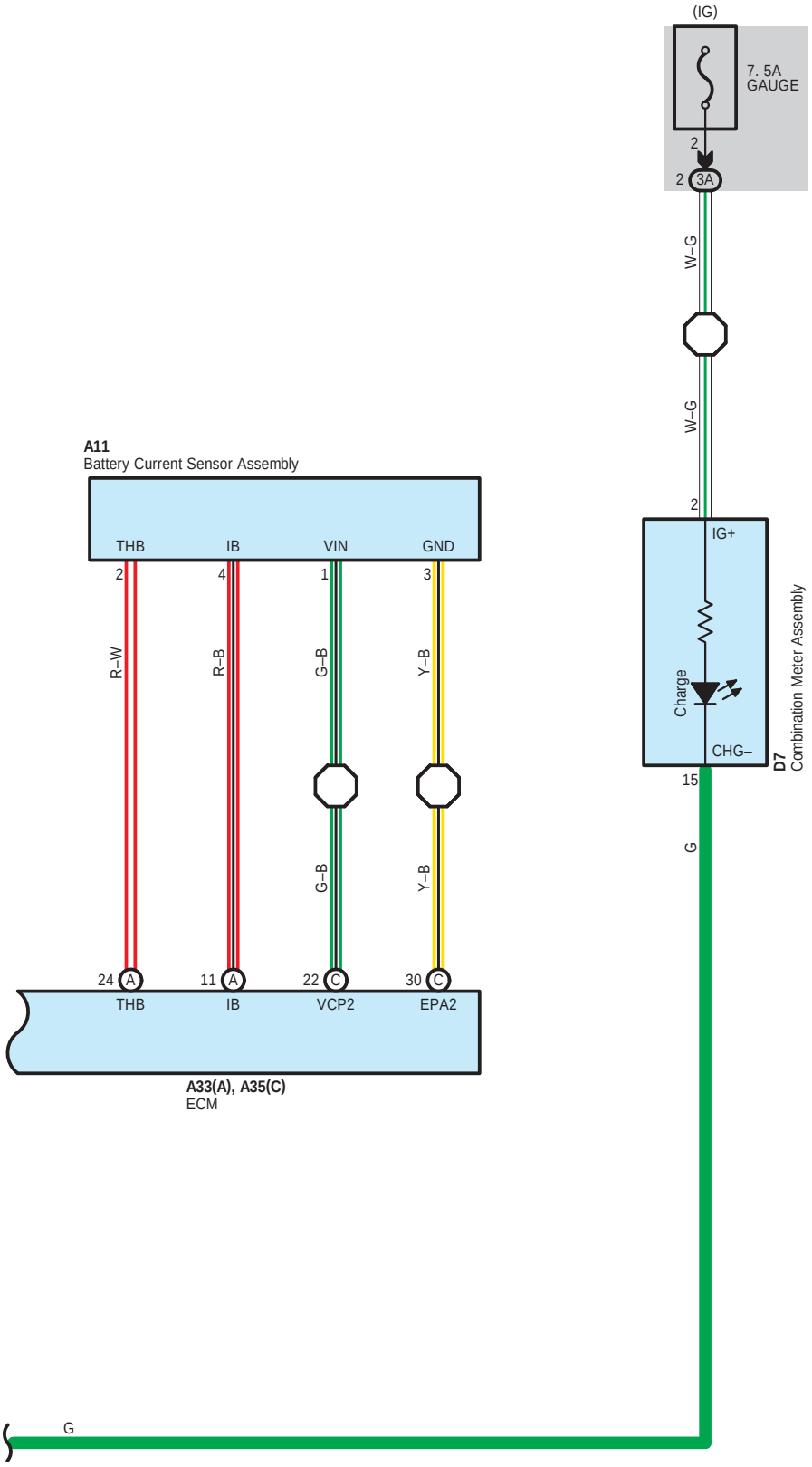
(IG)
7. 5A
GAUGE
2
2 3A
W–G
W–G
2
IG+
Charge
CHG–
D7
Combination Meter Assembly
15
G
A11
Battery Current Sensor Assembly
THB
IB
VIN
GND
2
4
1
3
R–W
R–B
G–B
Y–B
G–B
Y–B
24 A
11 A
22 C
30 C
THB
IB
VCP2
EPA2
A33(A), A35(C)
ECM
G

○ : **Parts Location**

Code		See Page	Code		See Page	Code		See Page
A11		39 (LHD)	A43	A	39 (LHD)	A77	B	39 (LHD)
		47 (RHD)			47 (RHD)			47 (RHD)
A33	A	42 (LHD)	A75	A	39 (LHD)	D7		40 (LHD)
		50 (RHD)			47 (RHD)			48 (RHD)
A35	C	42 (LHD)	A76	B	39 (LHD)			
		50 (RHD)			47 (RHD)			

▭ : **Relay Blocks**

Code	See Page	Relay Blocks (Relay Block Location)
1	24	Engine Room R/B (Engine Compartment Right)

▭ : **Junction Block and Wire Harness Connector**

Code	See Page	Junction Block and Wire Harness (Connector Location)
1A	24	Engine Room Main Wire and Engine Room J/B (Engine Compartment Right)
1C		
3A	26	Instrument Panel Wire and Instrument Panel J/B Assembly (Instrument Panel Reinforcement)

▭ : **Connector Joining Wire Harness and Wire Harness**

Code	See Page	Joining Wire Harness and Wire Harness (Connector Location)
AD1	59 (RHD)	Engine Room Main Wire and Instrument Panel Wire (Cowl Side Panel RH)
AD2	55 (LHD)	Engine Room Main Wire and Instrument Panel Wire (Instrument Panel Reinforcement)

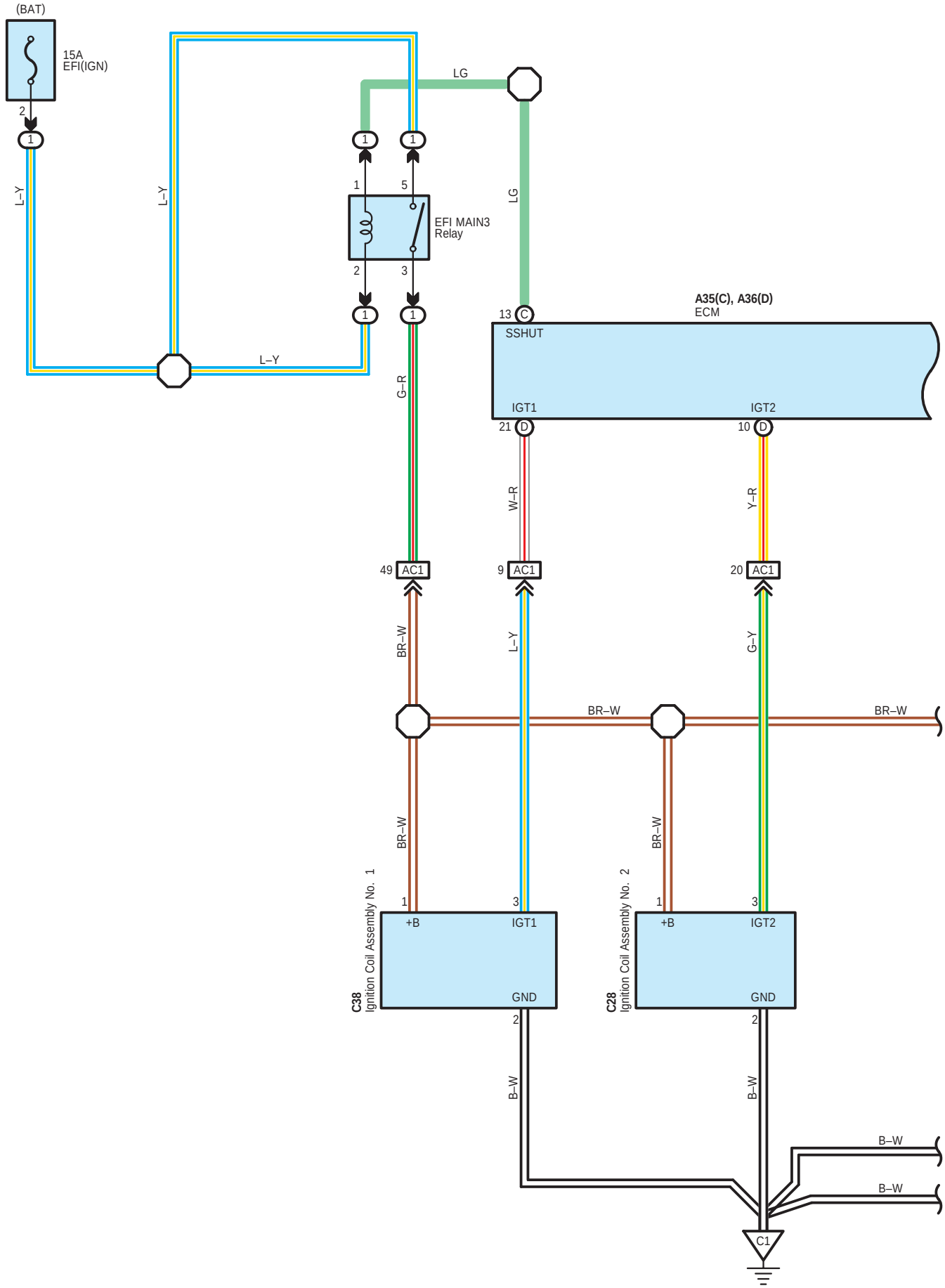
(BAT)
15A
EFI(IGN)
2
1
L–Y
L–Y
L–Y
LG
1
1
1
5
EFI MAIN3
Relay
2
3
1
1
LG
13
C
A35(C), A36(D)
ECM
SSHUT
G–R
IGT1
IGT2
21
D
10
D
W–R
Y–R
49
AC1
9
AC1
20
AC1
BR–W
L–Y
G–Y
BR–W
BR–W
BR–W
BR–W
C38
Ignition Coil Assembly No. 1
1
+B
3
IGT1
GND
2
C28
Ignition Coil Assembly No. 2
1
+B
3
IGT2
GND
2
B–W
B–W
B–W
B–W
C1

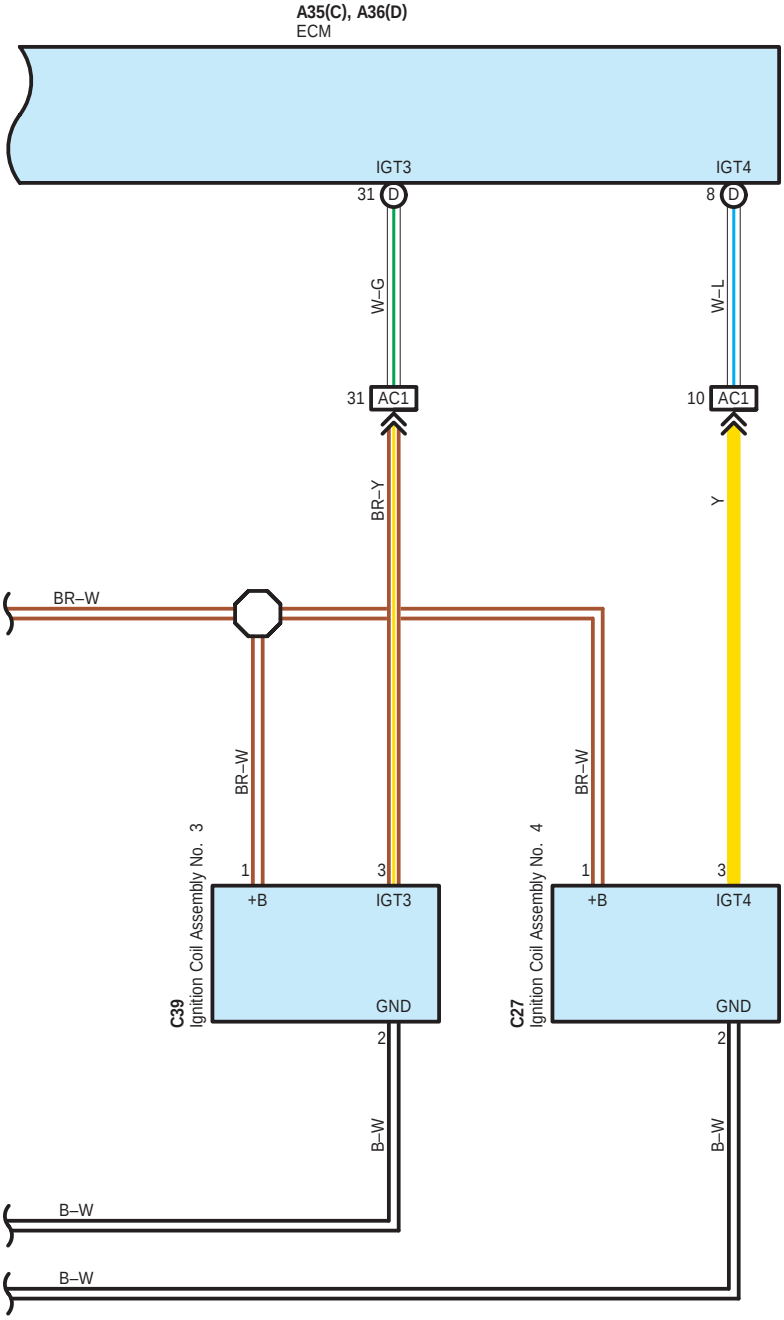
A35(C), A36(D)
ECM
IGT3
IGT4
31
D
8
D
W–G
W–L
31
AC1
10
AC1
BR–Y
Y
BR–W
BR–W
BR–W
1
3
1
3
+B
IGT3
+B
IGT4
GND
GND
C39
Ignition Coil Assembly No. 3
C27
Ignition Coil Assembly No. 4
2
2
B–W
B–W
B–W
B–W

○ : **Parts Location**

Code		See Page	Code	See Page	Code	See Page
A35	C	42 (LHD)	C27	38 (LHD)	C38	38 (LHD)
		50 (RHD)		46 (RHD)		46 (RHD)
A36	D	42 (LHD)	C28	38 (LHD)	C39	38 (LHD)
		50 (RHD)		46 (RHD)		46 (RHD)

⬭ : **Relay Blocks**

Code	See Page	Relay Blocks (Relay Block Location)
1	24	Engine Room R/B (Engine Compartment Right)

▭ : **Connector Joining Wire Harness and Wire Harness**

Code	See Page	Joining Wire Harness and Wire Harness (Connector Location)
AC1	54 (LHD)	Engine Room Main Wire and Engine Wire (Engine Unit)
	58 (RHD)	

▽ : **Ground Points**

Code	See Page	Ground Points Location
C1	54 (LHD)	Engine Unit
	58 (RHD)	

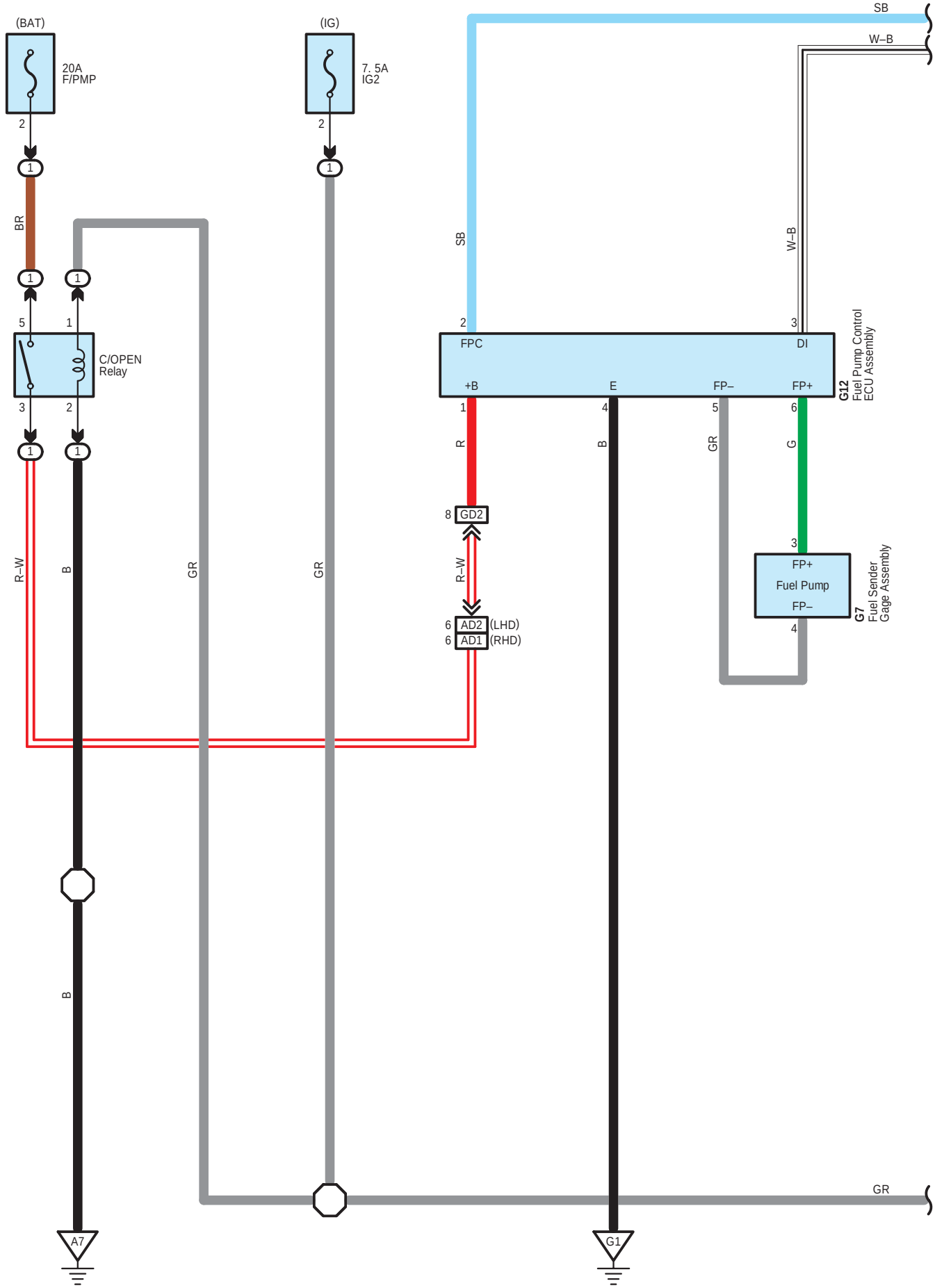
(BAT)
20A
F/PMP
(IG)
7. 5A
IG2
SB
W–B
BR
C/OPEN
Relay
FPC
DI
+B
E
FP–
FP+
G12
Fuel Pump Control
ECU Assembly
R
B
GR
G
GD2
R–W
AD2
(LHD)
AD1
(RHD)
FP+
Fuel Pump
FP–
G7
Fuel Sender
Gage Assembly
A7
G1

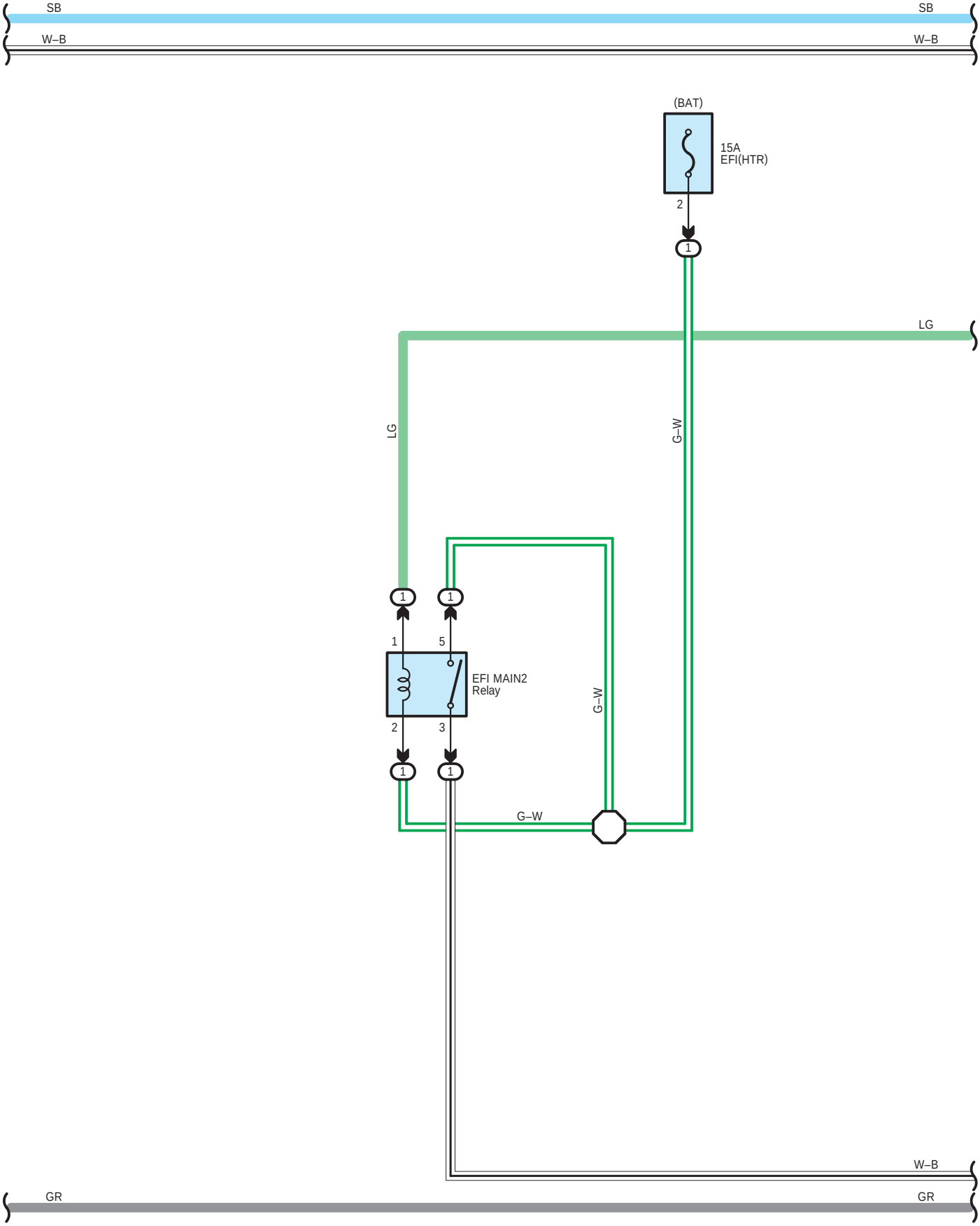
SB
SB
W–B
W–B
(BAT)
15A
EFI(HTR)
2
1
LG
LG
G–W
1
1
1
5
EFI MAIN2
Relay
G–W
2
3
1
1
G–W
W–B
GR
GR

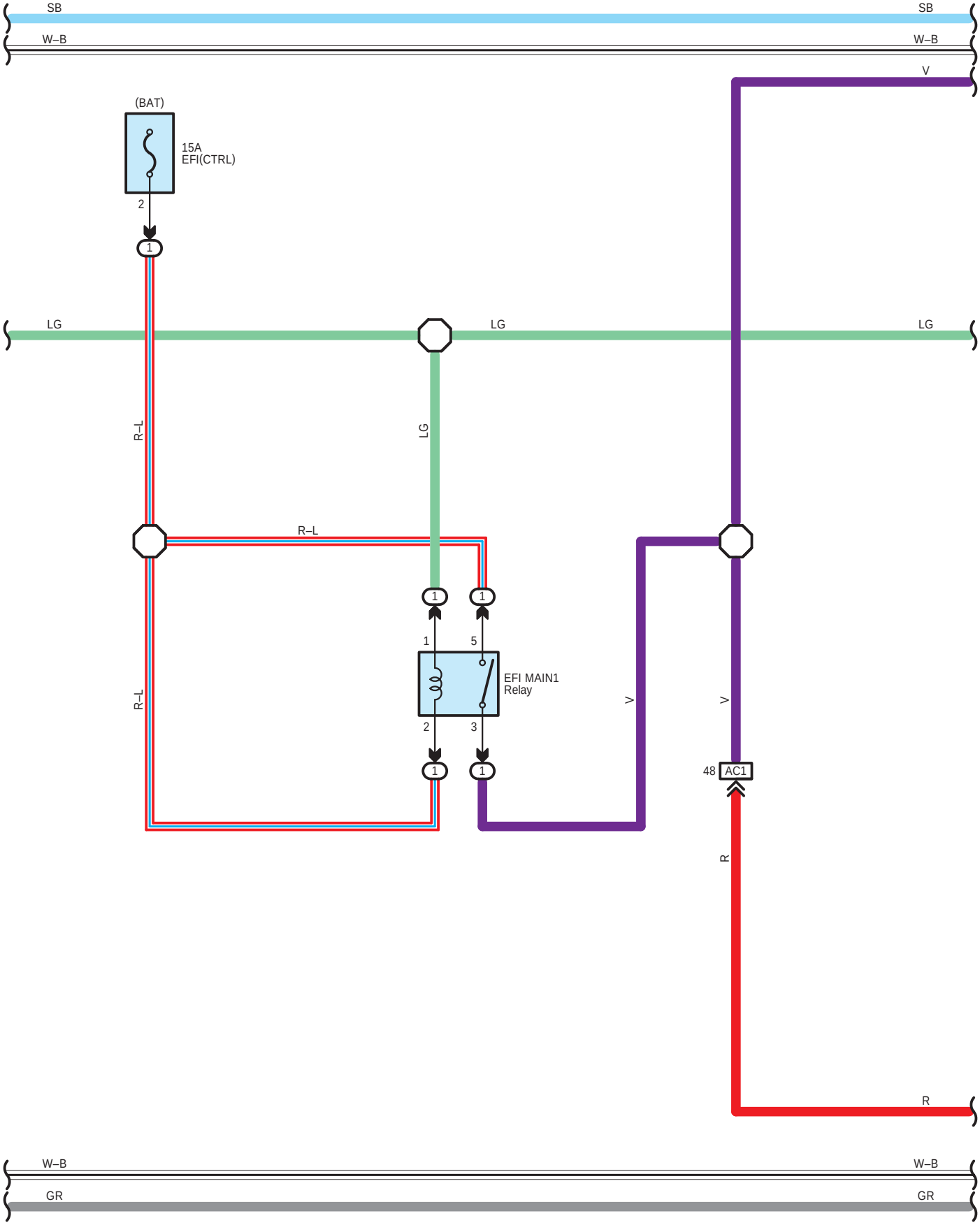
SB
SB
W–B
W–B
V
(BAT)
15A
EFI(CTRL)
2
1
LG
LG
LG
R–L
LG
R–L
1
1
1
5
EFI MAIN1
Relay
R–L
2
3
V
V
1
1
48
AC1
R
R
W–B
W–B
GR
GR

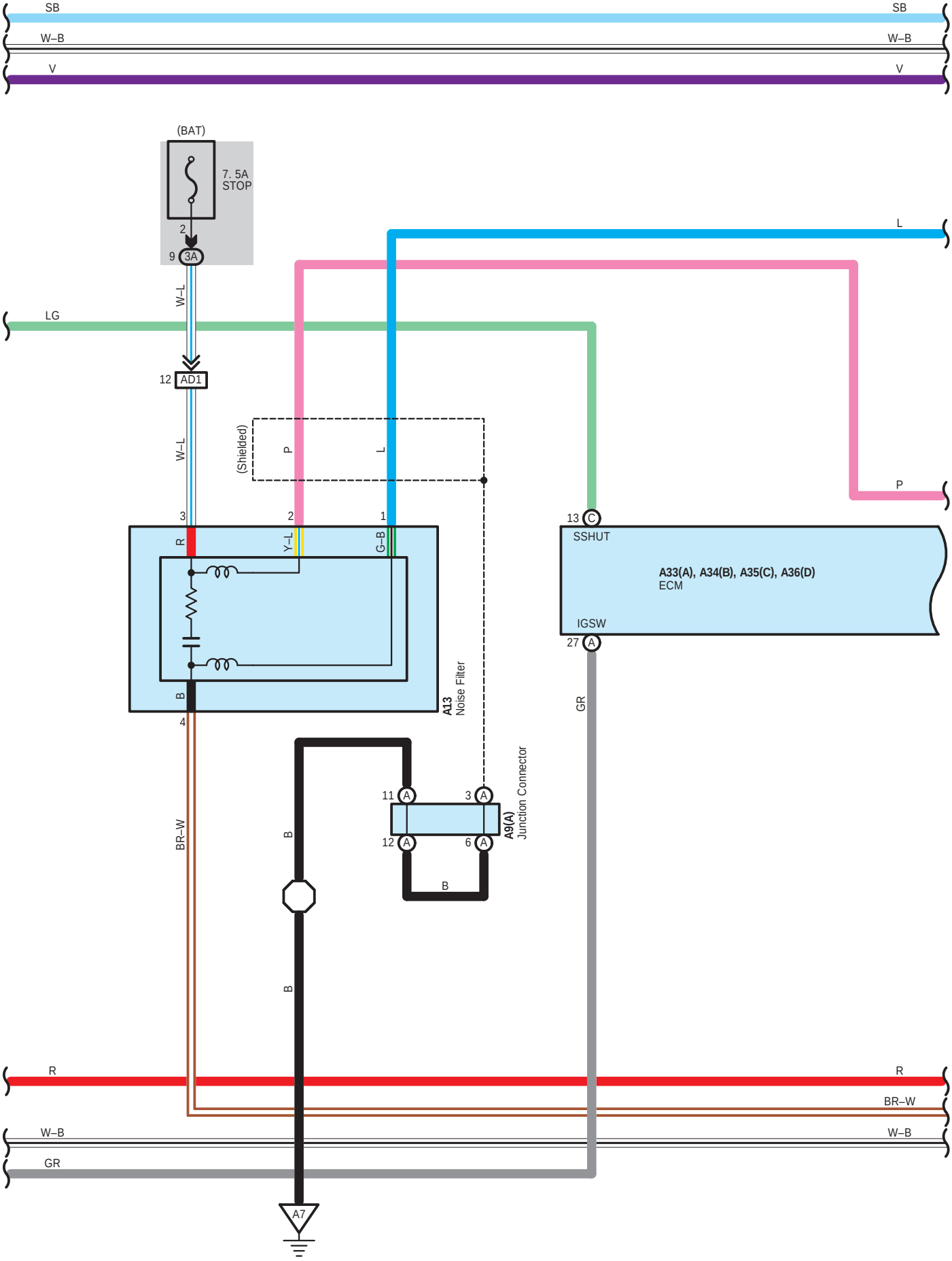
SB
W–B
V
(BAT)
7. 5A
STOP
2
9 3A
W–L
LG
12 AD1
W–L
(Shielded)
P
L
3
2
1
R
Y–L
G–B
B
4
A13
Noise Filter
13 C
SSHUT
A33(A), A34(B), A35(C), A36(D)
ECM
IGSW
27 A
GR
11 A
3 A
12 A
6 A
A9(A)
Junction Connector
B
BR–W
A7
R
W–B
GR

Cruise Control, ECT and A/T Indicator (A/T), Engine Control, Shift Indicator (M/T) and Shift Lock

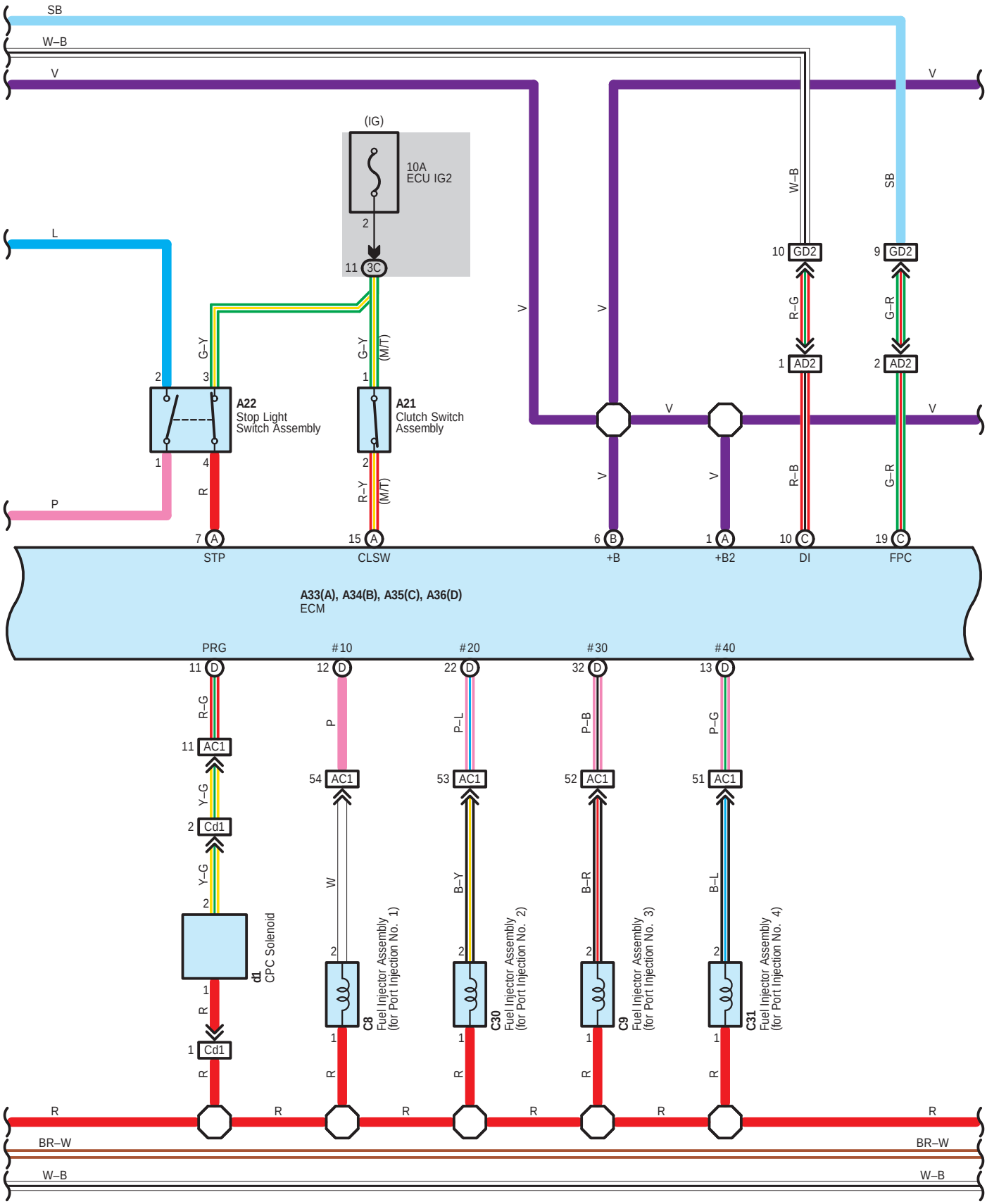

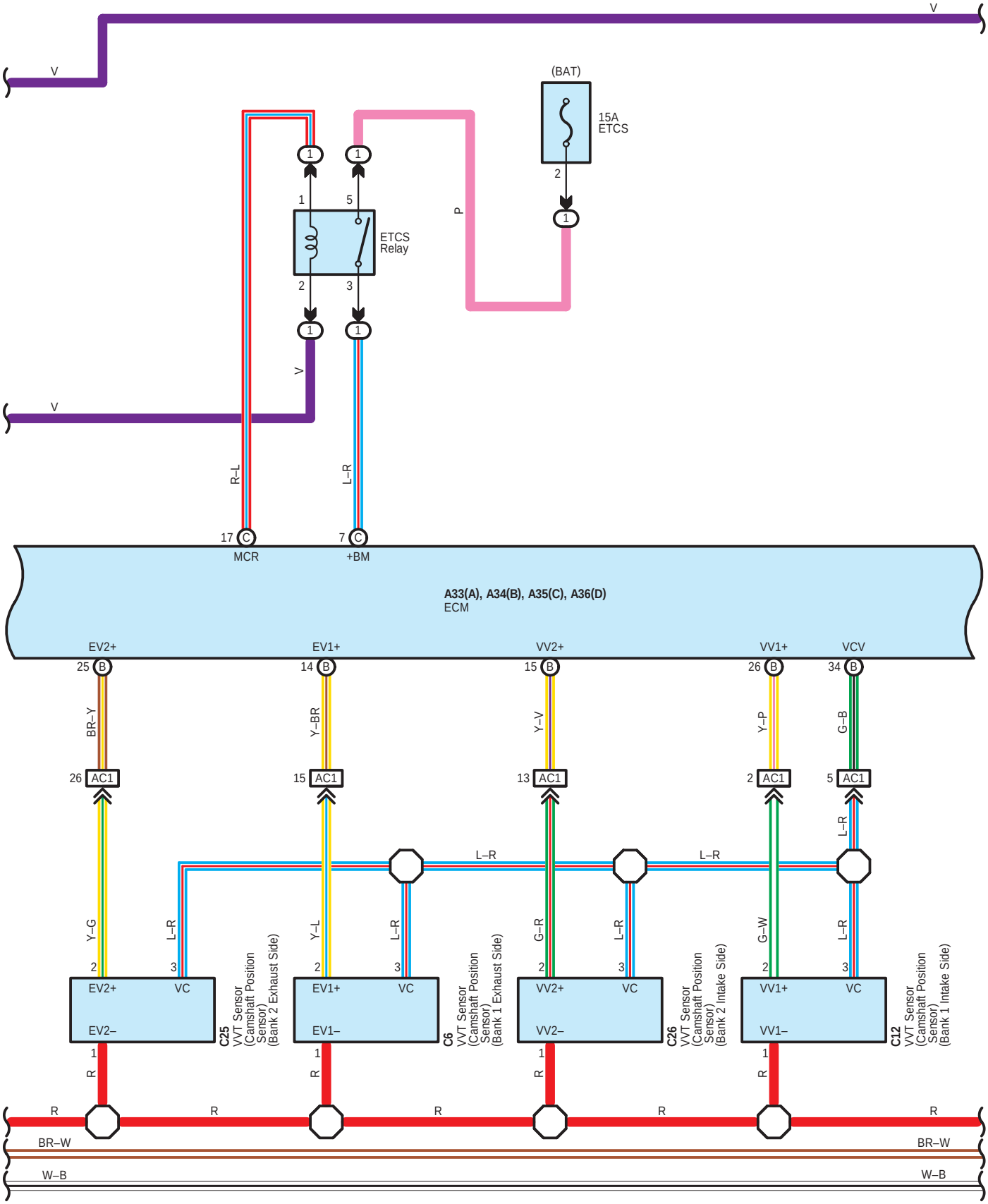
V
V
(BAT)
15A
ETCS
2
1
1
5
1
ETCS
Relay
2
3
P
1
1
1
1
V
V
R–L
L–R
17 C
MCR
7 C
+BM
A33(A), A34(B), A35(C), A36(D)
ECM
EV2+
EV1+
VV2+
VV1+
VCV
25 B
14 B
15 B
26 B
34 B
BR–Y
Y–BR
Y–V
Y–P
G–B
26 AC1
15 AC1
13 AC1
2 AC1
5 AC1
L–R
L–R
L–R
Y–G
L–R
Y–L
L–R
G–R
L–R
G–W
L–R
2
3
2
3
2
3
2
3
EV2+
VC
EV2–
C25
VVT Sensor
(Camshaft Position
Sensor)
(Bank 2 Exhaust Side)
EV1+
VC
EV1–
C6
VVT Sensor
(Camshaft Position
Sensor)
(Bank 1 Exhaust Side)
VV2+
VC
VV2–
C26
VVT Sensor
(Camshaft Position
Sensor)
(Bank 2 Intake Side)
VV1+
VC
VV1–
C12
VVT Sensor
(Camshaft Position
Sensor)
(Bank 1 Intake Side)
1
1
1
1
R
R
R
R
R
R
R
R
BR–W
BR–W
W–B
W–B

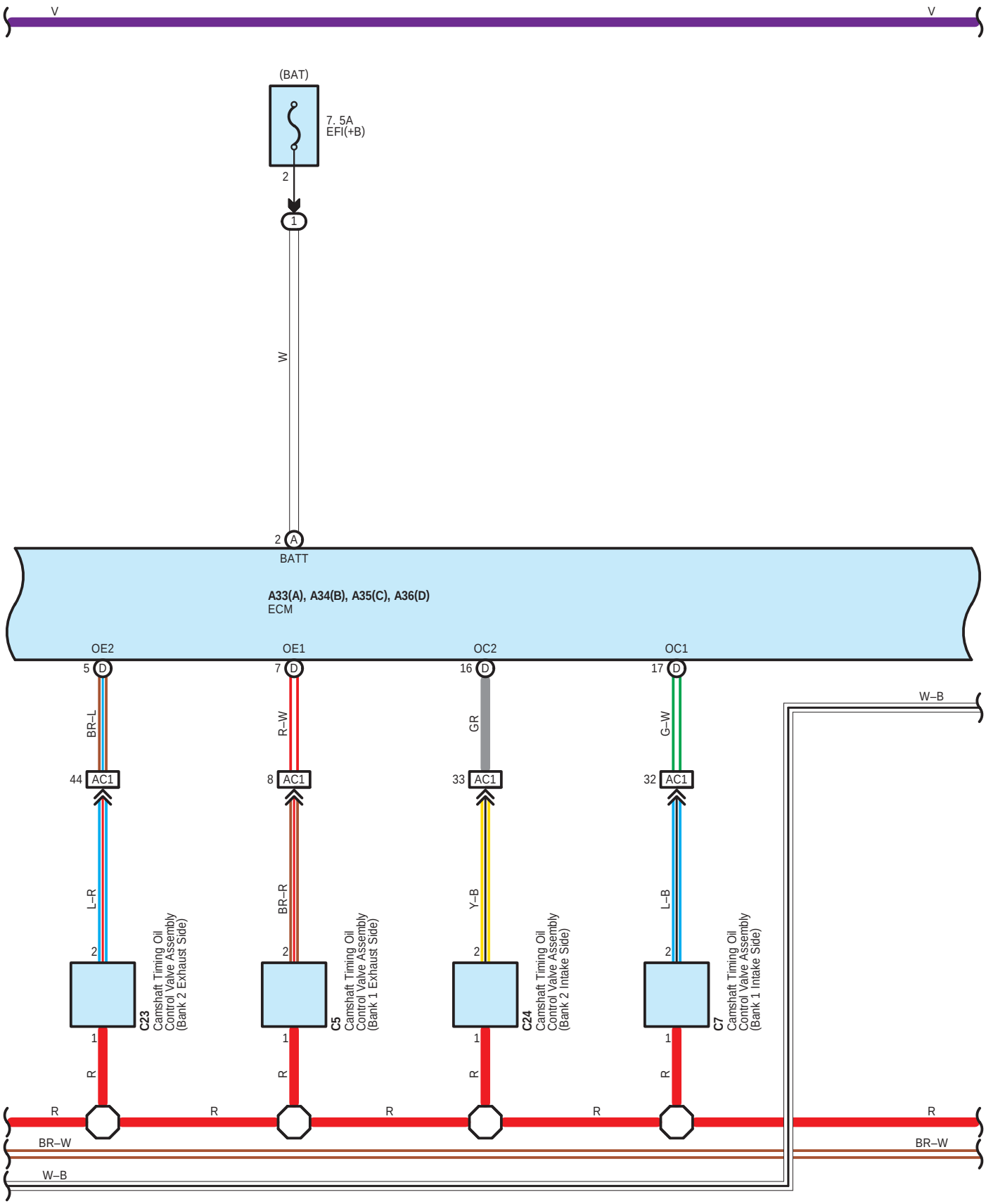
V
V
(BAT)
7. 5A
EFI(+B)
2
1
W
2 A
BATT
A33(A), A34(B), A35(C), A36(D)
ECM
OE2
OE1
OC2
OC1
5 D
7 D
16 D
17 D
BR–L
R–W
GR
G–W
W–B
44 AC1
8 AC1
33 AC1
32 AC1
L–R
BR–R
Y–B
L–B
2
C23
Camshaft Timing Oil Control Valve Assembly (Bank 2 Exhaust Side)
C5
Camshaft Timing Oil Control Valve Assembly (Bank 1 Exhaust Side)
C24
Camshaft Timing Oil Control Valve Assembly (Bank 2 Intake Side)
C7
Camshaft Timing Oil Control Valve Assembly (Bank 1 Intake Side)
1
R
BR–W
W–B

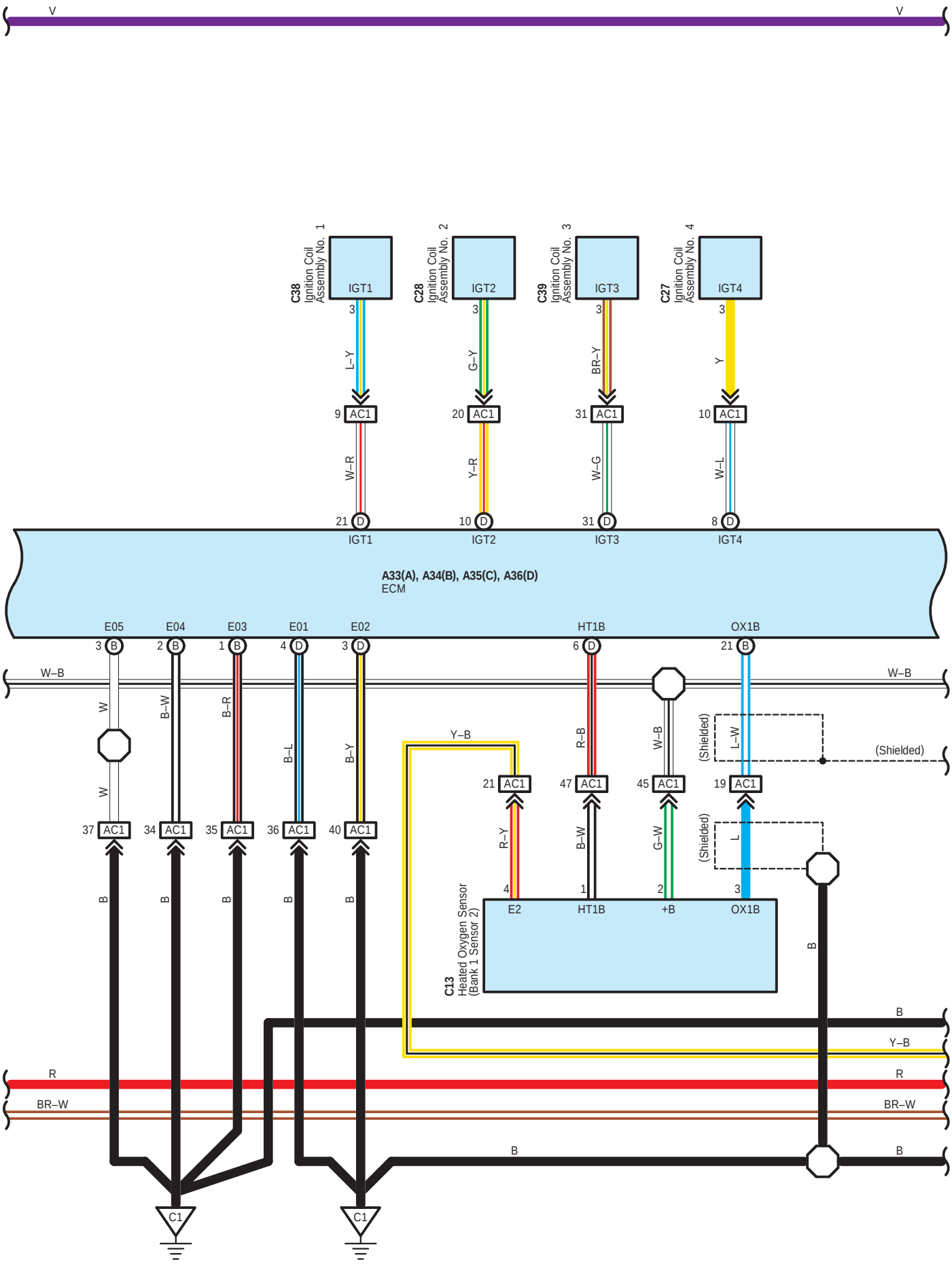
V
V
C38
Ignition Coil Assembly No. 1
IGT1
C28
Ignition Coil Assembly No. 2
IGT2
C39
Ignition Coil Assembly No. 3
IGT3
C27
Ignition Coil Assembly No. 4
IGT4
L–Y
G–Y
BR–Y
Y
AC1
W–R
Y–R
W–G
W–L
IGT1
IGT2
IGT3
IGT4
A33(A), A34(B), A35(C), A36(D)
ECM
E05
E04
E03
E01
E02
HT1B
OX1B
W–B
W–B
W
B–W
B–R
B–L
B–Y
R–B
W–B
L–W
(Shielded)
(Shielded)
Y–B
R–Y
B–W
G–W
L
(Shielded)
E2
HT1B
+B
OX1B
C13
Heated Oxygen Sensor (Bank 1 Sensor 2)
B
Y–B
R
BR–W
C1
C1

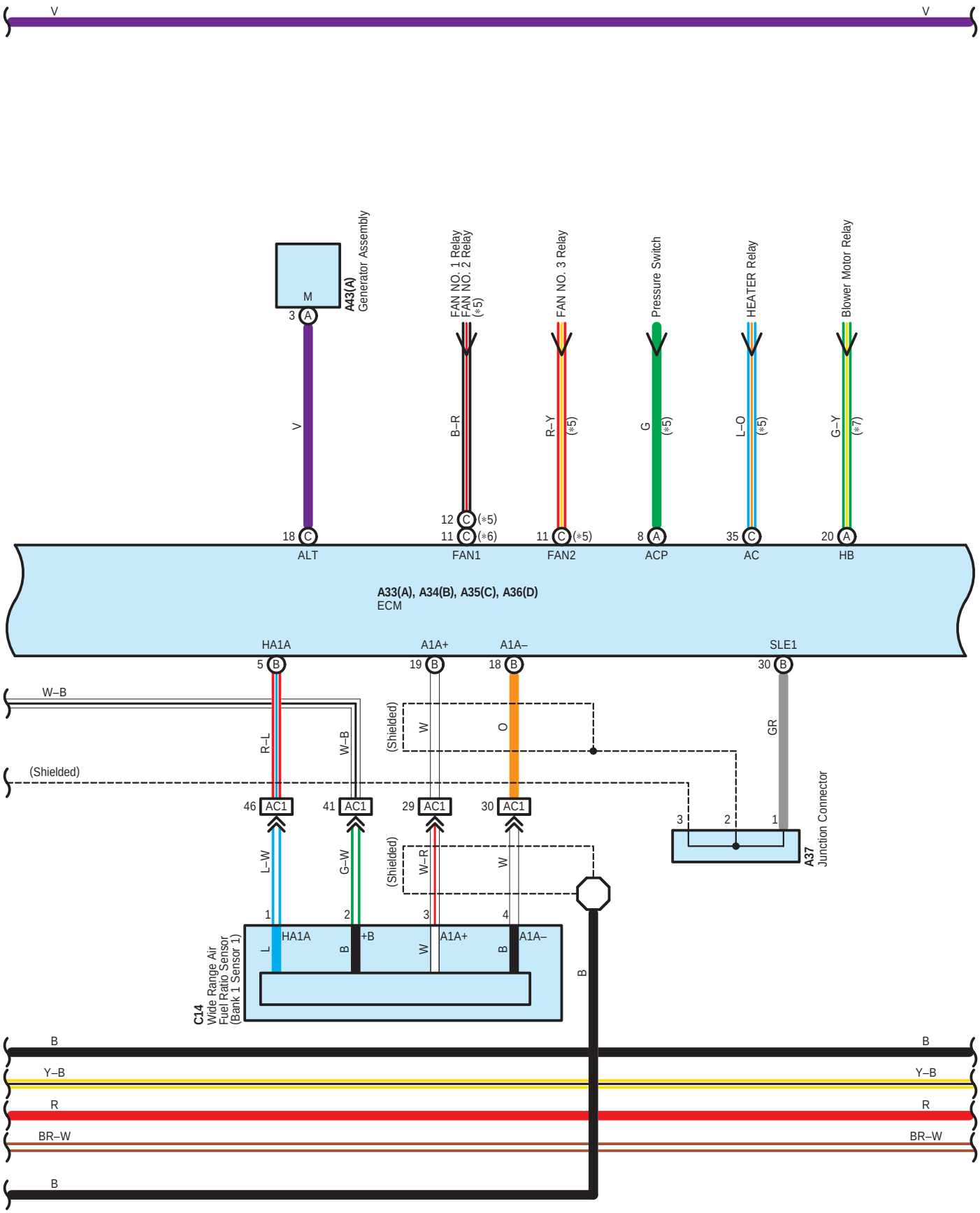
V
V
A43(A)
Generator Assembly
M
3 A
V
18 C
ALT
FAN NO. 1 Relay
FAN NO. 2 Relay
(*5)
B–R
12 C (*5)
11 C (*6)
FAN1
FAN NO. 3 Relay
R–Y
(*5)
11 C (*5)
FAN2
Pressure Switch
G
(*5)
8 A
ACP
HEATER Relay
L–O
(*5)
35 C
AC
Blower Motor Relay
G–Y
(*7)
20 A
HB
A33(A), A34(B), A35(C), A36(D)
ECM
HA1A
5 B
A1A+
19 B
A1A–
18 B
SLE1
30 B
W–B
R–L
W–B
(Shielded)
W
O
GR
(Shielded)
46 AC1
41 AC1
29 AC1
30 AC1
3
2
1
A37
Junction Connector
L–W
G–W
(Shielded)
W–R
W
1
2
3
4
HA1A
+B
A1A+
A1A–
L
B
W
B
C14
Wide Range Air
Fuel Ratio Sensor
(Bank 1 Sensor 1)
B
B
Y–B
Y–B
R
R
BR–W
BR–W
B

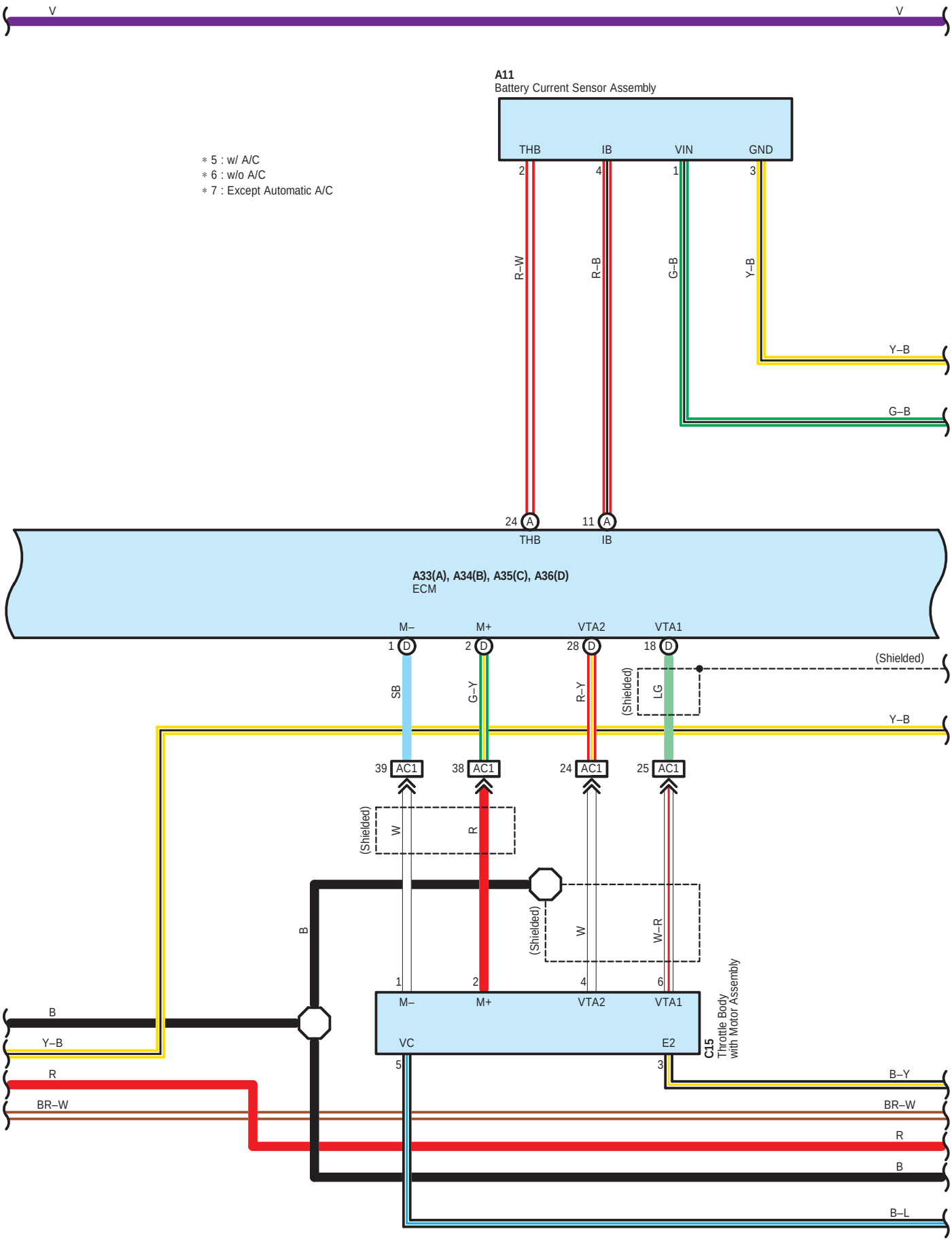
V
V
A11
Battery Current Sensor Assembly
THB
IB
VIN
GND
2
4
1
3
R–W
R–B
G–B
Y–B
Y–B
G–B
24
A
THB
11
A
IB
∗ 5 : w/ A/C
∗ 6 : w/o A/C
∗ 7 : Except Automatic A/C
A33(A), A34(B), A35(C), A36(D)
ECM
M–
M+
VTA2
VTA1
1
D
2
D
28
D
18
D
SB
G–Y
R–Y
(Shielded)
LG
(Shielded)
Y–B
39
AC1
38
AC1
24
AC1
25
AC1
(Shielded)
W
R
(Shielded)
W
W–R
B
1
2
4
6
M–
M+
VTA2
VTA1
VC
E2
5
3
C15
Throttle Body
with Motor Assembly
B
Y–B
R
BR–W
B–Y
BR–W
R
B
B–L

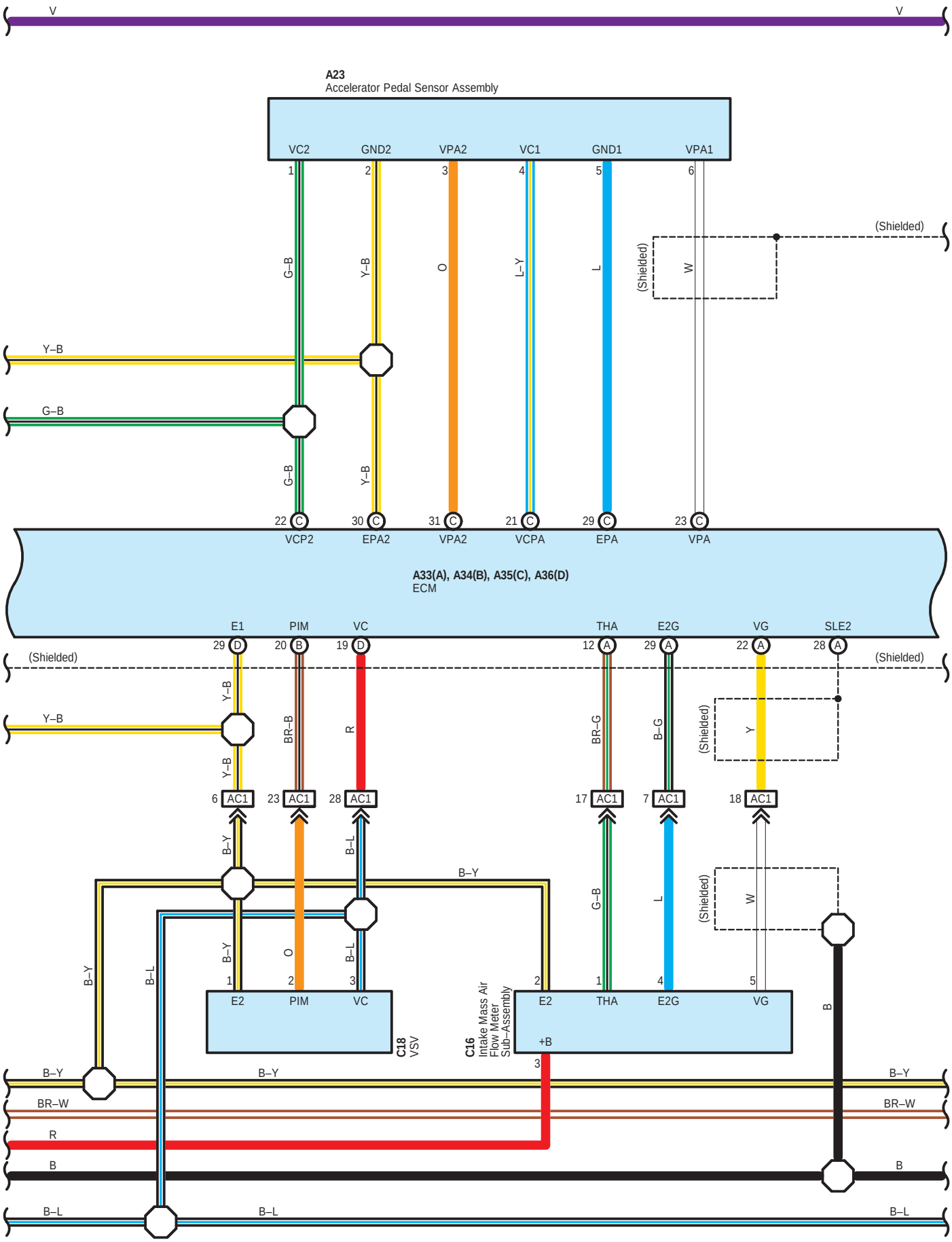
V
V
A23
Accelerator Pedal Sensor Assembly
VC2
GND2
VPA2
VC1
GND1
VPA1
1
2
3
4
5
6
G–B
Y–B
O
L–Y
L
W
(Shielded)
(Shielded)
Y–B
G–B
G–B
Y–B
22
30
31
21
29
23
VCP2
EPA2
VPA2
VCPA
EPA
VPA
A33(A), A34(B), A35(C), A36(D)
ECM
E1
PIM
VC
THA
E2G
VG
SLE2
29
20
19
12
29
22
28
(Shielded)
(Shielded)
Y–B
Y–B
Y–B
BR–B
R
BR–G
B–G
Y
(Shielded)
6
23
28
17
7
18
AC1
B–Y
B–L
B–Y
G–B
L
W
(Shielded)
B–Y
B–L
B–Y
O
B–L
1
2
3
2
1
4
5
E2
PIM
VC
C18
VSV
C16
Intake Mass Air Flow Meter Sub–Assembly
E2
THA
E2G
VG
+B
3
B
B–Y
B–Y
B–Y
BR–W
BR–W
R
B
B
B–L
B–L
B–L

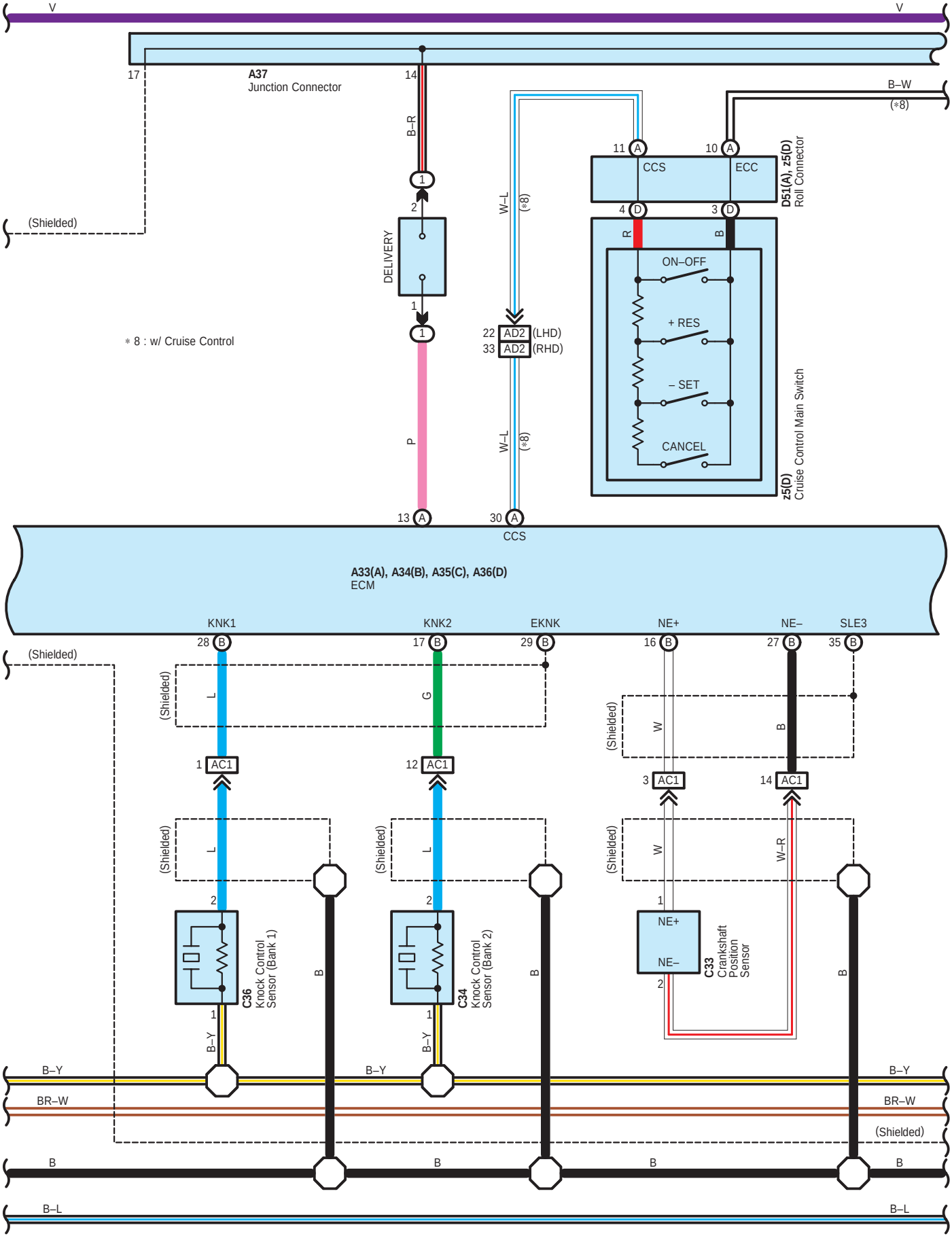
V
V
17
A37
Junction Connector
14
B–R
(Shielded)
DELIVERY
P
13 A
30 A
CCS
W–L
(*8)
22 AD2 (LHD)
33 AD2 (RHD)
W–L
(*8)
B–W
(*8)
11 A
10 A
CCS
ECC
D51(A), z5(D)
Roll Connector
4 D
3 D
R
B
ON–OFF
+ RES
– SET
CANCEL
z5(D)
Cruise Control Main Switch
* 8 : w/ Cruise Control
A33(A), A34(B), A35(C), A36(D)
ECM
KNK1
KNK2
EKNK
NE+
NE–
SLE3
28 B
17 B
29 B
16 B
27 B
35 B
(Shielded)
L
G
W
B
1 AC1
12 AC1
3 AC1
14 AC1
W–R
2
1
NE+
NE–
C36
Knock Control
Sensor (Bank 1)
C34
Knock Control
Sensor (Bank 2)
C33
Crankshaft
Position
Sensor
B–Y
BR–W
B
B–L

Cruise Control, ECT and A/T Indicator (A/T), Engine Control, Shift Indicator (M/T) and Shift Lock

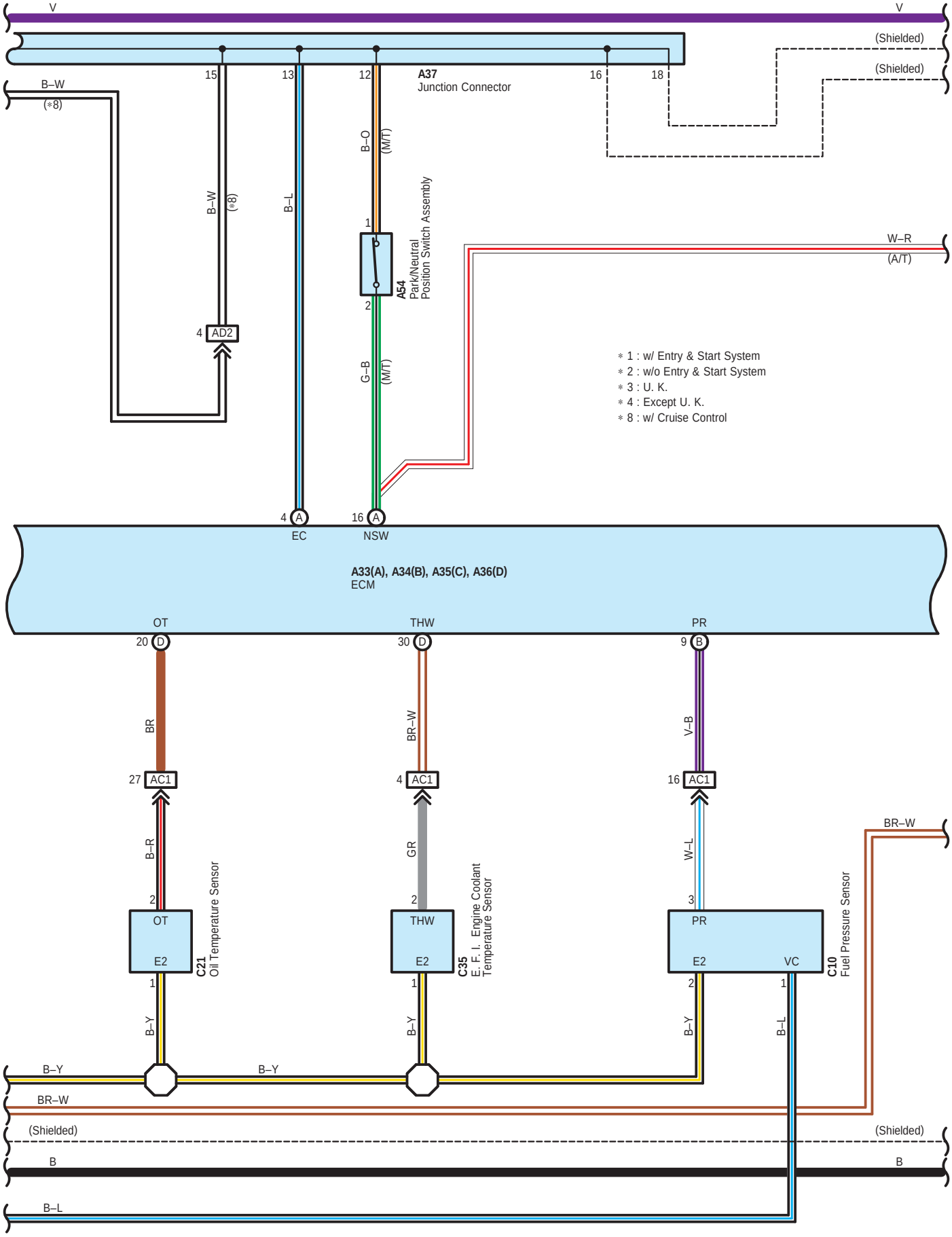

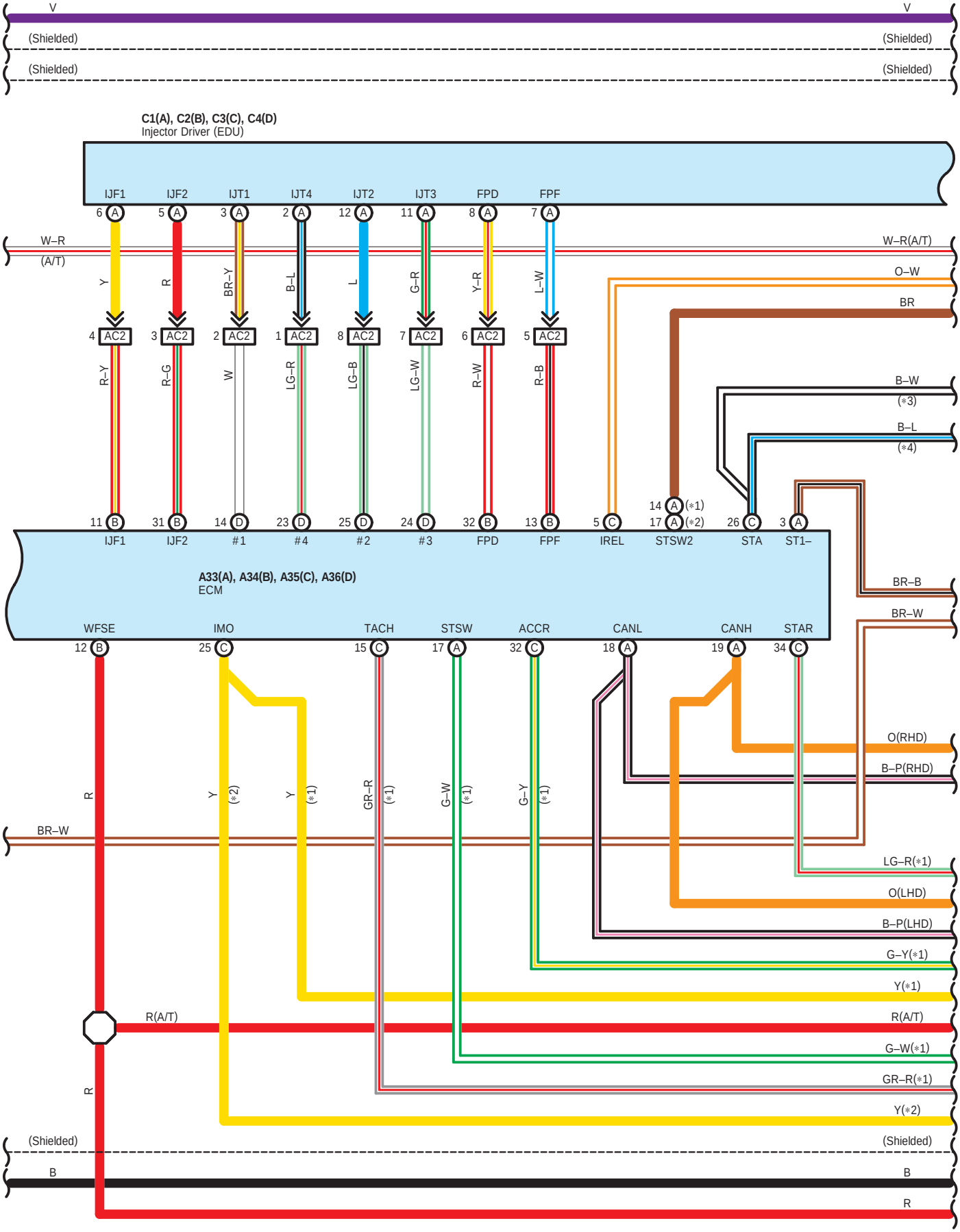
V
(Shielded)
(Shielded)
C1(A), C2(B), C3(C), C4(D)
Injector Driver (EDU)
IJF1
IJF2
IJT1
IJT4
IJT2
IJT3
FPD
FPF
W–R
(A/T)
W–R(A/T)
O–W
BR
B–W
(*3)
B–L
(*4)
AC2
IREL
STSW2
STA
ST1–
A33(A), A34(B), A35(C), A36(D)
ECM
WFSE
IMO
TACH
STSW
ACCR
CANL
CANH
STAR
BR–B
BR–W
O(RHD)
B–P(RHD)
LG–R(*1)
O(LHD)
B–P(LHD)
G–Y(*1)
Y(*1)
R(A/T)
G–W(*1)
GR–R(*1)
Y(*2)
(Shielded)
B
R

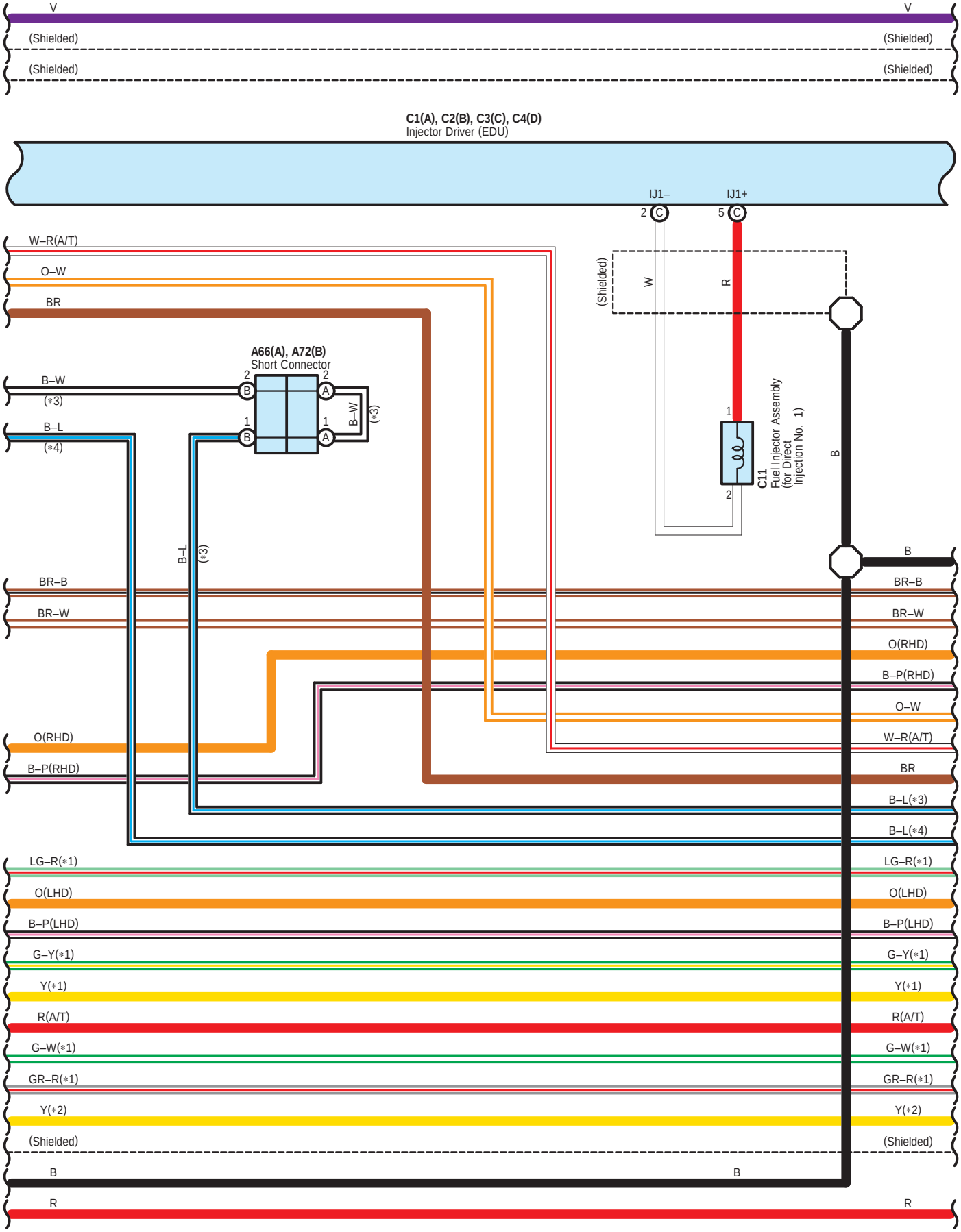
V
(Shielded)
(Shielded)
C1(A), C2(B), C3(C), C4(D)
Injector Driver (EDU)
IJ1–
IJ1+
2
5
W–R(A/T)
O–W
BR
(Shielded)
W
R
A66(A), A72(B)
Short Connector
B–W
(*3)
B–L
(*4)
C11
Fuel Injector Assembly
(for Direct
Injection No. 1)
B
BR–B
BR–W
O(RHD)
B–P(RHD)
O–W
W–R(A/T)
BR
B–L(*3)
B–L(*4)
LG–R(*1)
O(LHD)
B–P(LHD)
G–Y(*1)
Y(*1)
R(A/T)
G–W(*1)
GR–R(*1)
Y(*2)
(Shielded)
B
R

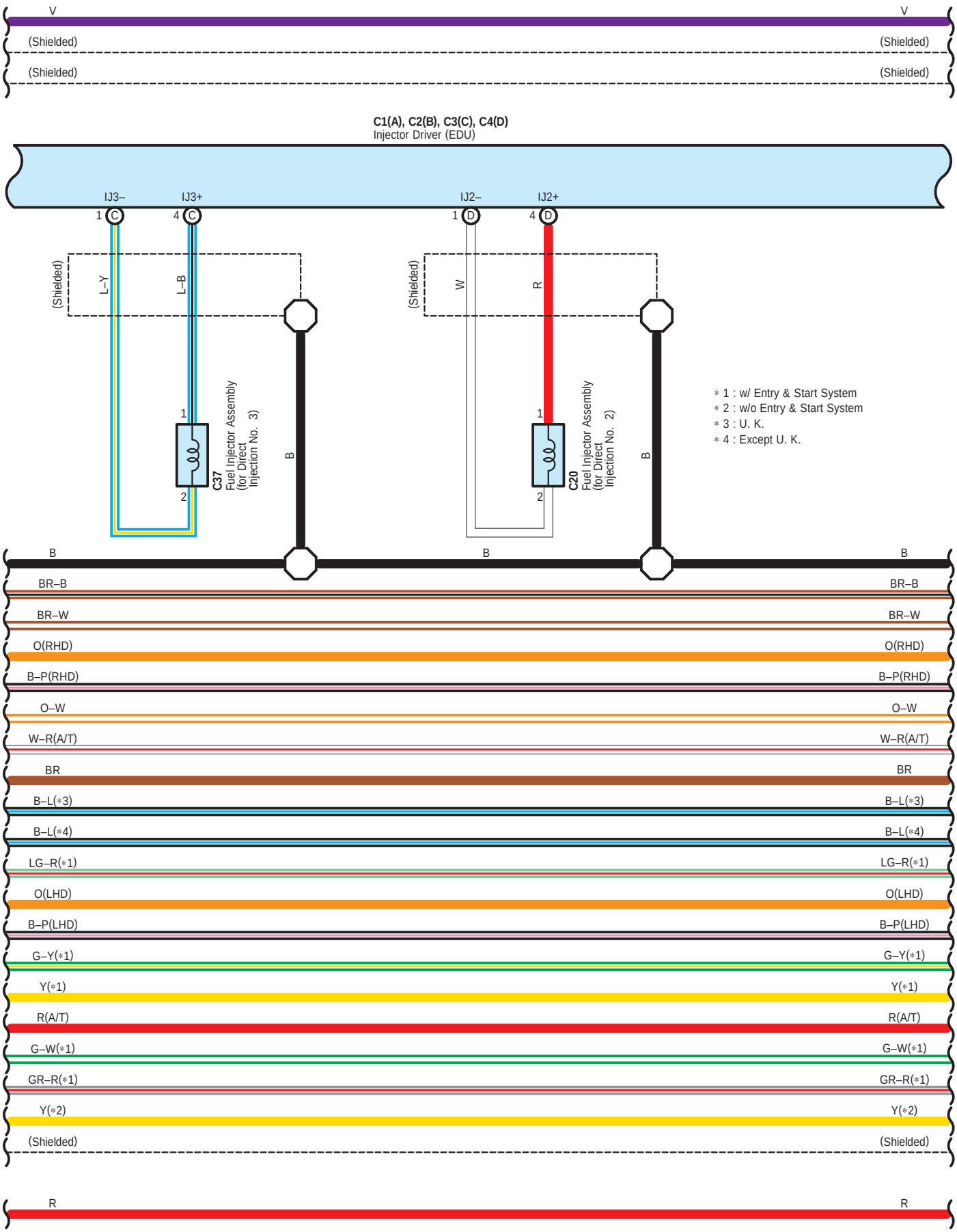
V
V
(Shielded)
(Shielded)
(Shielded)
(Shielded)
C1(A), C2(B), C3(C), C4(D)
Injector Driver (EDU)
IJ3–
IJ3+
IJ2–
IJ2+
1 C
4 C
1 D
4 D
(Shielded)
L–Y
L–B
(Shielded)
W
R
1
2
C37
Fuel Injector Assembly
(for Direct
Injection No. 3)
B
1
2
C20
Fuel Injector Assembly
(for Direct
Injection No. 2)
B
∗ 1 : w/ Entry & Start System
∗ 2 : w/o Entry & Start System
∗ 3 : U. K.
∗ 4 : Except U. K.
B
B
B
BR–B
BR–W
O(RHD)
B–P(RHD)
O–W
W–R(A/T)
BR
B–L(∗3)
B–L(∗4)
LG–R(∗1)
O(LHD)
B–P(LHD)
G–Y(∗1)
Y(∗1)
R(A/T)
G–W(∗1)
GR–R(∗1)
Y(∗2)
(Shielded)
R
R

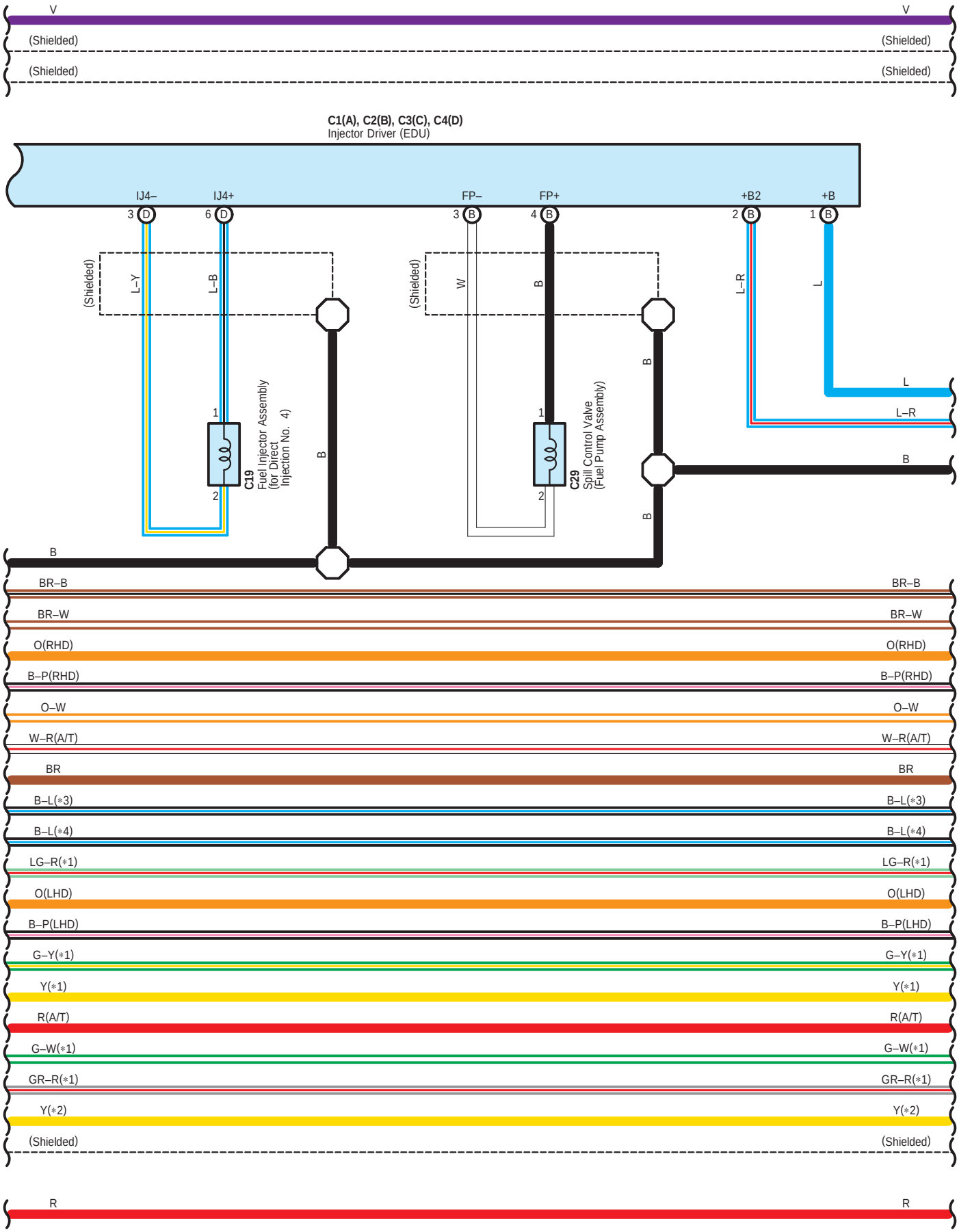
V
(Shielded)
(Shielded)
C1(A), C2(B), C3(C), C4(D)
Injector Driver (EDU)
IJ4–
IJ4+
FP–
FP+
+B2
+B
3 D
6 D
3 B
4 B
2 B
1 B
(Shielded)
L–Y
L–B
W
B
L–R
L
1
2
C19
Fuel Injector Assembly
(for Direct
Injection No. 4)
C29
Spill Control Valve
(Fuel Pump Assembly)
BR–B
BR–W
O(RHD)
B–P(RHD)
O–W
W–R(A/T)
BR
B–L(∗3)
B–L(∗4)
LG–R(∗1)
O(LHD)
B–P(LHD)
G–Y(∗1)
Y(∗1)
R(A/T)
G–W(∗1)
GR–R(∗1)
Y(∗2)
(Shielded)
R

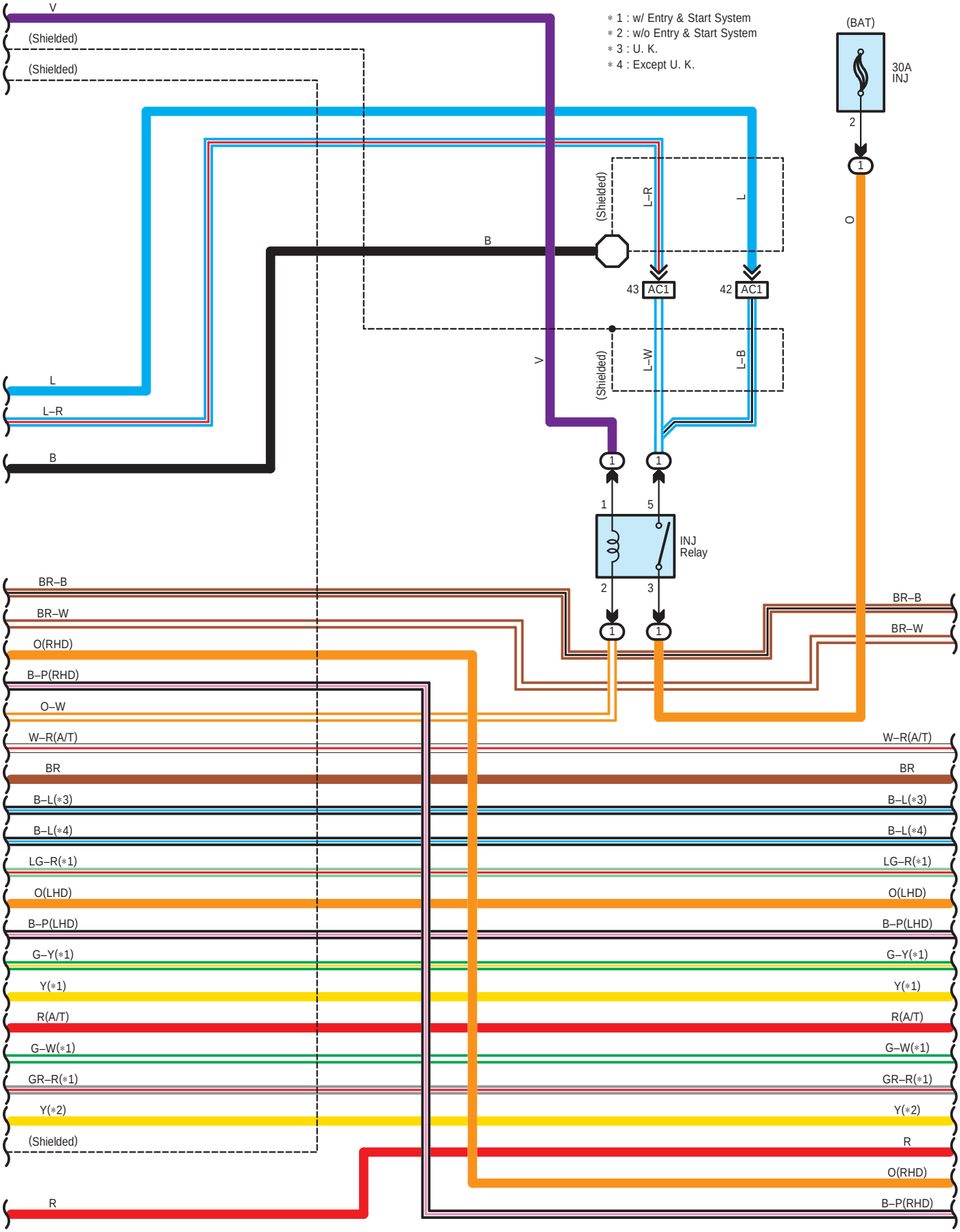
V
(Shielded)
(Shielded)
L
L–R
B
∗ 1 : w/ Entry & Start System
∗ 2 : w/o Entry & Start System
∗ 3 : U. K.
∗ 4 : Except U. K.
(BAT)
30A
INJ
2
1
O
(Shielded)
L–R
L
B
43
AC1
42
AC1
V
(Shielded)
L–W
L–B
1
1
1
5
INJ
Relay
2
3
1
1
BR–B
BR–W
O(RHD)
B–P(RHD)
O–W
W–R(A/T)
BR
B–L(∗3)
B–L(∗4)
LG–R(∗1)
O(LHD)
B–P(LHD)
G–Y(∗1)
Y(∗1)
R(A/T)
G–W(∗1)
GR–R(∗1)
Y(∗2)
(Shielded)
R
BR–B
BR–W
W–R(A/T)
BR
B–L(∗3)
B–L(∗4)
LG–R(∗1)
O(LHD)
B–P(LHD)
G–Y(∗1)
Y(∗1)
R(A/T)
G–W(∗1)
GR–R(∗1)
Y(∗2)
R
O(RHD)
B–P(RHD)

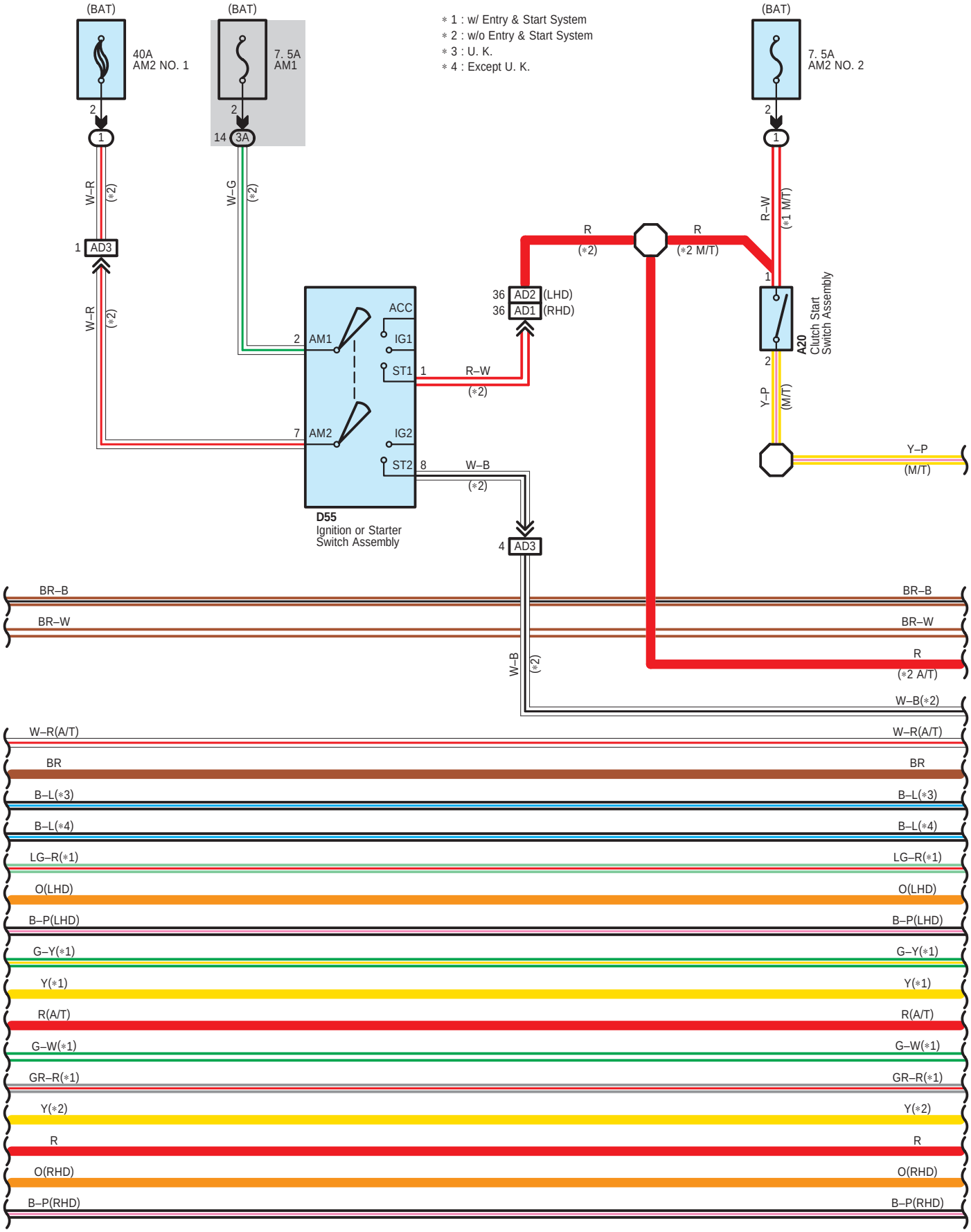
(BAT)
40A
AM2 NO. 1
(BAT)
7. 5A
AM1
∗ 1 : w/ Entry & Start System
∗ 2 : w/o Entry & Start System
∗ 3 : U. K.
∗ 4 : Except U. K.
(BAT)
7. 5A
AM2 NO. 2
W–R
(∗2)
W–G
(∗2)
R–W
(∗1 M/T)
AD3
R
(∗2)
R
(∗2 M/T)
AD2 (LHD)
AD1 (RHD)
ACC
AM1
IG1
ST1
R–W
(∗2)
AM2
IG2
ST2
W–B
(∗2)
D55
Ignition or Starter
Switch Assembly
A20
Clutch Start
Switch Assembly
Y–P
(M/T)
BR–B
BR–W
R
(∗2 A/T)
W–B(∗2)
W–R(A/T)
BR
B–L(∗3)
B–L(∗4)
LG–R(∗1)
O(LHD)
B–P(LHD)
G–Y(∗1)
Y(∗1)
R(A/T)
G–W(∗1)
GR–R(∗1)
Y(∗2)
R
O(RHD)
B–P(RHD)

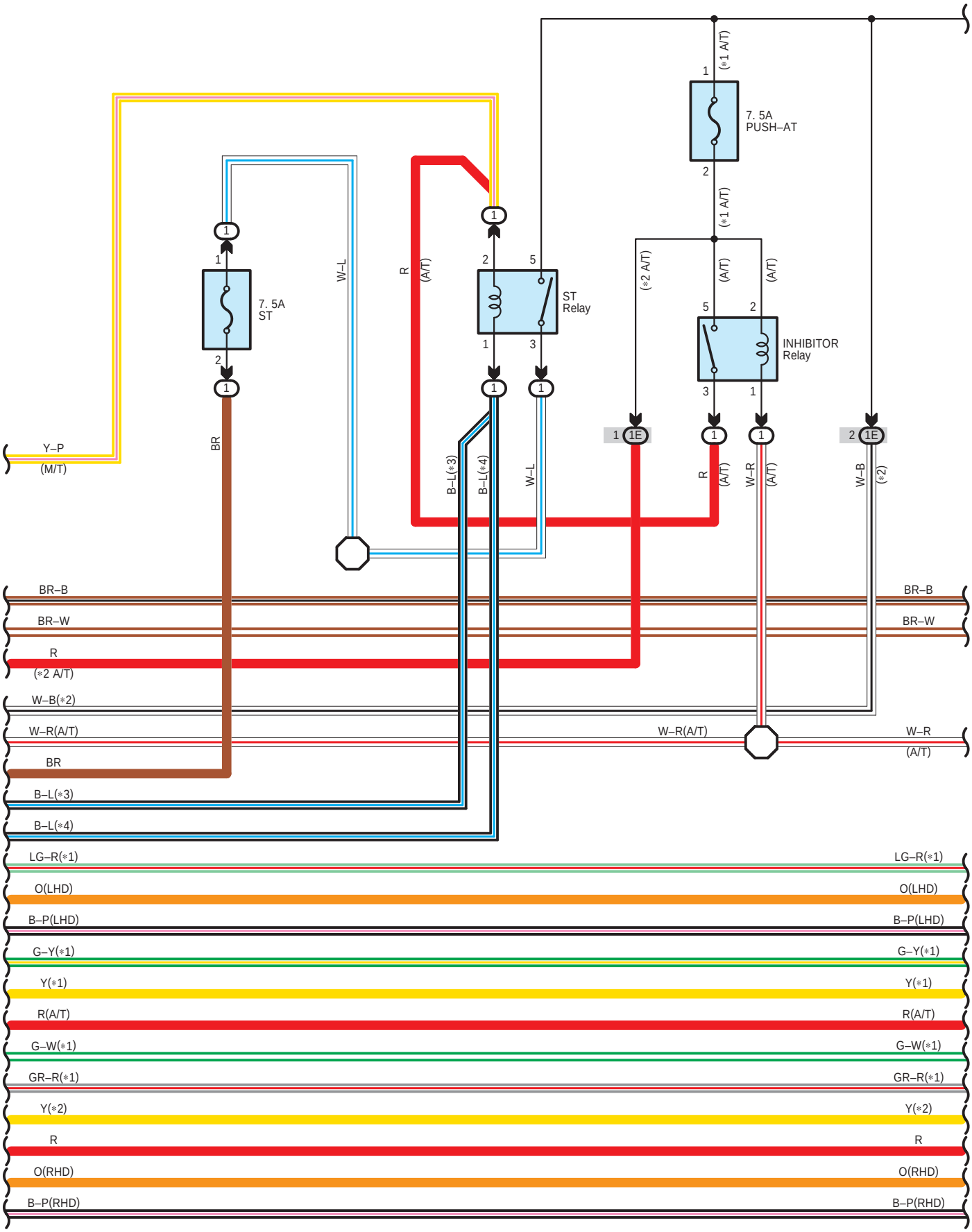
7. 5A
PUSH–AT
(*1 A/T)
7. 5A
ST
ST
Relay
INHIBITOR
Relay
(*2 A/T)
(A/T)
W–L
R
BR
B–L(*3)
B–L(*4)
Y–P
(M/T)
1E
W–R
W–B
(*2)
BR–B
BR–W
R
(*2 A/T)
W–B(*2)
W–R(A/T)
W–R
(A/T)
BR
B–L(*3)
B–L(*4)
LG–R(*1)
O(LHD)
B–P(LHD)
G–Y(*1)
Y(*1)
R(A/T)
G–W(*1)
GR–R(*1)
Y(*2)
R
O(RHD)
B–P(RHD)

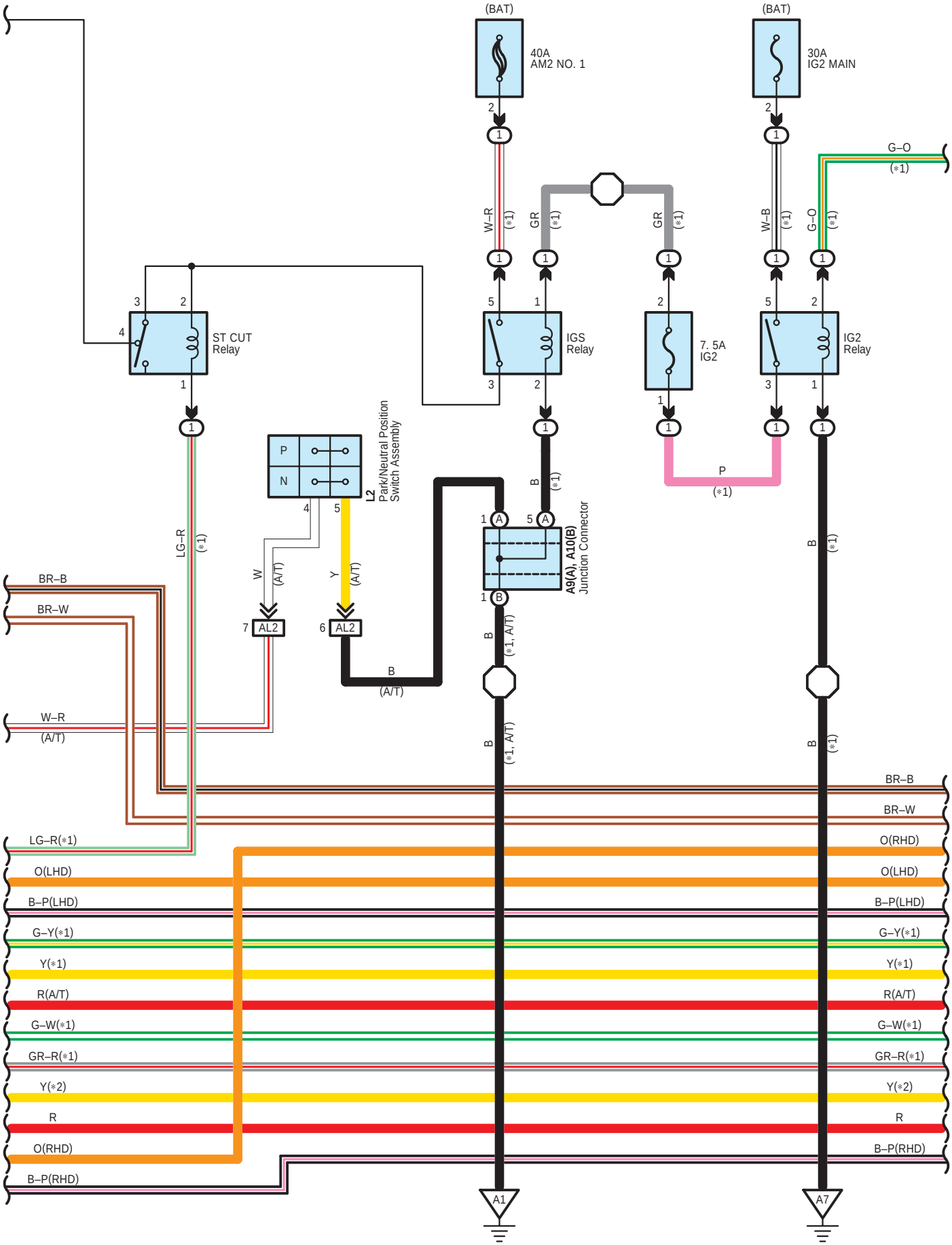
(BAT)
40A
AM2 NO. 1
(BAT)
30A
IG2 MAIN
G–O
(*1)
W–R
(*1)
GR
(*1)
GR
(*1)
W–B
(*1)
G–O
(*1)
ST CUT
Relay
IGS
Relay
7. 5A
IG2
IG2
Relay
P
N
L2
Park/Neutral Position
Switch Assembly
P
(*1)
B
(*1)
A9(A), A10(B)
Junction Connector
LG–R
(*1)
W
(A/T)
Y
(A/T)
AL2
AL2
B
(A/T)
B
(*1, A/T)
B
(*1, A/T)
B
(*1)
BR–B
BR–W
W–R
(A/T)
LG–R(*1)
O(LHD)
B–P(LHD)
G–Y(*1)
Y(*1)
R(A/T)
G–W(*1)
GR–R(*1)
Y(*2)
R
O(RHD)
B–P(RHD)
BR–B
BR–W
O(RHD)
O(LHD)
B–P(LHD)
G–Y(*1)
Y(*1)
R(A/T)
G–W(*1)
GR–R(*1)
Y(*2)
R
B–P(RHD)
A1
A7

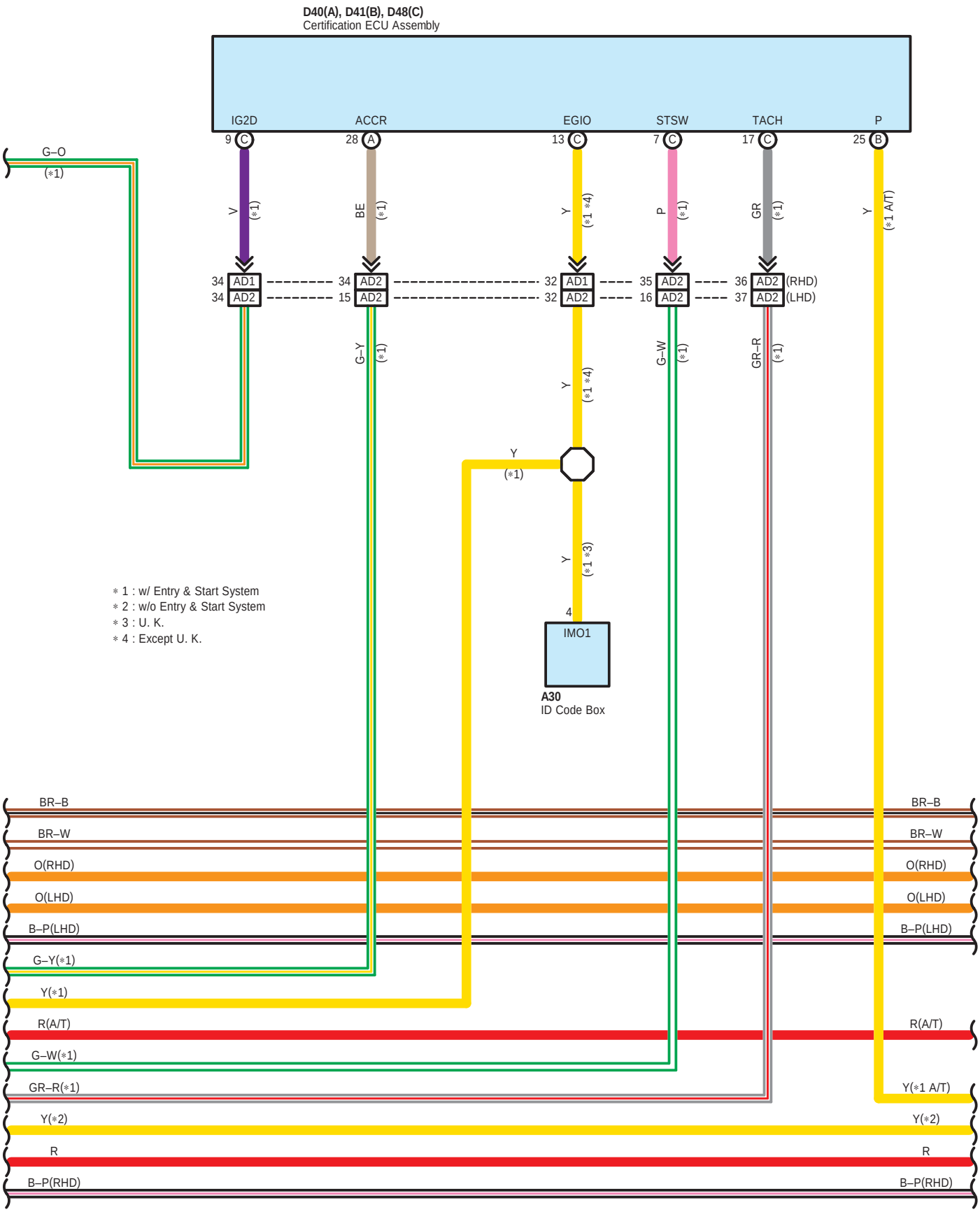
D40(A), D41(B), D48(C)
Certification ECU Assembly
IG2D
ACCR
EGIO
STSW
TACH
P
9 C
28 A
13 C
7 C
17 C
25 B
G–O
(*1)
V
(*1)
BE
(*1)
Y
(*1 *4)
P
(*1)
GR
(*1)
Y
(*1 A/T)
34 AD1
34 AD2
34 AD2
15 AD2
32 AD1
32 AD2
35 AD2
16 AD2
36 AD2 (RHD)
37 AD2 (LHD)
G–Y
(*1)
Y
(*1 *4)
G–W
(*1)
GR–R
(*1)
Y
(*1)
Y
(*1 *3)
4
IMO1
A30
ID Code Box
* 1 : w/ Entry & Start System
* 2 : w/o Entry & Start System
* 3 : U. K.
* 4 : Except U. K.
BR–B
BR–W
O(RHD)
O(LHD)
B–P(LHD)
G–Y(*1)
Y(*1)
R(A/T)
G–W(*1)
GR–R(*1)
Y(*2)
R
B–P(RHD)
BR–B
BR–W
O(RHD)
O(LHD)
B–P(LHD)
R(A/T)
Y(*1 A/T)
Y(*2)
R
B–P(RHD)

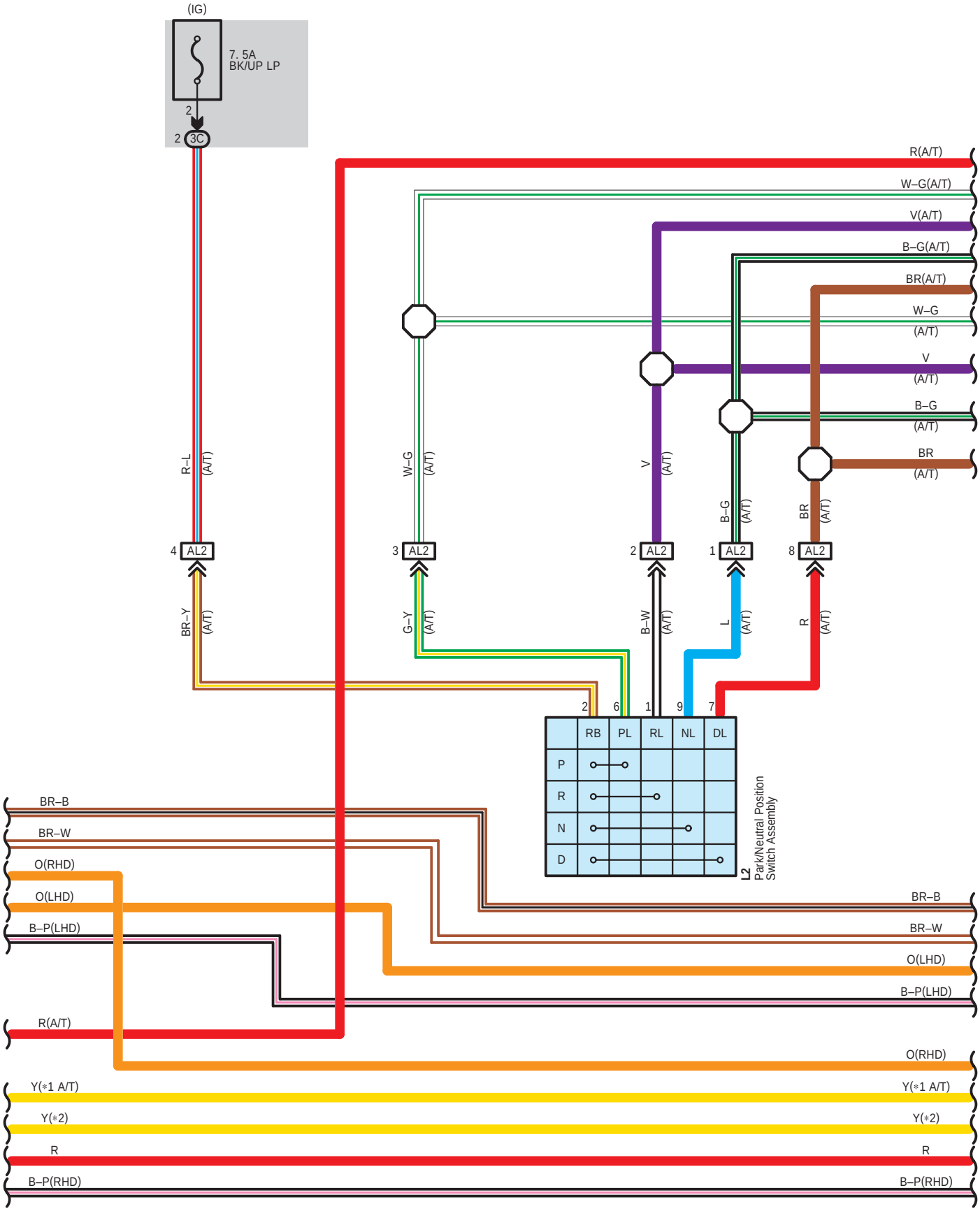
(IG)
7. 5A
BK/UP LP
2
2 3C
R(A/T)
W–G(A/T)
V(A/T)
B–G(A/T)
BR(A/T)
W–G (A/T)
V (A/T)
B–G (A/T)
BR (A/T)
R–L (A/T)
W–G (A/T)
V (A/T)
B–G (A/T)
BR (A/T)
4 AL2
3 AL2
2 AL2
1 AL2
8 AL2
BR–Y (A/T)
G–Y (A/T)
B–W (A/T)
L (A/T)
R (A/T)
2 6 1 9 7
RB PL RL NL DL
P
R
N
D
L2
Park/Neutral Position Switch Assembly
BR–B
BR–W
O(RHD)
O(LHD)
B–P(LHD)
R(A/T)
Y(*1 A/T)
Y(*2)
R
B–P(RHD)

∗ 1 : w/ Entry & Start System
∗ 2 : w/o Entry & Start System

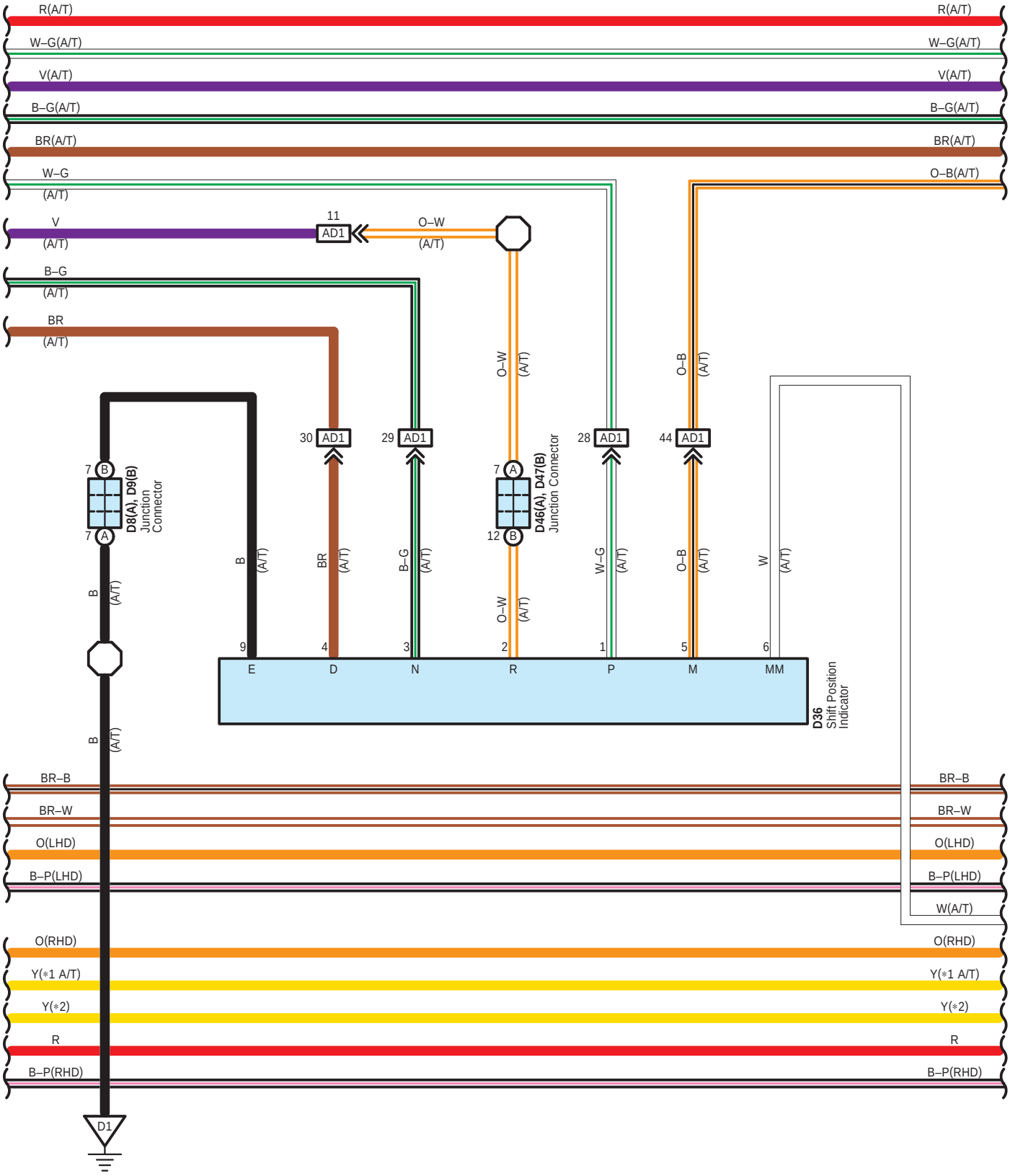

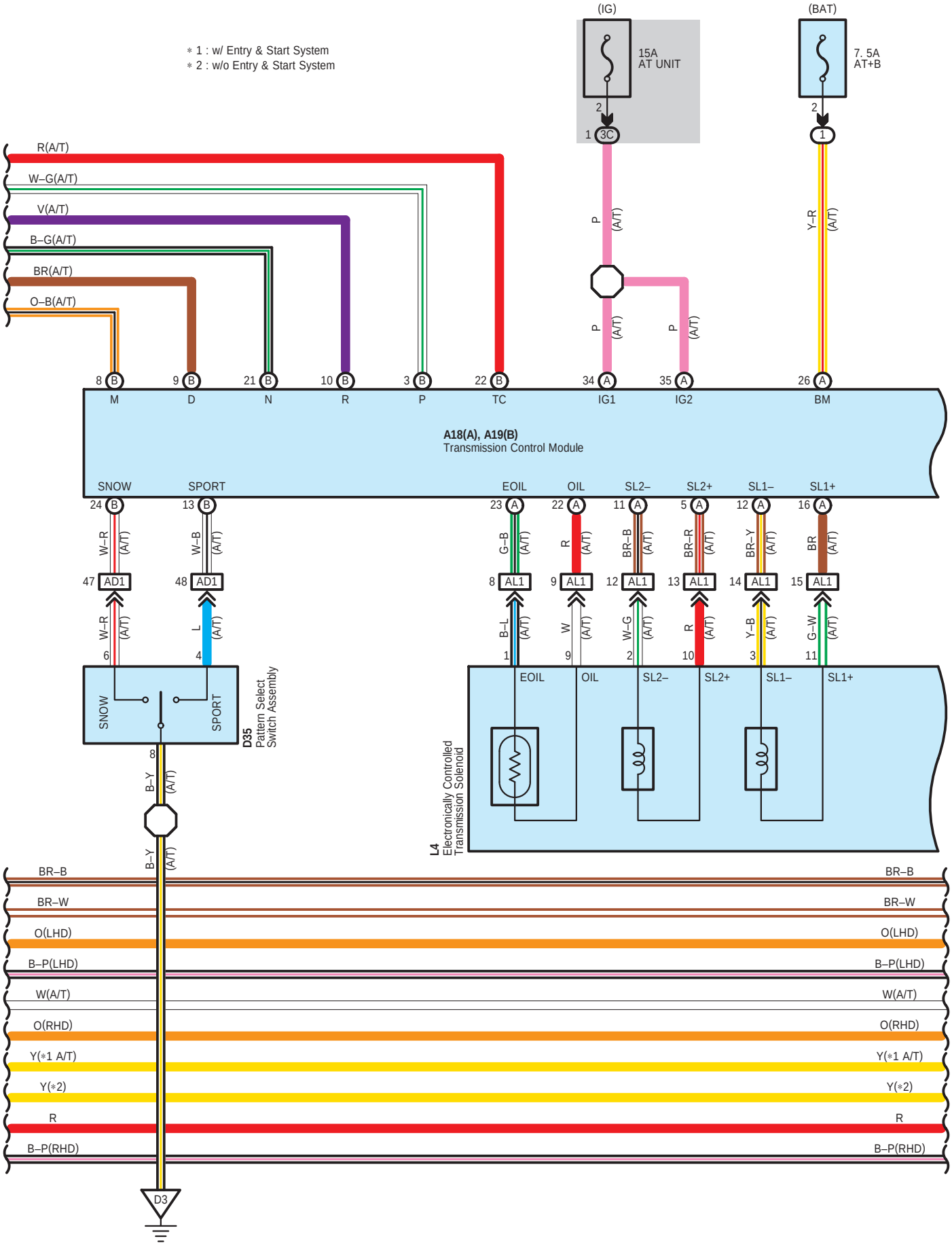
∗ 1 : w/ Entry & Start System
∗ 2 : w/o Entry & Start System
(IG)
15A
AT UNIT
(BAT)
7. 5A
AT+B
R(A/T)
W–G(A/T)
V(A/T)
B–G(A/T)
BR(A/T)
O–B(A/T)
M
D
N
R
P
TC
IG1
IG2
BM
A18(A), A19(B)
Transmission Control Module
SNOW
SPORT
EOIL
OIL
SL2–
SL2+
SL1–
SL1+
AD1
AL1
D35
Pattern Select
Switch Assembly
L4
Electronically Controlled
Transmission Solenoid
BR–B
BR–W
O(LHD)
B–P(LHD)
W(A/T)
O(RHD)
Y(∗1 A/T)
Y(∗2)
R
B–P(RHD)
D3

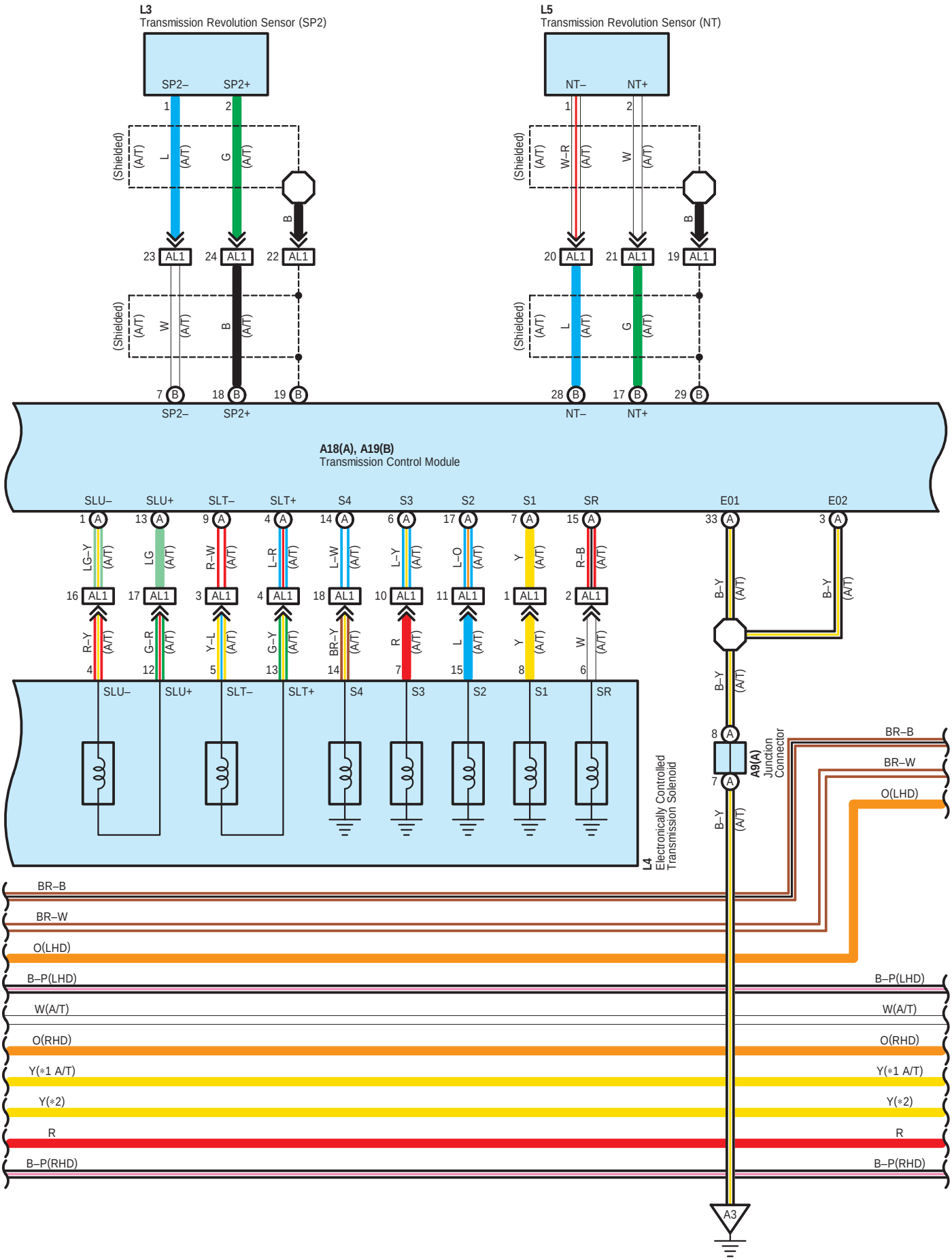
L3
Transmission Revolution Sensor (SP2)
SP2–
SP2+
L5
Transmission Revolution Sensor (NT)
NT–
NT+
(Shielded)
(A/T)
AL1
A18(A), A19(B)
Transmission Control Module
SLU–
SLU+
SLT–
SLT+
S4
S3
S2
S1
SR
E01
E02
A9(A)
Junction Connector
L4
Electronically Controlled Transmission Solenoid
BR–B
BR–W
O(LHD)
B–P(LHD)
W(A/T)
O(RHD)
Y(*1 A/T)
Y(*2)
R
B–P(RHD)
A3

Cruise Control, ECT and A/T Indicator (A/T), Engine Control, Shift Indicator (M/T) and Shift Lock

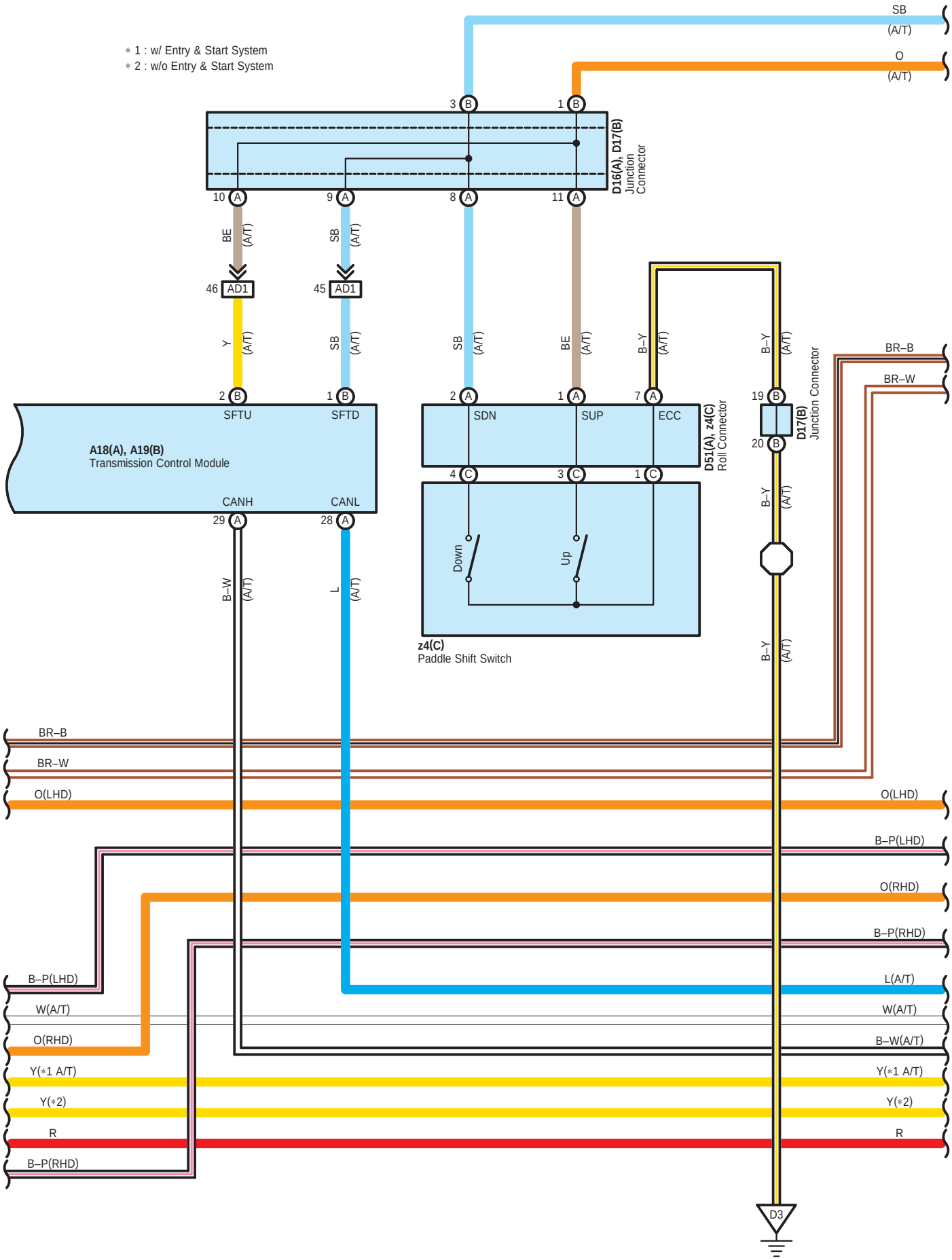

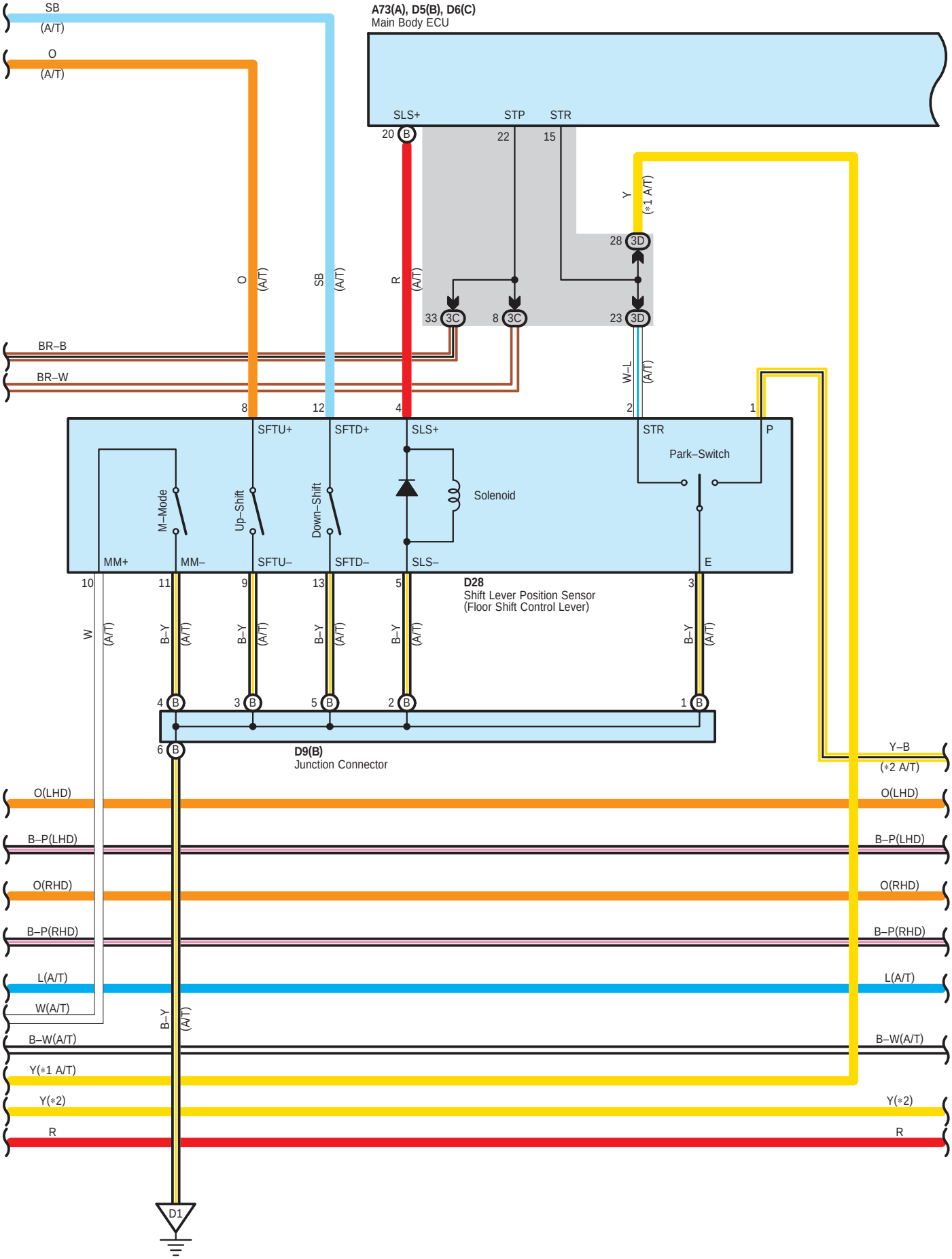
SB
(A/T)
O
(A/T)
A73(A), D5(B), D6(C)
Main Body ECU
SLS+
STP
STR
20 B
22
15
Y
(*1 A/T)
28 3D
O (A/T)
SB (A/T)
R (A/T)
33 3C
8 3C
23 3D
BR–B
BR–W
W–L
(A/T)
8
12
4
2
1
SFTU+
SFTD+
SLS+
STR
P
Park–Switch
M–Mode
Up–Shift
Down–Shift
Solenoid
MM+
MM–
SFTU–
SFTD–
SLS–
E
10
11
9
13
5
3
D28
Shift Lever Position Sensor
(Floor Shift Control Lever)
W (A/T)
B–Y (A/T)
4 B
3 B
5 B
2 B
1 B
6 B
D9(B)
Junction Connector
Y–B
(*2 A/T)
O(LHD)
B–P(LHD)
O(RHD)
B–P(RHD)
L(A/T)
W(A/T)
B–W(A/T)
Y(*1 A/T)
Y(*2)
R
D1

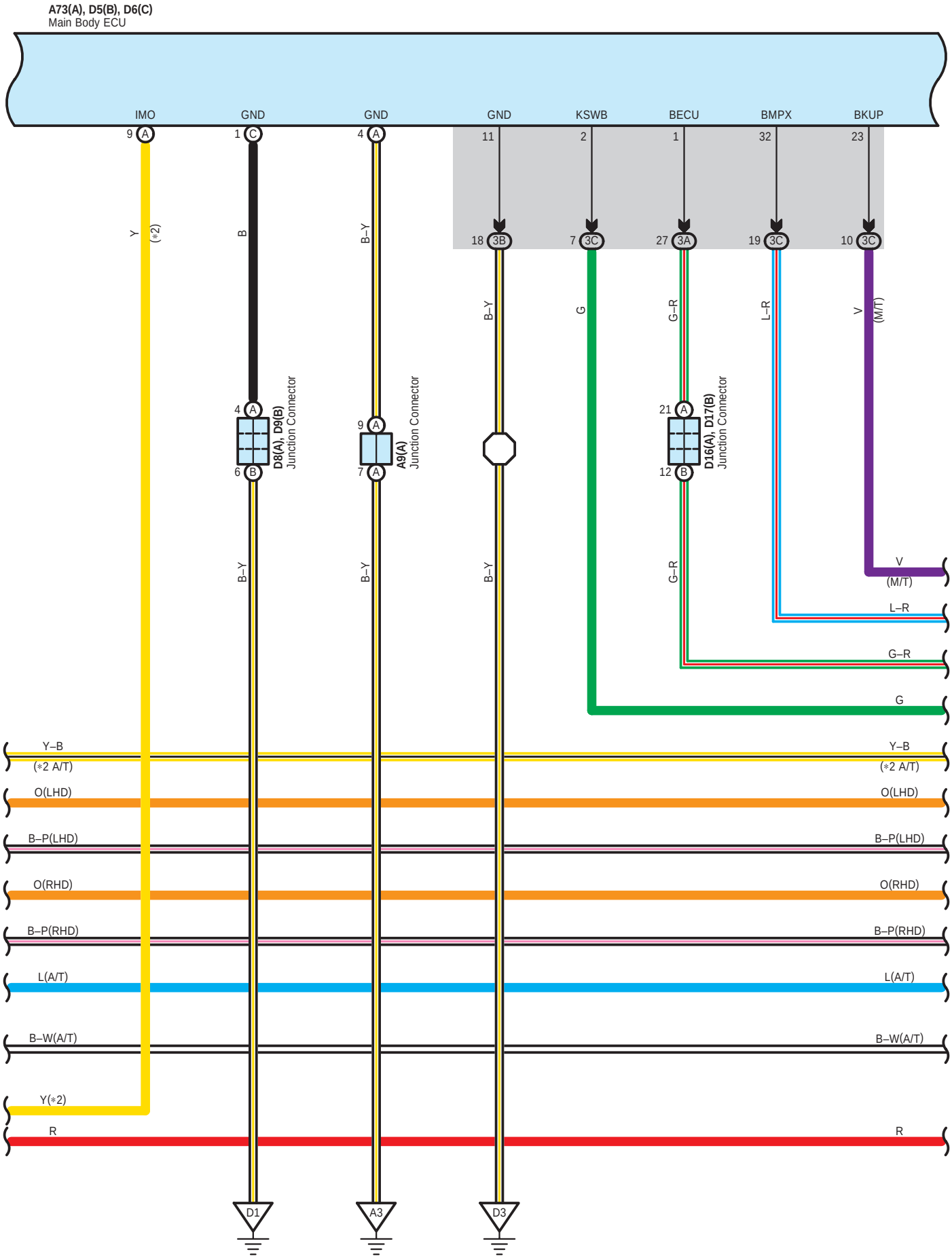
A73(A), D5(B), D6(C)
Main Body ECU
IMO
GND
GND
GND
KSWB
BECU
BMPX
BKUP
9 A
1 C
4 A
11
2
1
32
23
18 3B
7 3C
27 3A
19 3C
10 3C
Y
(*2)
B
B–Y
B–Y
G
G–R
L–R
V
(M/T)
4 A
6 B
D8(A), D9(B)
Junction Connector
9 A
7 A
A9(A)
Junction Connector
21 A
12 B
D16(A), D17(B)
Junction Connector
B–Y
B–Y
B–Y
G–R
V
(M/T)
L–R
G–R
G
Y–B
(*2 A/T)
O(LHD)
B–P(LHD)
O(RHD)
B–P(RHD)
L(A/T)
B–W(A/T)
Y(*2)
R
D1
A3
D3

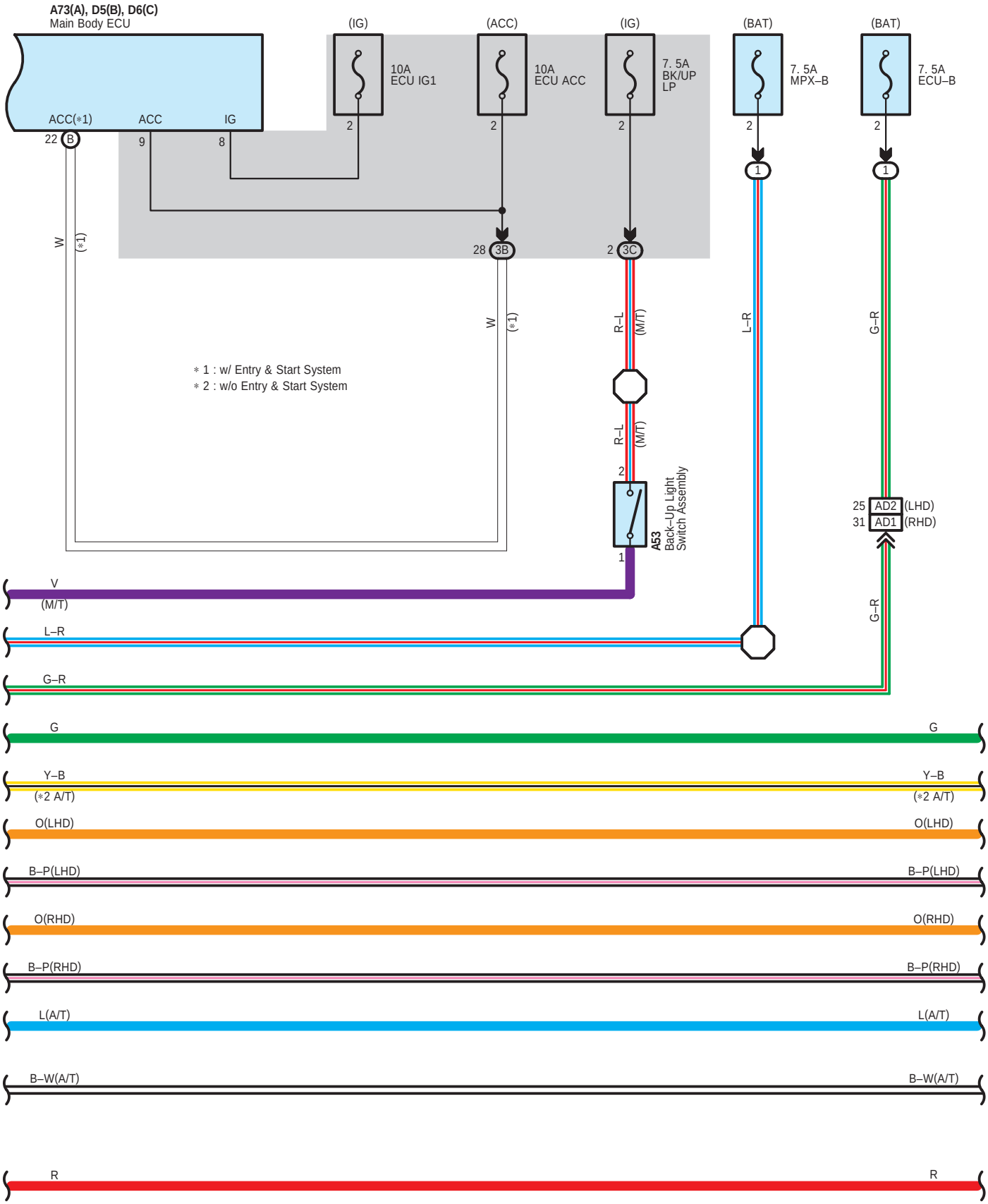
A73(A), D5(B), D6(C)
Main Body ECU
ACC(*1)
ACC
IG
22 B
9
8
(IG)
10A
ECU IG1
2
(ACC)
10A
ECU ACC
2
(IG)
7. 5A
BK/UP
LP
2
(BAT)
7. 5A
MPX–B
2
1
(BAT)
7. 5A
ECU–B
2
1
W
(*1)
28 3B
W
(*1)
2 3C
R–L
(M/T)
R–L
(M/T)
L–R
G–R
* 1 : w/ Entry & Start System
* 2 : w/o Entry & Start System
2
A53
Back–Up Light
Switch Assembly
1
25 AD2 (LHD)
31 AD1 (RHD)
V
(M/T)
L–R
G–R
G–R
G
G
Y–B
(*2 A/T)
Y–B
(*2 A/T)
O(LHD)
O(LHD)
B–P(LHD)
B–P(LHD)
O(RHD)
O(RHD)
B–P(RHD)
B–P(RHD)
L(A/T)
L(A/T)
B–W(A/T)
B–W(A/T)
R
R

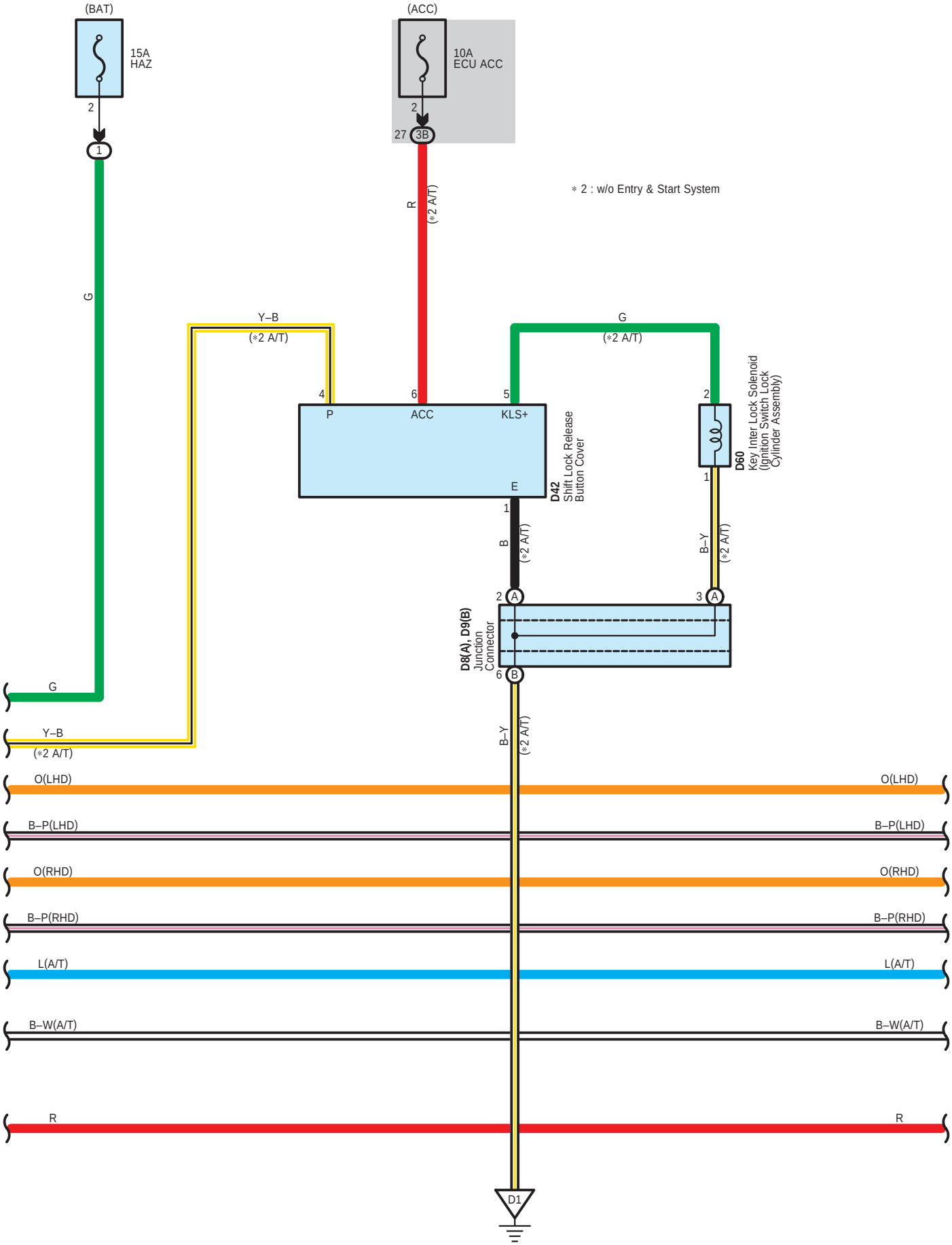
(BAT)
15A
HAZ
2
1
G
(ACC)
10A
ECU ACC
2
27 3B
R
(*2 A/T)
* 2 : w/o Entry & Start System
Y–B
(*2 A/T)
4
P
6
ACC
5
KLS+
E
D42
Shift Lock Release
Button Cover
G
(*2 A/T)
2
1
D60
Key Inter Lock Solenoid
(Ignition Switch Lock
Cylinder Assembly)
1
B
(*2 A/T)
B–Y
(*2 A/T)
2 A
3 A
D8(A), D9(B)
Junction
Connector
6 B
B–Y
(*2 A/T)
G
Y–B
(*2 A/T)
O(LHD)
O(LHD)
B–P(LHD)
B–P(LHD)
O(RHD)
O(RHD)
B–P(RHD)
B–P(RHD)
L(A/T)
L(A/T)
B–W(A/T)
B–W(A/T)
R
R
D1

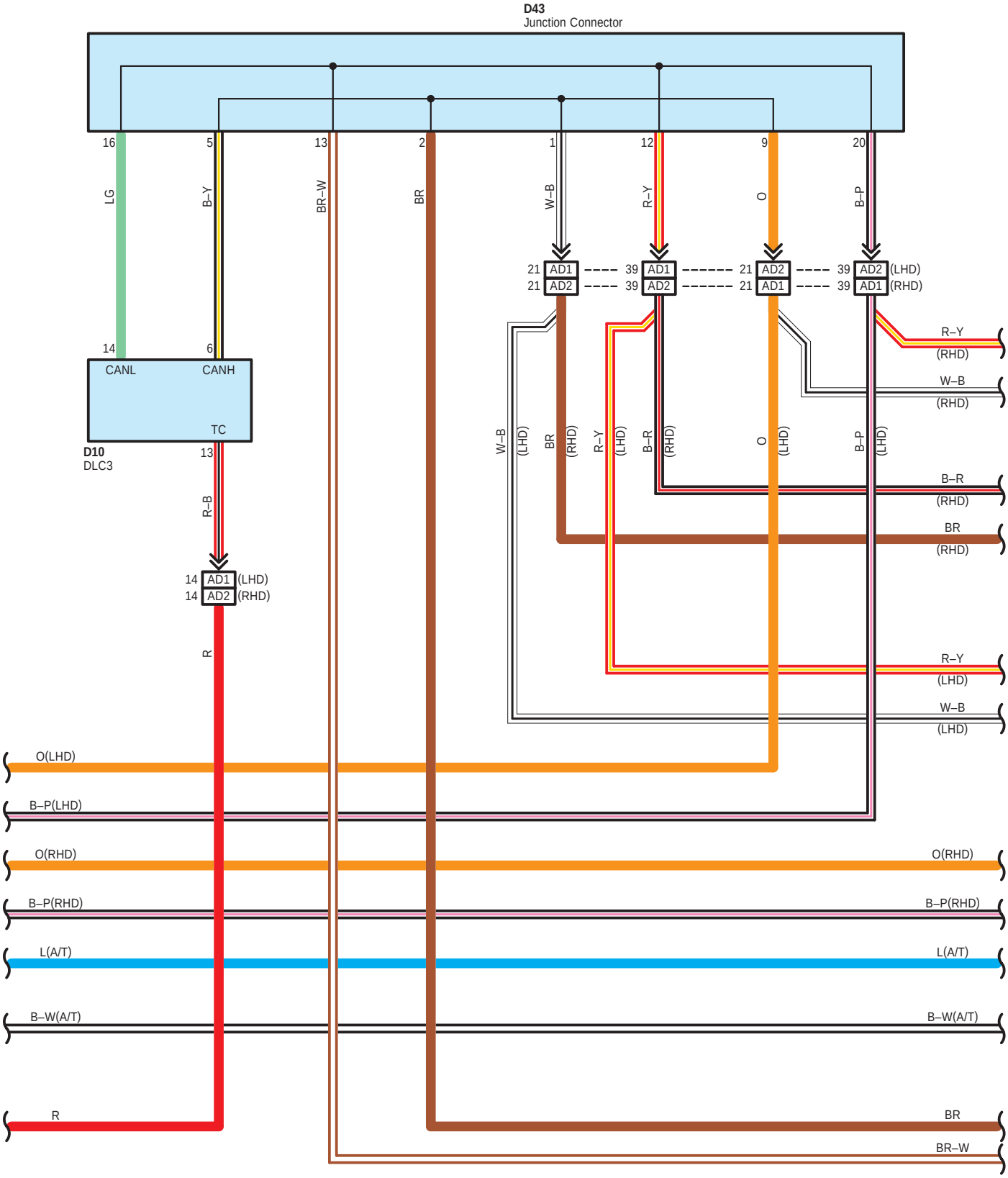
D43
Junction Connector
16
5
13
2
1
12
9
20
LG
B–Y
BR–W
BR
W–B
R–Y
O
B–P
21 AD1
21 AD2
39 AD1
39 AD2
21 AD2
21 AD1
39 AD2 (LHD)
39 AD1 (RHD)
14
6
CANL
CANH
TC
D10
DLC3
13
R–B
14 AD1 (LHD)
14 AD2 (RHD)
R
R–Y
(RHD)
W–B
(RHD)
W–B (LHD)
BR (RHD)
R–Y (LHD)
B–R (RHD)
O (LHD)
B–P (LHD)
B–R
(RHD)
BR
(RHD)
R–Y
(LHD)
W–B
(LHD)
O(LHD)
B–P(LHD)
O(RHD)
O(RHD)
B–P(RHD)
B–P(RHD)
L(A/T)
L(A/T)
B–W(A/T)
B–W(A/T)
R
BR
BR–W

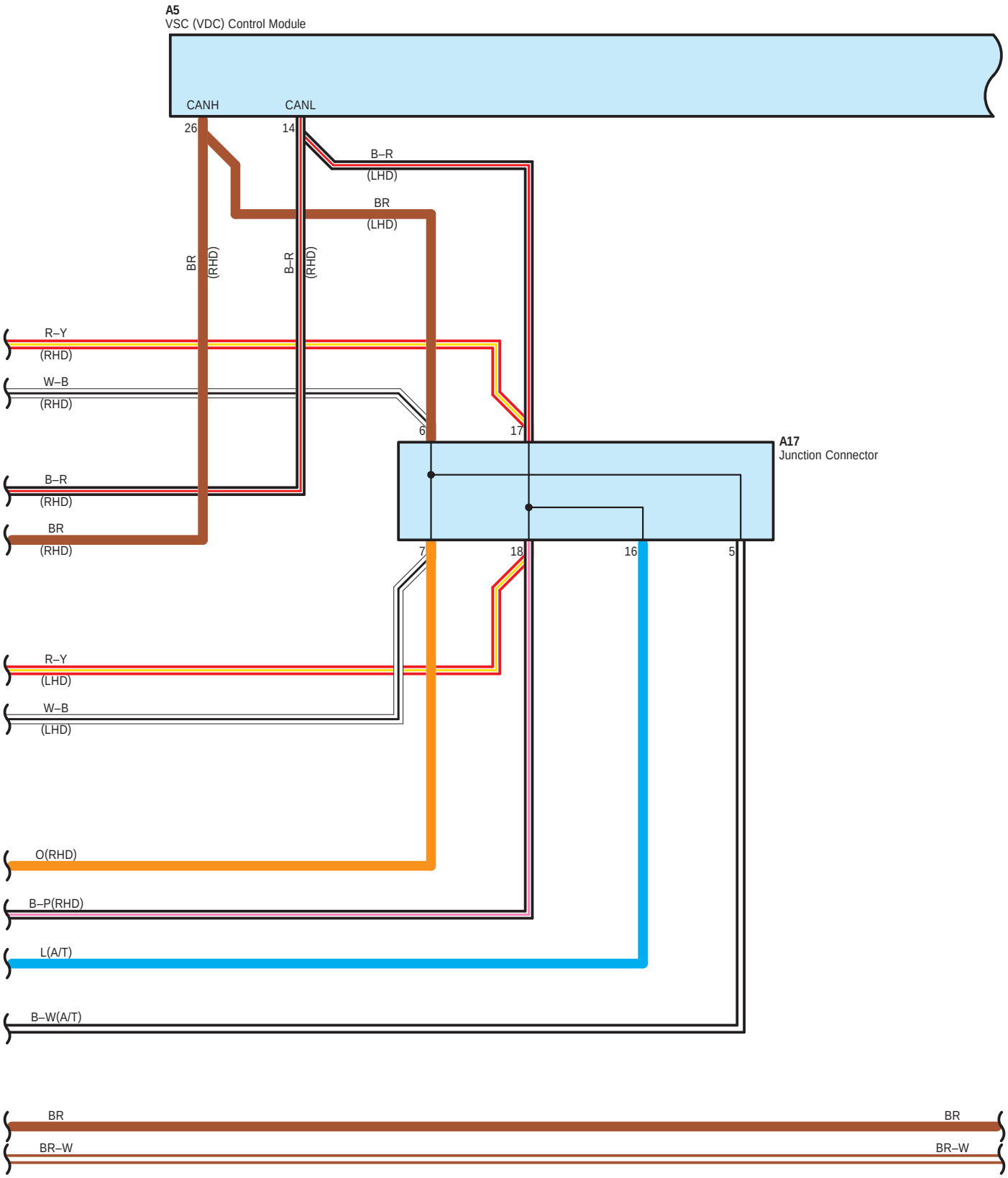
A5
VSC (VDC) Control Module
CANH
CANL
26
14
B–R
(LHD)
BR
(LHD)
BR
(RHD)
B–R
(RHD)
R–Y
(RHD)
W–B
(RHD)
6
17
A17
Junction Connector
B–R
(RHD)
BR
(RHD)
7
18
16
5
R–Y
(LHD)
W–B
(LHD)
O(RHD)
B–P(RHD)
L(A/T)
B–W(A/T)
BR
BR
BR–W
BR–W

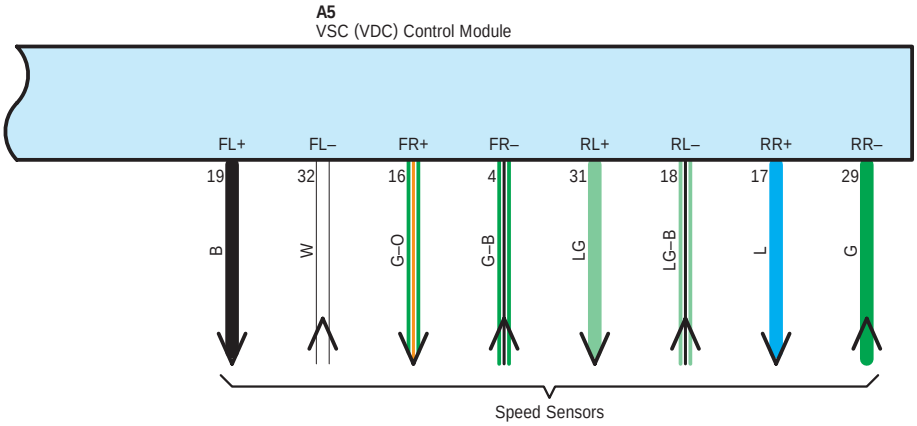
A5
VSC (VDC) Control Module
FL+
FL–
FR+
FR–
RL+
RL–
RR+
RR–
19
32
16
4
31
18
17
29
B
W
G–O
G–B
LG
LG–B
L
G
Speed Sensors

BR
BR
BR–W
BR–W

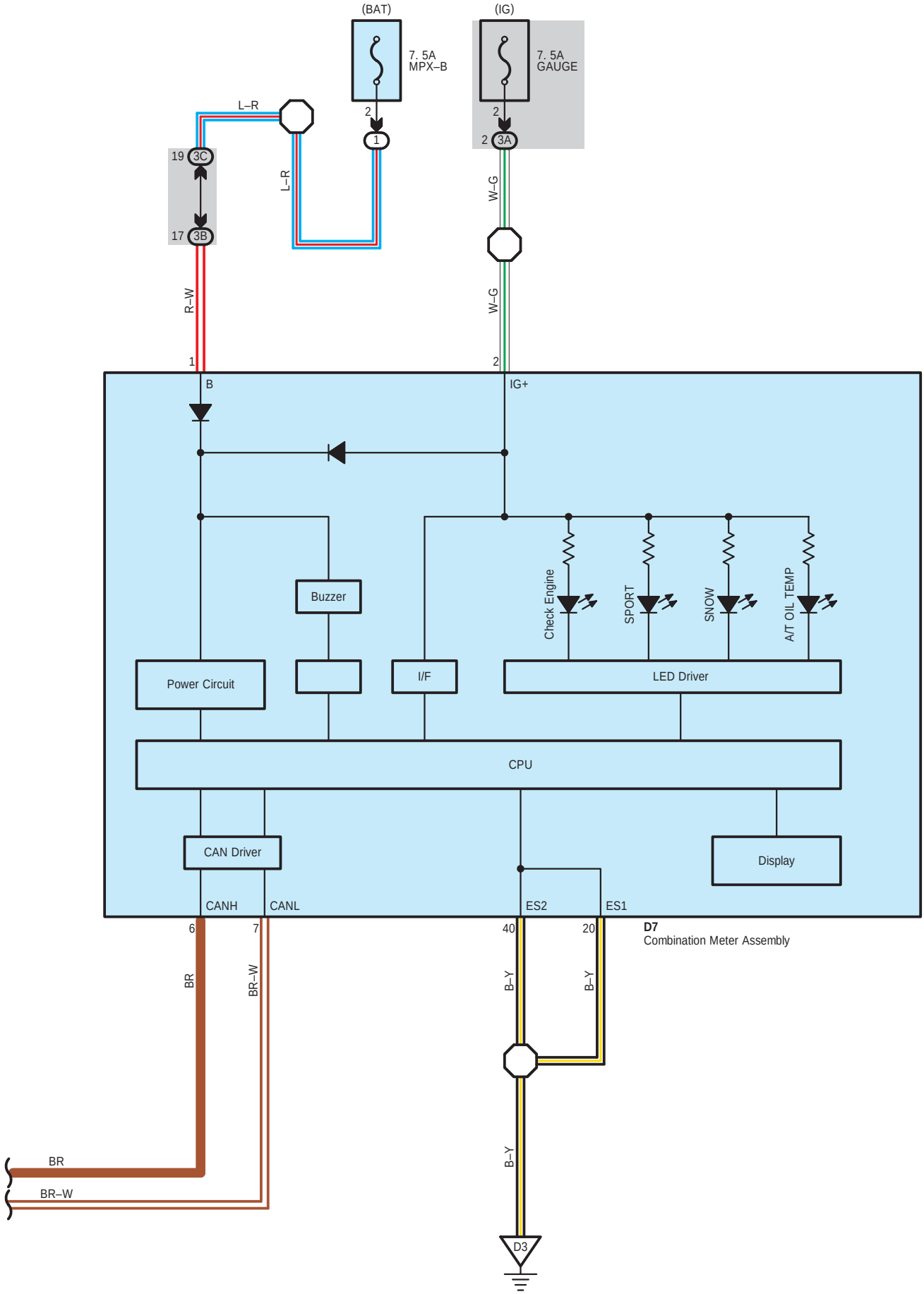
(BAT)
(IG)
7. 5A
MPX–B
7. 5A
GAUGE
L–R
19 3C
17 3B
R–W
W–G
1
2
B
IG+
Buzzer
Check Engine
SPORT
SNOW
A/T OIL TEMP
Power Circuit
I/F
LED Driver
CPU
CAN Driver
Display
CANH
CANL
ES2
ES1
6
7
40
20
D7
Combination Meter Assembly
BR
BR–W
B–Y
D3

○ : **Parts Location**

Code		See Page
A5		39 (LHD)
		47 (RHD)
A9	A	42 (LHD)
		50 (RHD)
A10	B	42 (LHD)
		50 (RHD)
A11		39 (LHD)
		47 (RHD)
A13		42 (LHD)
		50 (RHD)
A17		42 (LHD)
		50 (RHD)
A18	A	42 (LHD)
		50 (RHD)
A19	B	42 (LHD)
		50 (RHD)
A20		42 (LHD)
		50 (RHD)
A21		42 (LHD)
		50 (RHD)
A22		42 (LHD)
		50 (RHD)
A23		42 (LHD)
		50 (RHD)
A30		50 (RHD)
A33	A	42 (LHD)
		50 (RHD)
A34	B	42 (LHD)
		50 (RHD)
A35	C	42 (LHD)
		50 (RHD)
A36	D	42 (LHD)
		50 (RHD)
A37		42 (LHD)
		50 (RHD)
A43	A	39 (LHD)
		47 (RHD)
A53		39 (LHD)
		47 (RHD)
A54		39 (LHD)
		47 (RHD)
A66	A	50 (RHD)
A72	B	50 (RHD)
A73	A	42 (LHD)
		50 (RHD)
C1	A	38 (LHD)
		46 (RHD)
C2	B	38 (LHD)
		46 (RHD)
C3	C	38 (LHD)
		46 (RHD)
C4	D	38 (LHD)
		46 (RHD)
C5		38 (LHD)
		46 (RHD)
C6		38 (LHD)
		46 (RHD)
C7		38 (LHD)
		46 (RHD)

Code		See Page
C8		38 (LHD)
		46 (RHD)
C9		38 (LHD)
		46 (RHD)
C10		38 (LHD)
		46 (RHD)
C11		38 (LHD)
		46 (RHD)
C12		38 (LHD)
		46 (RHD)
C13		38 (LHD)
		46 (RHD)
C14		38 (LHD)
		46 (RHD)
C15		38 (LHD)
		46 (RHD)
C16		38 (LHD)
		46 (RHD)
C18		38 (LHD)
		46 (RHD)
C19		38 (LHD)
		46 (RHD)
C20		38 (LHD)
		46 (RHD)
C21		38 (LHD)
		46 (RHD)
C23		38 (LHD)
		46 (RHD)
C24		38 (LHD)
		46 (RHD)
C25		38 (LHD)
		46 (RHD)
C26		38 (LHD)
		46 (RHD)
C27		38 (LHD)
		46 (RHD)
C28		38 (LHD)
		46 (RHD)
C29		38 (LHD)
		46 (RHD)
C30		38 (LHD)
		46 (RHD)
C31		38 (LHD)
		46 (RHD)
C33		38 (LHD)
		46 (RHD)
C34		38 (LHD)
		46 (RHD)
C35		38 (LHD)
		46 (RHD)
C36		38 (LHD)
		46 (RHD)
C37		38 (LHD)
		46 (RHD)
C38		38 (LHD)
		46 (RHD)
C39		38 (LHD)
		46 (RHD)
D5	B	40 (LHD)

Code		See Page
D5	B	48 (RHD)
D6	C	40 (LHD)
		48 (RHD)
D7		40 (LHD)
		48 (RHD)
D8	A	40 (LHD)
		48 (RHD)
D9	B	40 (LHD)
		48 (RHD)
D10		40 (LHD)
		48 (RHD)
D16	A	40 (LHD)
		48 (RHD)
D17	B	40 (LHD)
		48 (RHD)
D28		40 (LHD)
		48 (RHD)
D35		40 (LHD)
		48 (RHD)
D36		40 (LHD)
		48 (RHD)
D40	A	41 (LHD)
		49 (RHD)
D41	B	41 (LHD)
		49 (RHD)
D42		41 (LHD)
		49 (RHD)
D43		41 (LHD)
		49 (RHD)
D46	A	41 (LHD)
		49 (RHD)
D47	B	41 (LHD)
		49 (RHD)
D48	C	41 (LHD)
		49 (RHD)
D51	A	41 (LHD)
		49 (RHD)
D55		41 (LHD)
		49 (RHD)
D60		41 (LHD)
		49 (RHD)
G7		44 (LHD)
		52 (RHD)
G12		44 (LHD)
		52 (RHD)
L2		39 (LHD)
		47 (RHD)
L3		39 (LHD)
		47 (RHD)
L4		39 (LHD)
		47 (RHD)
L5		39 (LHD)
		47 (RHD)
d1		39 (LHD)
		47 (RHD)
z4	C	42 (LHD)
		50 (RHD)
z5	D	42 (LHD)
		50 (RHD)

: Relay Blocks

Code	See Page	Relay Blocks (Relay Block Location)
1	24	Engine Room R/B (Engine Compartment Right)

: Junction Block and Wire Harness Connector

Code	See Page	Junction Block and Wire Harness (Connector Location)
1E	24	Engine Room Main Wire and Engine Room J/B (Engine Compartment Right)
3A	26	Instrument Panel Wire and Instrument Panel J/B Assembly (Instrument Panel Reinforcement)
3B		
3C	26	Engine Room Main Wire and Instrument Panel J/B Assembly (Instrument Panel Reinforcement)
3D	26	Instrument Panel Wire and Instrument Panel J/B Assembly (Instrument Panel Reinforcement)

: Connector Joining Wire Harness and Wire Harness

Code	See Page	Joining Wire Harness and Wire Harness (Connector Location)
AC1	54 (LHD)	Engine Room Main Wire and Engine Wire (Engine Unit)
	58 (RHD)	
AC2	54 (LHD)	
	58 (RHD)	
AD1	55 (LHD)	Engine Room Main Wire and Instrument Panel Wire (Cowl Side Panel RH)
	59 (RHD)	
AD2	55 (LHD)	Engine Room Main Wire and Instrument Panel Wire (Instrument Panel Reinforcement)
	59 (RHD)	
AD3	55 (LHD)	Engine Room Main Wire and Instrument Panel Wire (Cowl Side Panel LH)
	59 (RHD)	Engine Room Main Wire and Instrument Panel Wire (Cowl Side Panel RH)
AL1	54 (LHD)	Engine Room Main Wire and Transmission Wire (Dash Panel)
	58 (RHD)	
AL2	54 (LHD)	
	58 (RHD)	
Cd1	54 (LHD)	Engine Wire and No. 1 Engine Wire (Engine Unit)
	58 (RHD)	
GD2	55 (LHD)	No. 1 Floor Wire and Instrument Panel Wire (Cowl Side Panel RH)
	59 (RHD)	

: Ground Points

Code	See Page	Ground Points Location
A1	54 (LHD)	Front Fender Apron LH
	58 (RHD)	
A3	55 (LHD)	Cowl Side Panel RH
	59 (RHD)	Cowl Side Panel LH
A7	54 (LHD)	Front Fender Apron RH
	58 (RHD)	
C1	54 (LHD)	Engine Unit
	58 (RHD)	
D1	55 (LHD)	Cowl Side Panel LH
	59 (RHD)	Cowl Side Panel RH
D3	55 (LHD)	Instrument Panel Brace RH
	59 (RHD)	Instrument Panel Brace LH
G1	56 (LHD)	Quarter Wheel House Panel RH
	60 (RHD)	

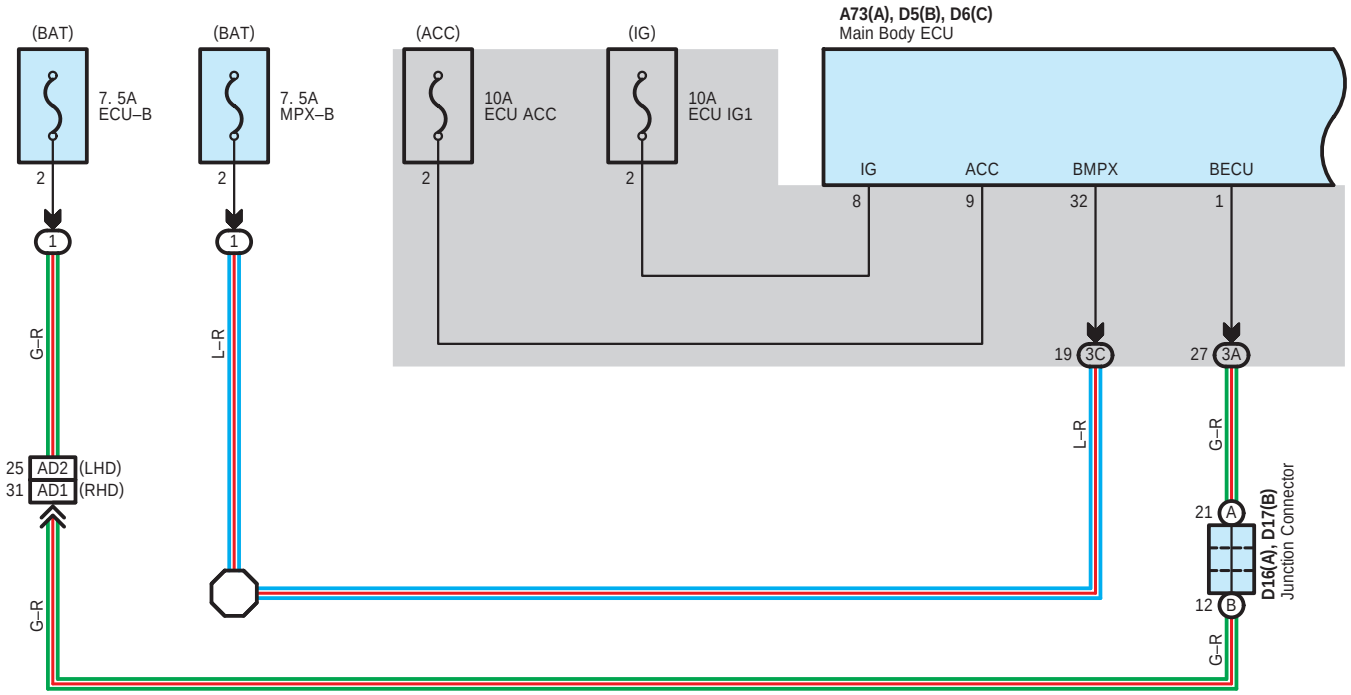
(BAT)
7. 5A
ECU–B
2
1
G–R
25 AD2 (LHD)
31 AD1 (RHD)
G–R
(BAT)
7. 5A
MPX–B
2
1
L–R
(ACC)
10A
ECU ACC
2
(IG)
10A
ECU IG1
2
A73(A), D5(B), D6(C)
Main Body ECU
IG
8
ACC
9
BMPX
32
BECU
1
19 3C
L–R
27 3A
G–R
21 A
12 B
D16(A), D17(B)
Junction Connector
G–R

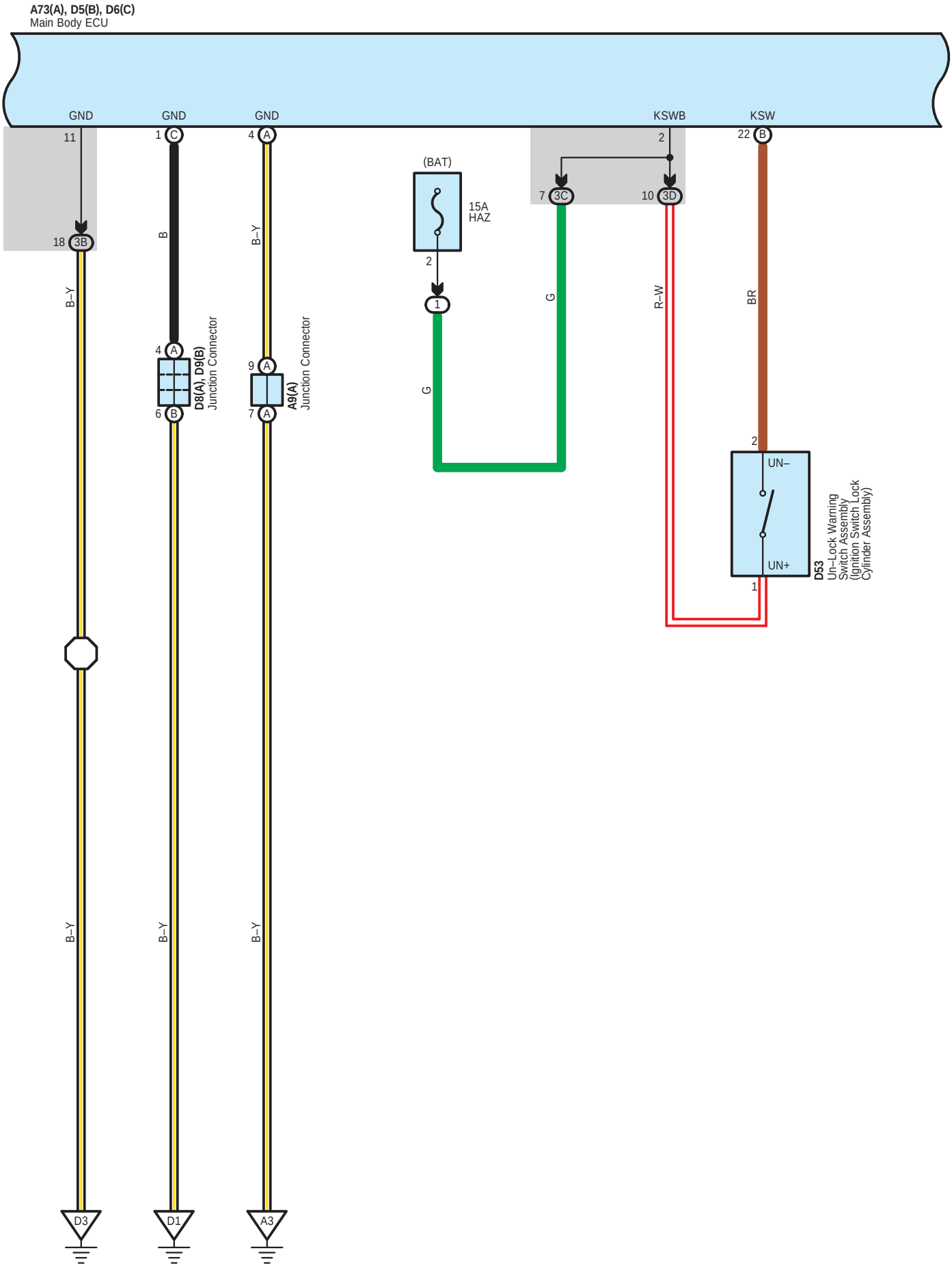
A73(A), D5(B), D6(C)
Main Body ECU
GND
GND
GND
KSWB
KSW
11
1 C
4 A
2
22 B
(BAT)
15A
HAZ
7 3C
10 3D
18 3B
B
B–Y
2
1
G
G
R–W
BR
4 A
6 B
D8(A), D9(B)
Junction Connector
9 A
7 A
A9(A)
Junction Connector
2
UN–
UN+
1
D53
Un–Lock Warning
Switch Assembly
(Ignition Switch Lock
Cylinder Assembly)
B–Y
B–Y
B–Y
D3
D1
A3

Engine Immobiliser System (w/o Entry & Start System)

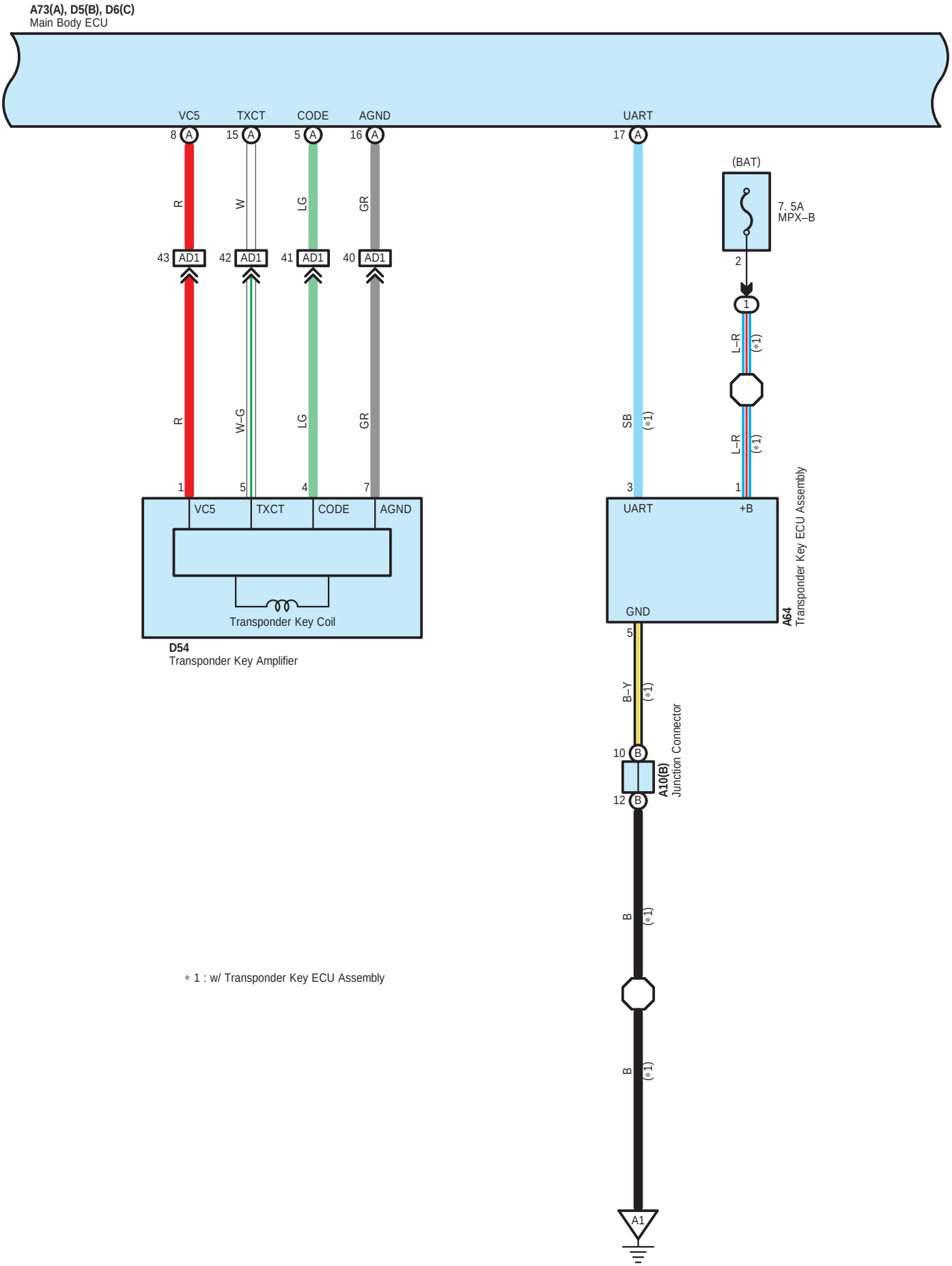

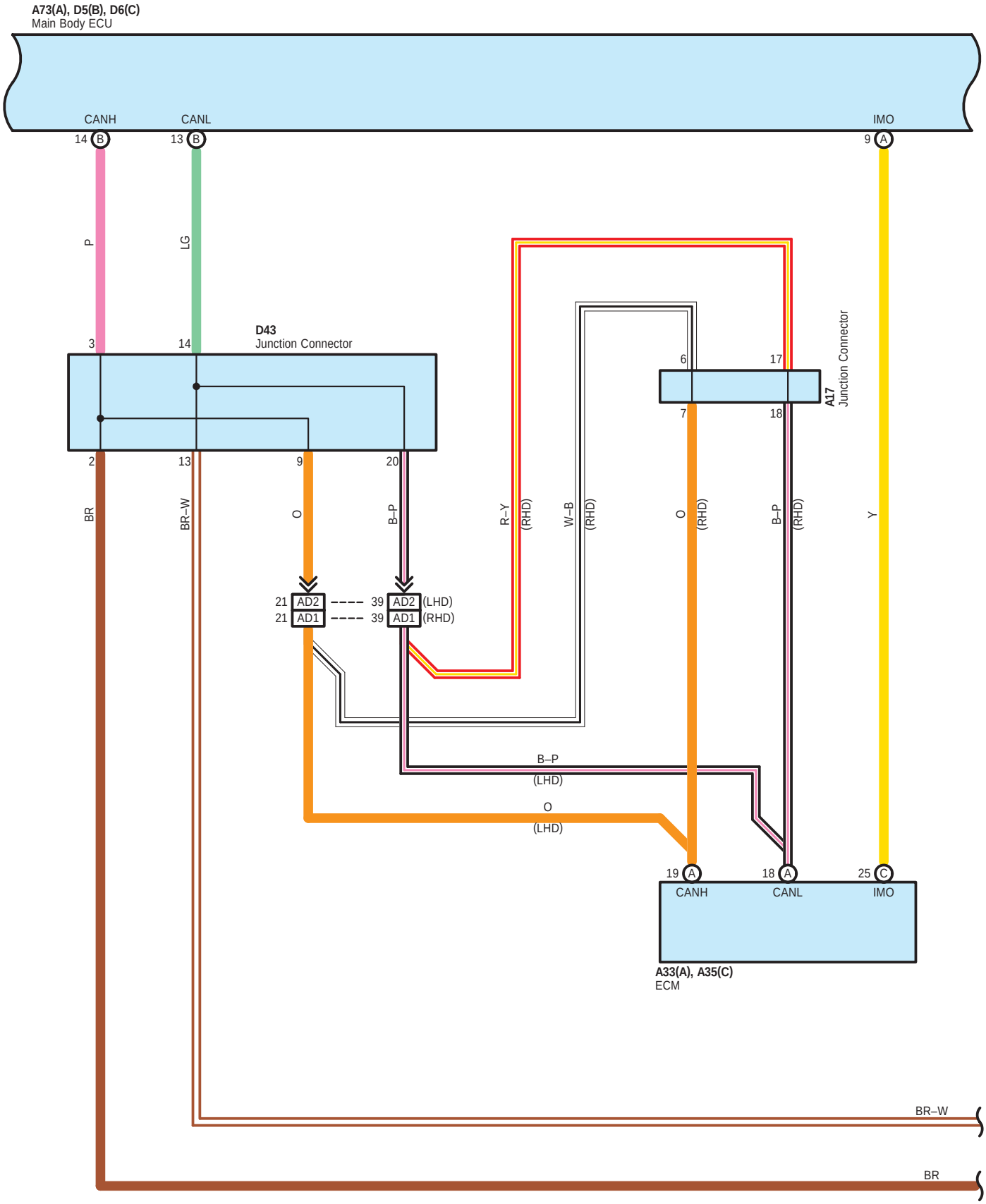
A73(A), D5(B), D6(C)
Main Body ECU
CANH
CANL
IMO
14 B
13 B
9 A
P
LG
D43
Junction Connector
3
14
2
13
9
20
BR
BR–W
O
B–P
R–Y (RHD)
W–B (RHD)
O (RHD)
B–P (RHD)
Y
A17
Junction Connector
6
17
7
18
21 AD2
21 AD1
39 AD2 (LHD)
39 AD1 (RHD)
B–P
(LHD)
O
(LHD)
19 A
18 A
25 C
CANH
CANL
IMO
A33(A), A35(C)
ECM
BR–W
BR

Engine Immobiliser System (w/o Entry & Start System)

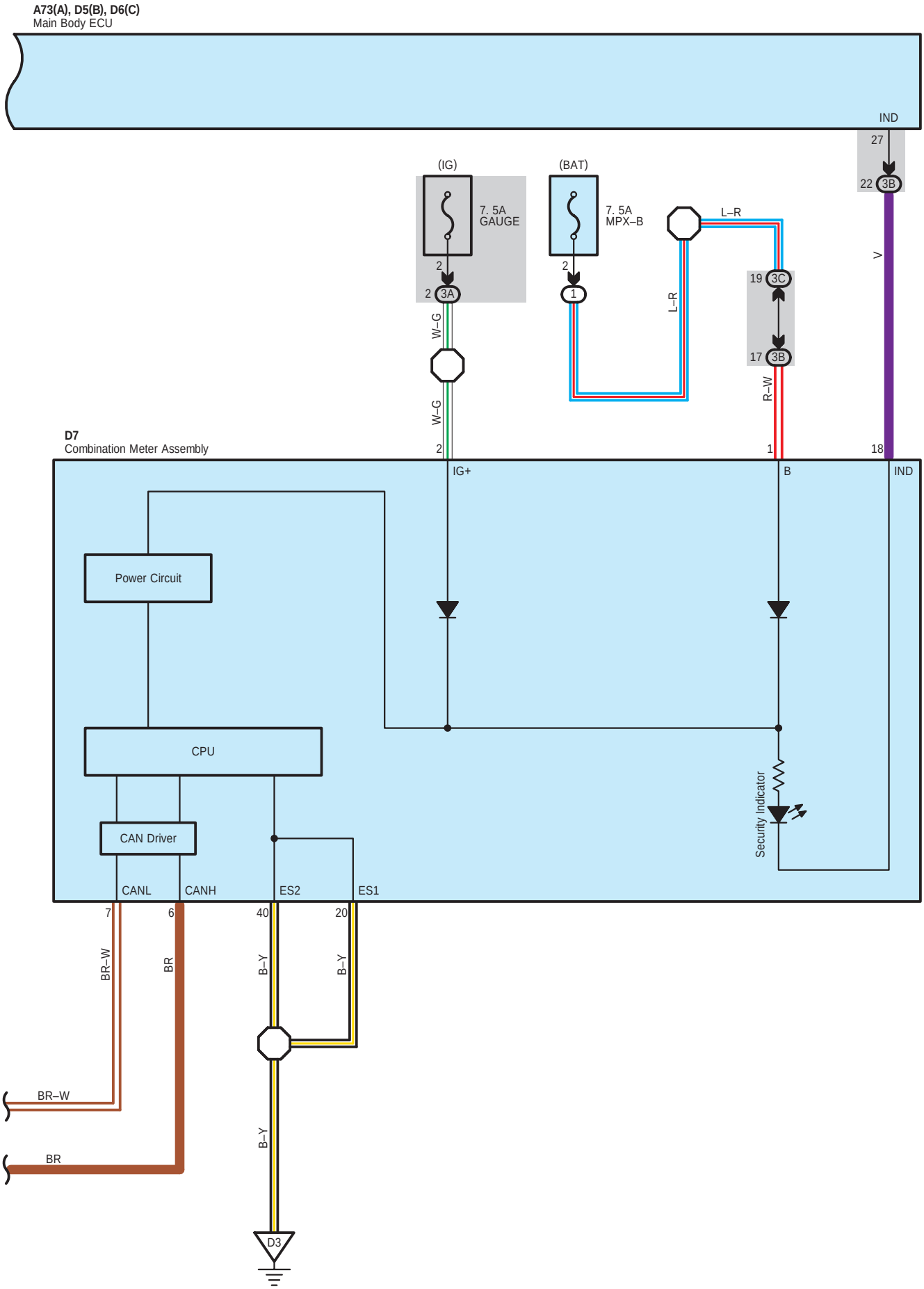

○ : **Parts Location**

Code		See Page	Code		See Page	Code		See Page
A9	A	42 (LHD)	A73	A	42 (LHD)	D9	B	48 (RHD)
		50 (RHD)			50 (RHD)	D16	A	40 (LHD)
A10	B	42 (LHD)	D5	B	40 (LHD)			48 (RHD)
		50 (RHD)			48 (RHD)	D17	B	40 (LHD)
A17		50 (RHD)	D6	C	40 (LHD)			48 (RHD)
A33	A	42 (LHD)			48 (RHD)	D43		41 (LHD)
		50 (RHD)	D7		40 (LHD)			49 (RHD)
A35	C	42 (LHD)			48 (RHD)	D53		41 (LHD)
		50 (RHD)	D8	A	40 (LHD)			49 (RHD)
A64		42 (LHD)			48 (RHD)	D54		41 (LHD)
		50 (RHD)	D9	B	40 (LHD)			49 (RHD)

▭ : **Relay Blocks**

Code	See Page	Relay Blocks (Relay Block Location)
1	24	Engine Room R/B (Engine Compartment Right)

▭ : **Junction Block and Wire Harness Connector**

Code	See Page	Junction Block and Wire Harness (Connector Location)
3A	26	Instrument Panel Wire and Instrument Panel J/B Assembly (Instrument Panel Reinforcement)
3B		
3C	26	Engine Room Main Wire and Instrument Panel J/B Assembly (Instrument Panel Reinforcement)
3D	26	Instrument Panel Wire and Instrument Panel J/B Assembly (Instrument Panel Reinforcement)

▭ : **Connector Joining Wire Harness and Wire Harness**

Code	See Page	Joining Wire Harness and Wire Harness (Connector Location)
AD1	55 (LHD)	Engine Room Main Wire and Instrument Panel Wire (Cowl Side Panel RH)
	59 (RHD)	
AD2	55 (LHD)	Engine Room Main Wire and Instrument Panel Wire (Instrument Panel Reinforcement)

▽ : **Ground Points**

Code	See Page	Ground Points Location
A1	54 (LHD)	Front Fender Apron LH
	58 (RHD)	
A3	55 (LHD)	Cowl Side Panel RH
	59 (RHD)	Cowl Side Panel LH
D1	55 (LHD)	
	59 (RHD)	Cowl Side Panel RH
D3	55 (LHD)	Instrument Panel Brace RH
	59 (RHD)	Instrument Panel Brace LH

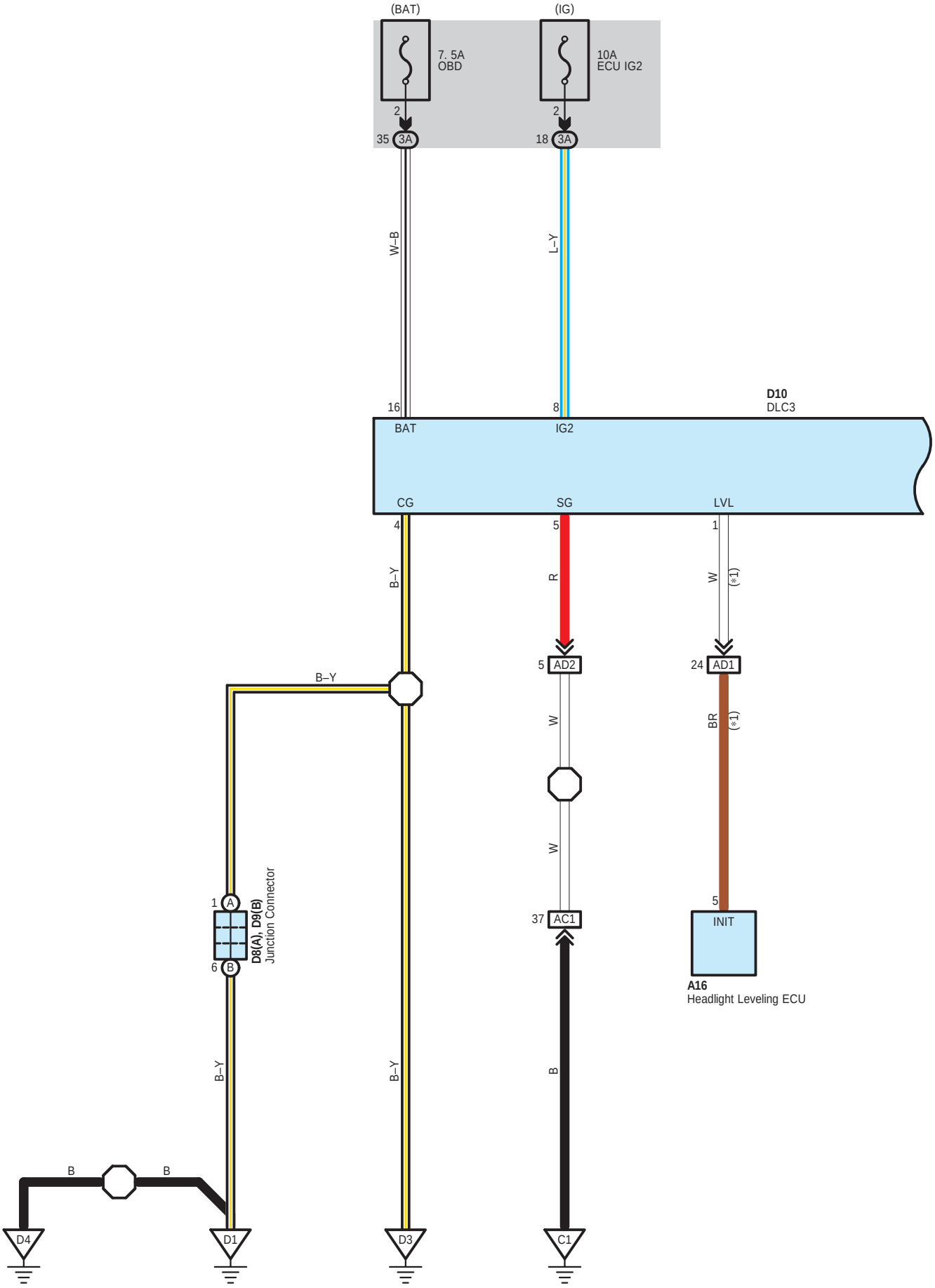
(BAT)
(IG)
7. 5A
OBD
10A
ECU IG2
2
35 3A
18 3A
W–B
L–Y
16
BAT
8
IG2
D10
DLC3
CG
SG
LVL
4
5
1
B–Y
R
W
(*1)
5 AD2
24 AD1
B–Y
W
BR
(*1)
W
1 A
6 B
D8(A), D9(B)
Junction Connector
37 AC1
5
INIT
A16
Headlight Leveling ECU
B–Y
B–Y
B
B
B
D4
D1
D3
C1

∗ 1 : w/ Headlight Beam Level Control (Automatic)

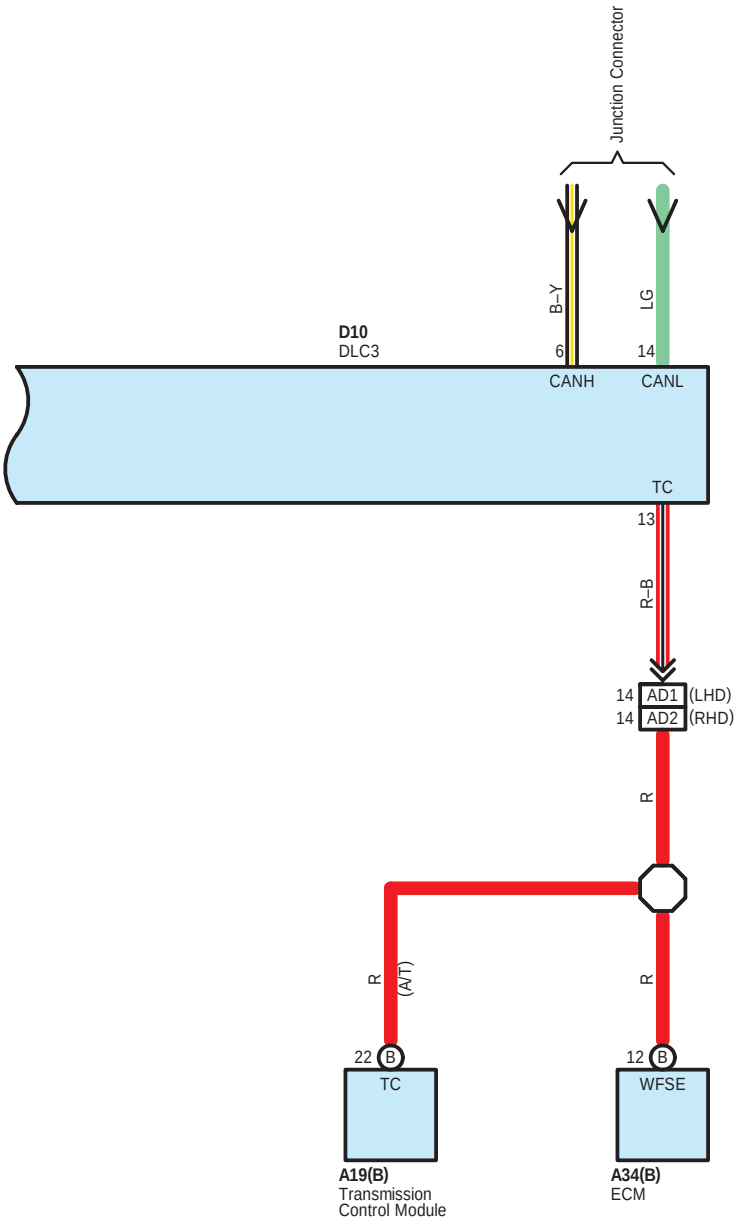

○ : **Parts Location**

Code		See Page	Code		See Page	Code		See Page
A16		42 (LHD)	A34	B	42 (LHD)	D9	B	40 (LHD)
		50 (RHD)			50 (RHD)			48 (RHD)
A19	B	42 (LHD)	D8	A	40 (LHD)	D10		40 (LHD)
		50 (RHD)			48 (RHD)			48 (RHD)

: **Junction Block and Wire Harness Connector**

Code	See Page	Junction Block and Wire Harness (Connector Location)
3A	26	Instrument Panel Wire and Instrument Panel J/B Assembly (Instrument Panel Reinforcement)

: **Connector Joining Wire Harness and Wire Harness**

Code	See Page	Joining Wire Harness and Wire Harness (Connector Location)
AC1	54 (LHD)	Engine Room Main Wire and Engine Wire (Engine Unit)
	58 (RHD)	
AD1	55 (LHD)	Engine Room Main Wire and Instrument Panel Wire (Cowl Side Panel RH)
	59 (RHD)	
AD2	55 (LHD)	Engine Room Main Wire and Instrument Panel Wire (Instrument Panel Reinforcement)
	59 (RHD)	

▽ : **Ground Points**

Code	See Page	Ground Points Location
C1	54 (LHD)	Engine Unit
	58 (RHD)	
D1	55 (LHD)	Cowl Side Panel LH
	59 (RHD)	Cowl Side Panel RH
D3	55 (LHD)	Instrument Panel Brace RH
	59 (RHD)	Instrument Panel Brace LH
D4	55 (LHD)	Cowl Side Panel RH
	59 (RHD)	Cowl Side Panel LH

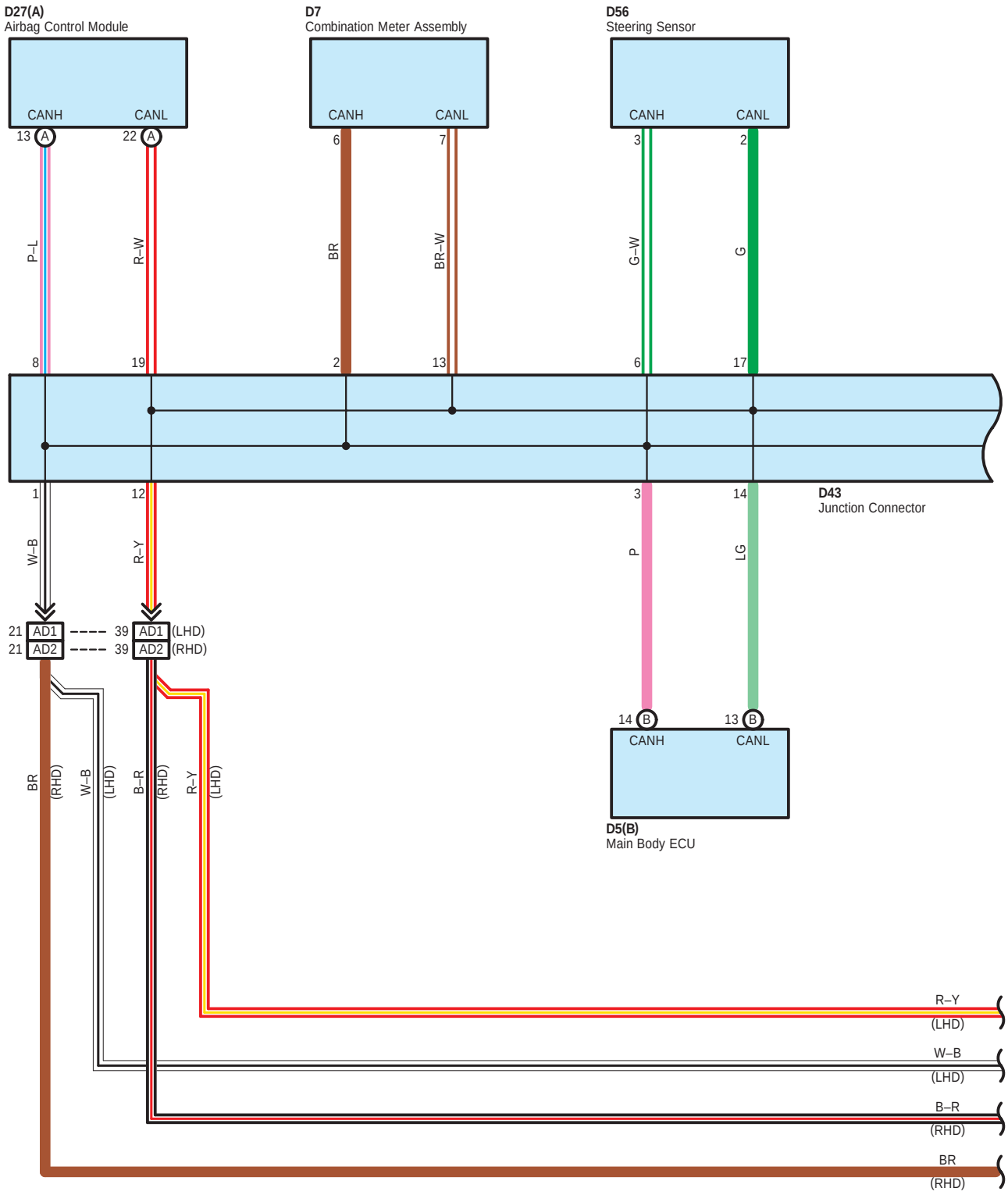
D27(A)
Airbag Control Module
CANH
CANL
13 A
22 A
P–L
R–W
8
19
D7
Combination Meter Assembly
CANH
CANL
6
7
BR
BR–W
2
13
D56
Steering Sensor
CANH
CANL
3
2
G–W
G
6
17
D43
Junction Connector
1
12
3
14
W–B
R–Y
P
LG
21 AD1
21 AD2
39 AD1 (LHD)
39 AD2 (RHD)
14 B
13 B
CANH
CANL
D5(B)
Main Body ECU
BR (RHD)
W–B (LHD)
B–R (RHD)
R–Y (LHD)
R–Y (LHD)
W–B (LHD)
B–R (RHD)
BR (RHD)

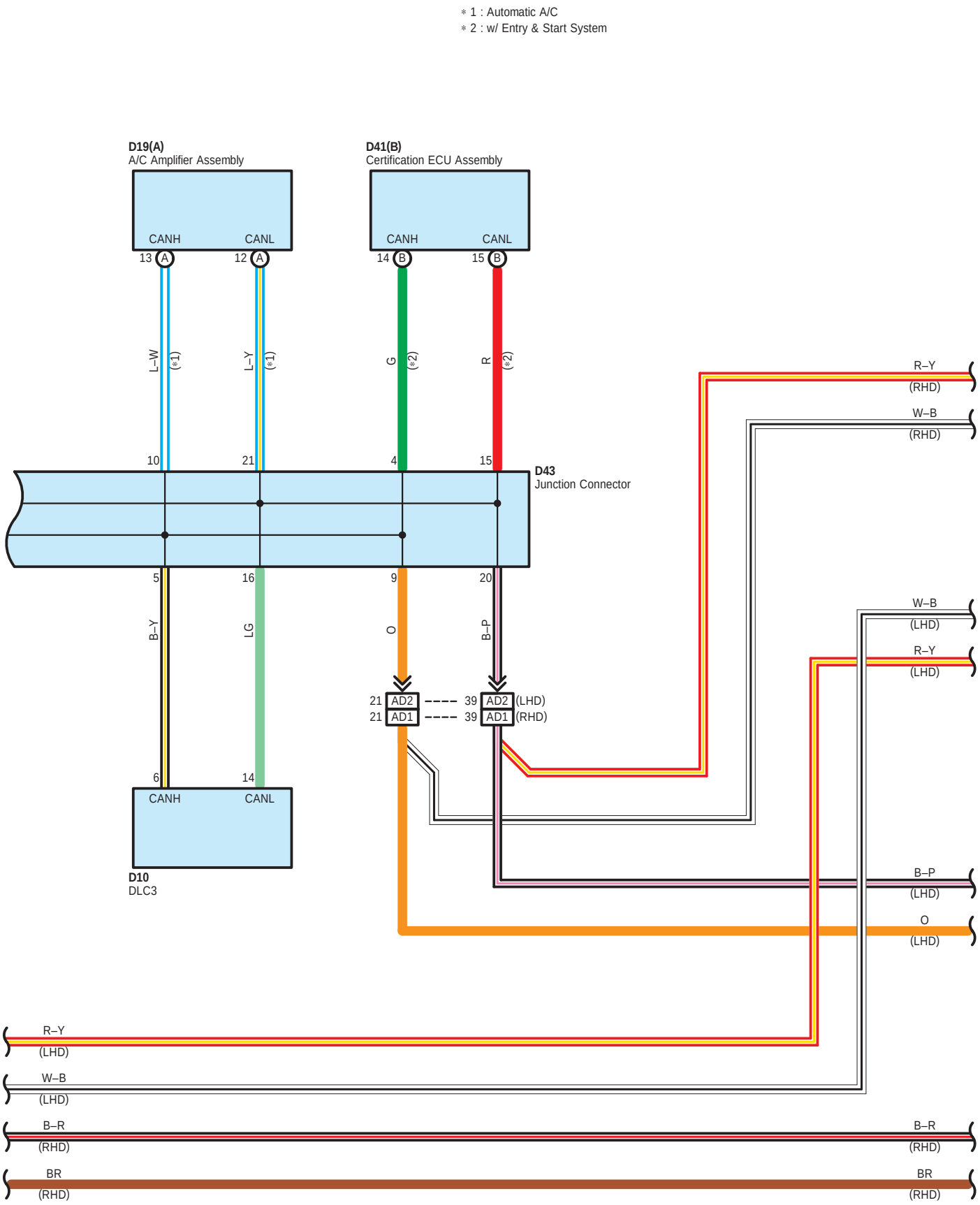
* 1 : Automatic A/C
* 2 : w/ Entry & Start System
D19(A)
A/C Amplifier Assembly
CANH
CANL
13 A
12 A
D41(B)
Certification ECU Assembly
CANH
CANL
14 B
15 B
L–W (*1)
L–Y (*1)
G (*2)
R (*2)
10
21
4
15
D43
Junction Connector
5
16
9
20
B–Y
LG
O
B–P
21 AD2 ---- 39 AD2 (LHD)
21 AD1 ---- 39 AD1 (RHD)
6
14
CANH
CANL
D10
DLC3
R–Y (RHD)
W–B (RHD)
W–B (LHD)
R–Y (LHD)
B–P (LHD)
O (LHD)
R–Y (LHD)
W–B (LHD)
B–R (RHD)
B–R (RHD)
BR (RHD)
BR (RHD)

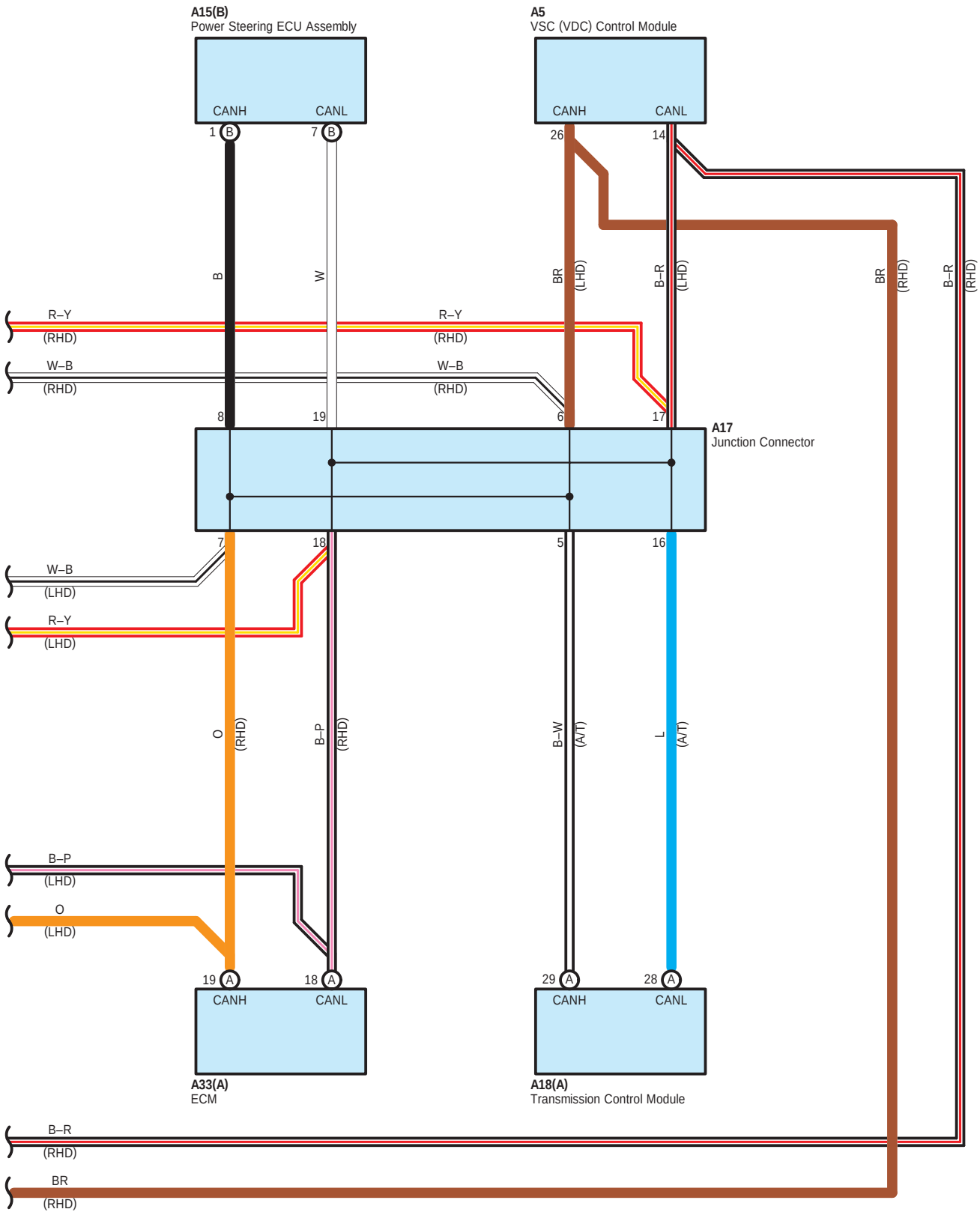
A15(B)
Power Steering ECU Assembly
CANH
CANL
1 B
7 B
A5
VSC (VDC) Control Module
CANH
CANL
26
14
B
W
BR (LHD)
B–R (LHD)
BR (RHD)
B–R (RHD)
R–Y (RHD)
R–Y (RHD)
W–B (RHD)
W–B (RHD)
8
19
6
17
A17
Junction Connector
7
18
5
16
W–B (LHD)
R–Y (LHD)
O (RHD)
B–P (RHD)
B–W (A/T)
L (A/T)
B–P (LHD)
O (LHD)
19 A
18 A
29 A
28 A
CANH
CANL
CANH
CANL
A33(A)
ECM
A18(A)
Transmission Control Module
B–R (RHD)
BR (RHD)

○ : **Parts Location**

Code		See Page	Code		See Page	Code		See Page
A5		39 (LHD)	A33	A	50 (RHD)	D27	A	40 (LHD)
		47 (RHD)	D5	B	40 (LHD)			48 (RHD)
A15	B	42 (LHD)			48 (RHD)	D41	B	41 (LHD)
		50 (RHD)	D7		40 (LHD)			49 (RHD)
A17		42 (LHD)			48 (RHD)	D43		41 (LHD)
		50 (RHD)	D10		40 (LHD)			49 (RHD)
A18	A	42 (LHD)			48 (RHD)	D56		41 (LHD)
		50 (RHD)	D19	A	40 (LHD)			49 (RHD)
A33	A	42 (LHD)			48 (RHD)			

▭ : **Connector Joining Wire Harness and Wire Harness**

Code	See Page	Joining Wire Harness and Wire Harness (Connector Location)
AD1	55 (LHD)	Engine Room Main Wire and Instrument Panel Wire (Cowl Side Panel RH)
	59 (RHD)	
AD2	55 (LHD)	Engine Room Main Wire and Instrument Panel Wire (Instrument Panel Reinforcement)
	59 (RHD)	

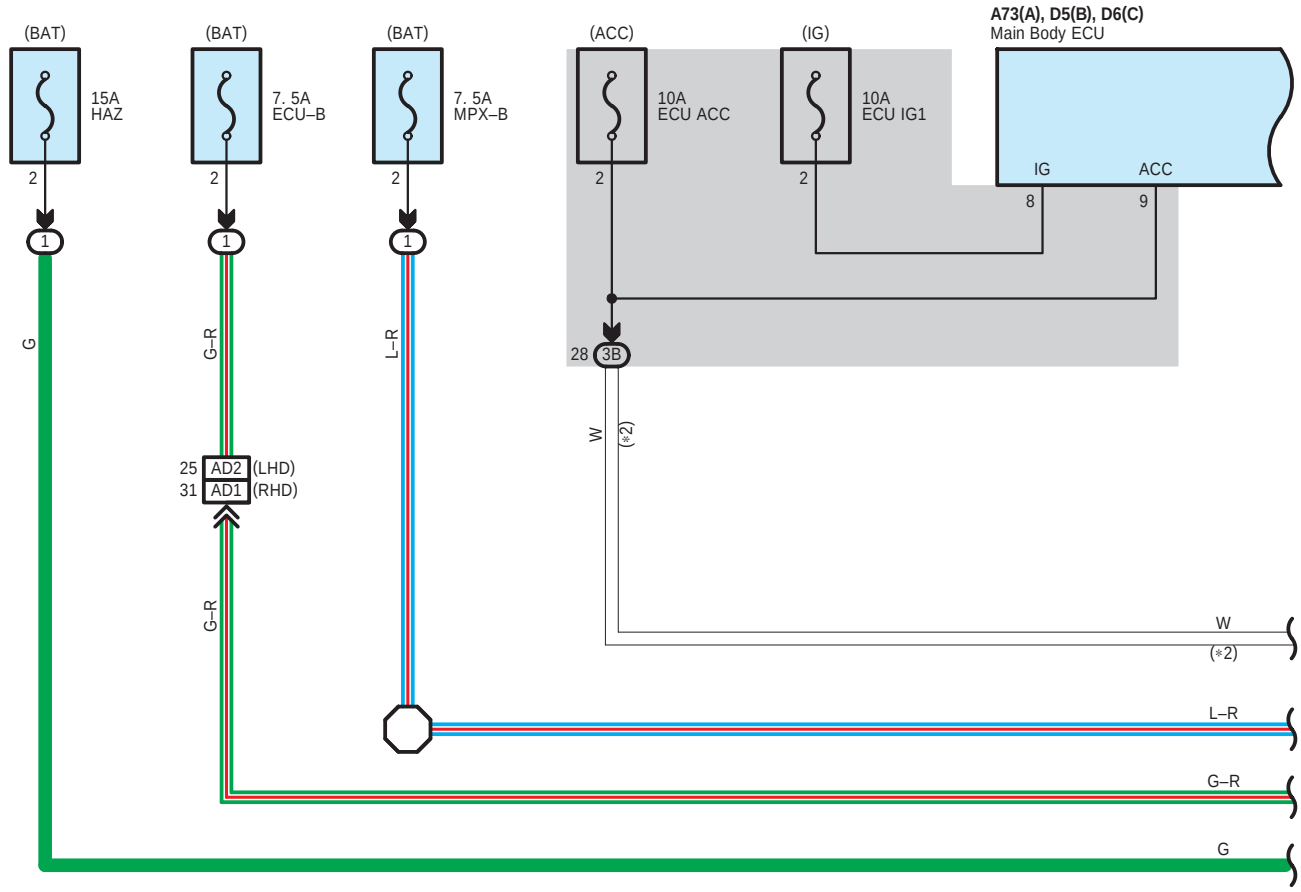

* 2 : w/ Entry & Start System

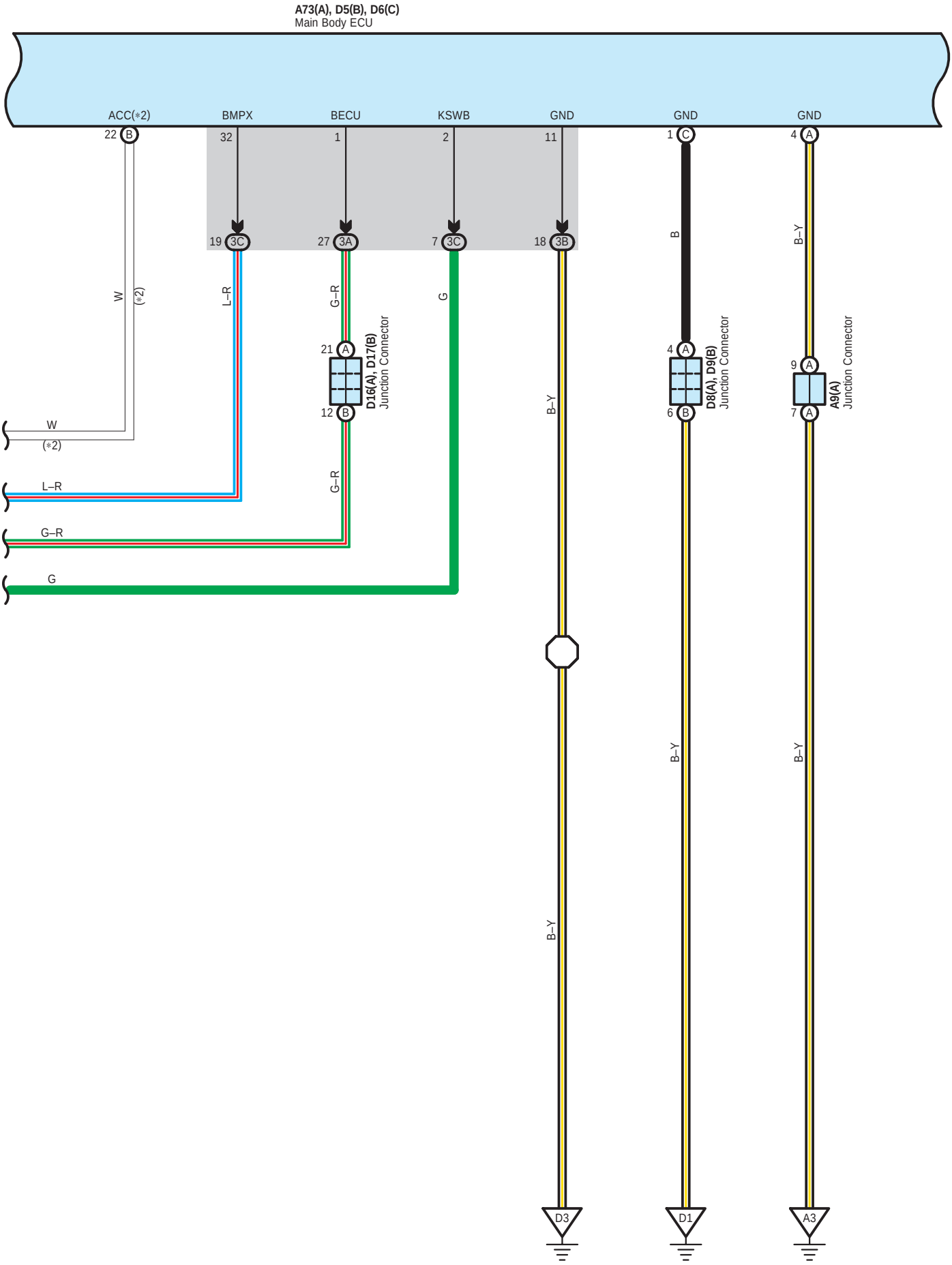
A73(A), D5(B), D6(C)
Main Body ECU
ACC(*2)
BMPX
BECU
KSWB
GND
GND
GND
22 B
32
1
2
11
1 C
4 A
19 3C
27 3A
7 3C
18 3B
W
(*2)
L–R
G–R
G
B
B–Y
21 A
12 B
D16(A), D17(B)
Junction Connector
4 A
6 B
D8(A), D9(B)
Junction Connector
9 A
7 A
A9(A)
Junction Connector
W
(*2)
L–R
G–R
G
D3
D1
A3

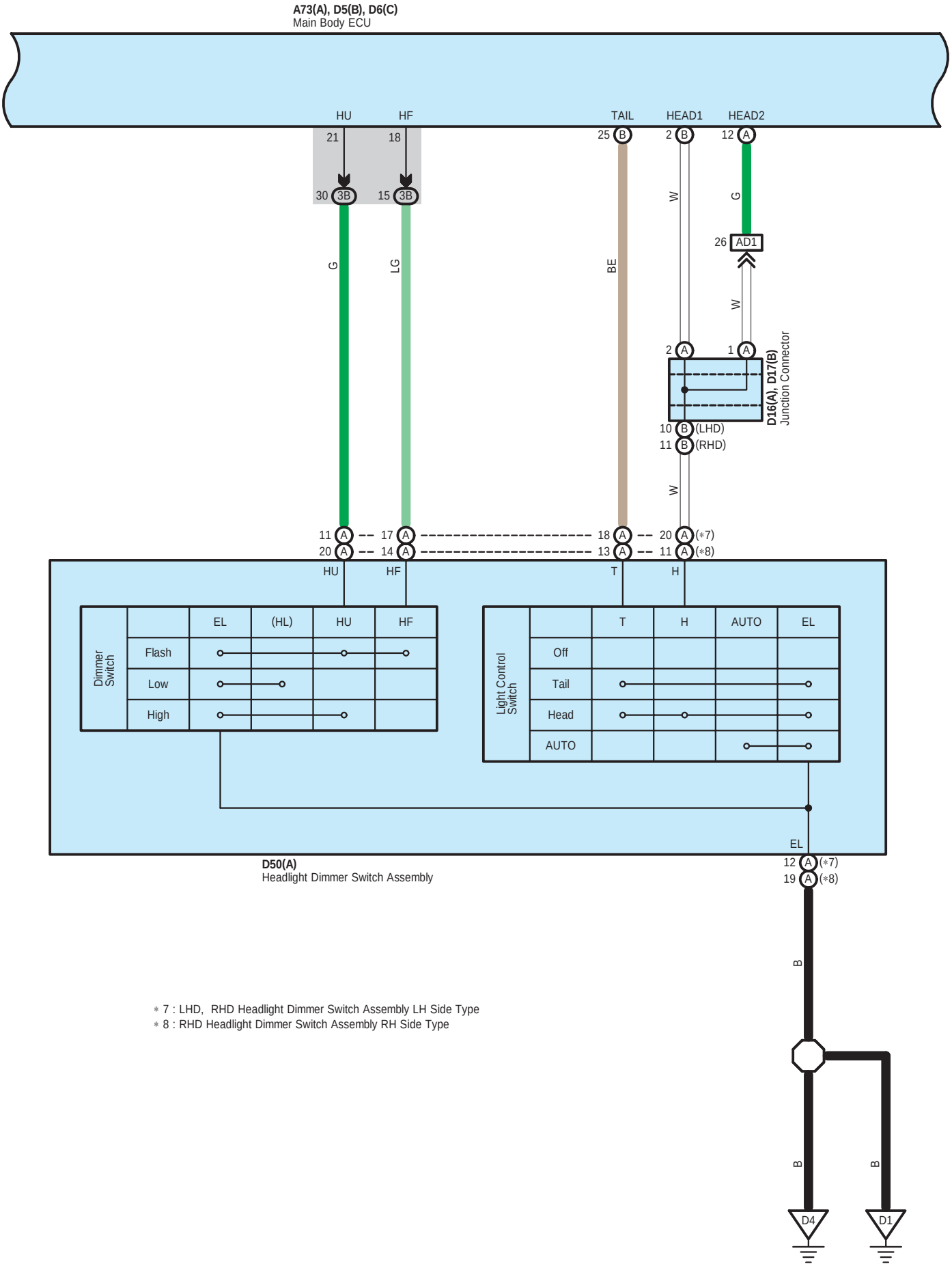

* 7 : LHD, RHD Headlight Dimmer Switch Assembly LH Side Type
* 8 : RHD Headlight Dimmer Switch Assembly RH Side Type

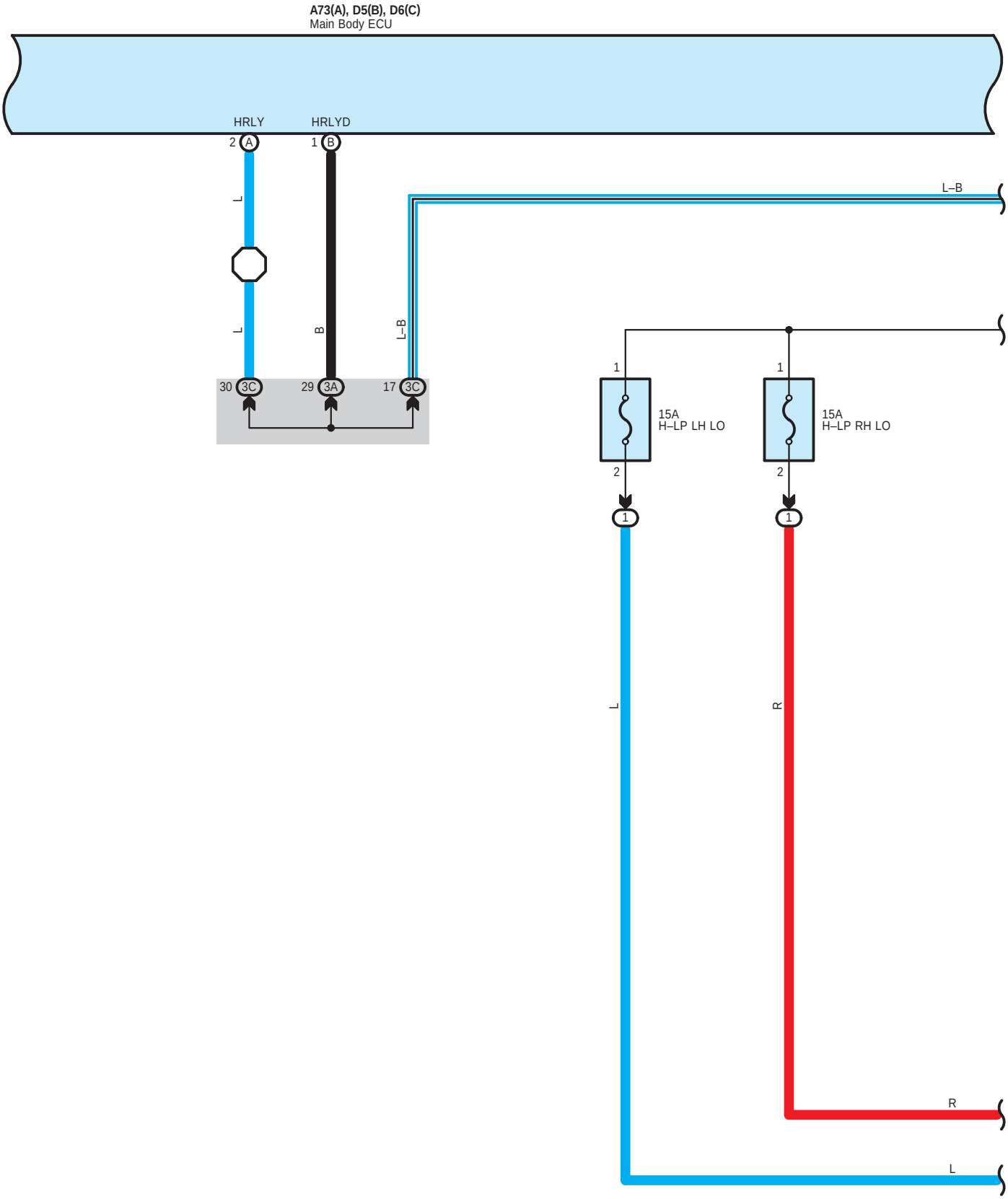
A73(A), D5(B), D6(C)
Main Body ECU
HRLY
HRLYD
2 A
1 B
L
L
B
L–B
30 3C
29 3A
17 3C
L–B
1
2
15A
H–LP LH LO
1
2
15A
H–LP RH LO
1
1
L
R
R
L

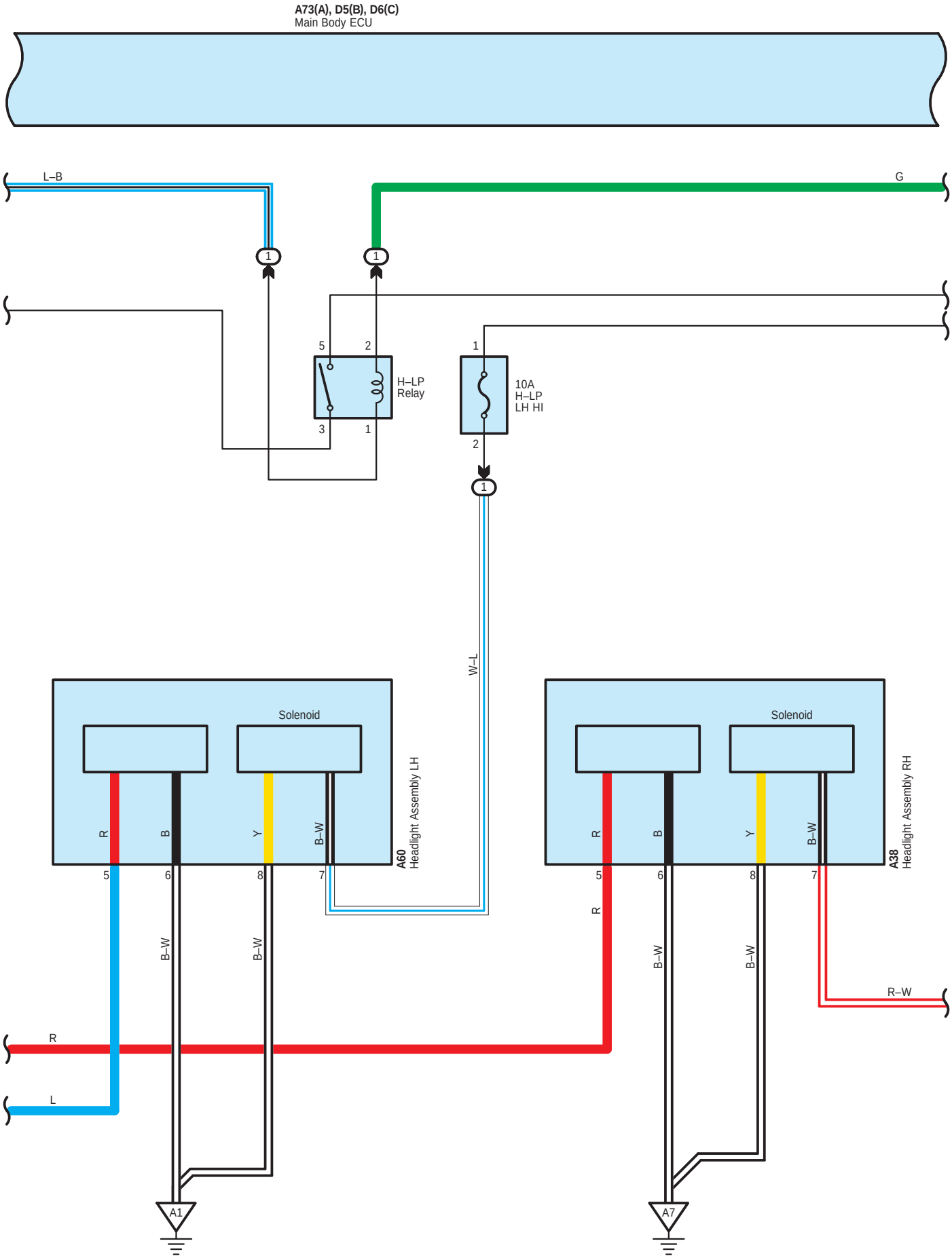
A73(A), D5(B), D6(C)
Main Body ECU
L–B
G
1
1
5
2
3
1
H–LP
Relay
1
10A
H–LP
LH HI
2
1
W–L
Solenoid
R
B
Y
B–W
A60
Headlight Assembly LH
5
6
8
7
Solenoid
R
B
Y
B–W
A38
Headlight Assembly RH
5
6
8
7
R
B–W
B–W
R
B–W
B–W
R–W
R
L
A1
A7

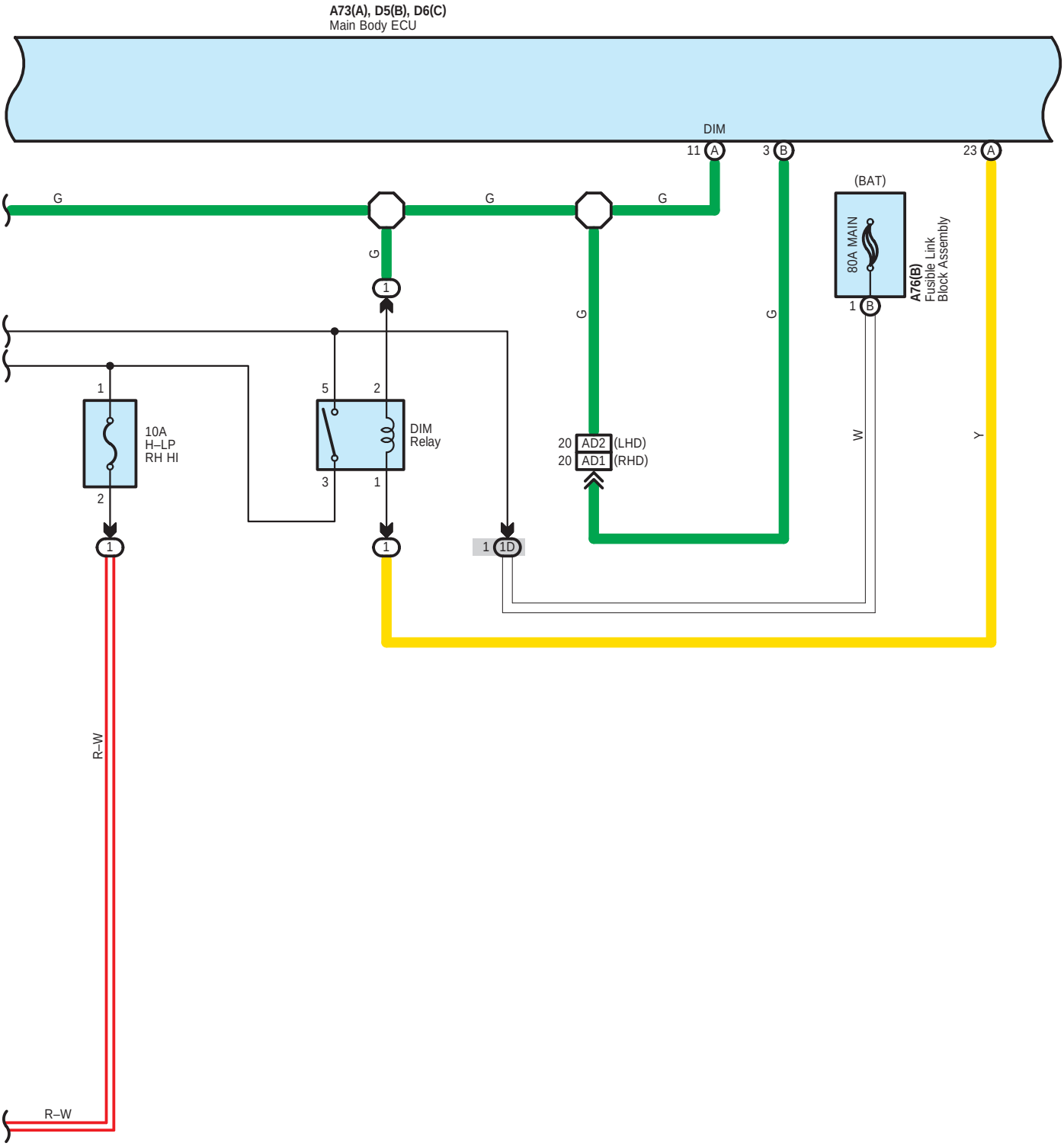
A73(A), D5(B), D6(C)
Main Body ECU
DIM
11 A
3 B
23 A
G
G
G
G
G
G
G
(BAT)
80A MAIN
A76(B)
Fusible Link
Block Assembly
1 B
1
1
5
2
3
1
10A
H–LP
RH HI
DIM
Relay
20 AD2 (LHD)
20 AD1 (RHD)
W
Y
1
1
1 1D
R–W
R–W

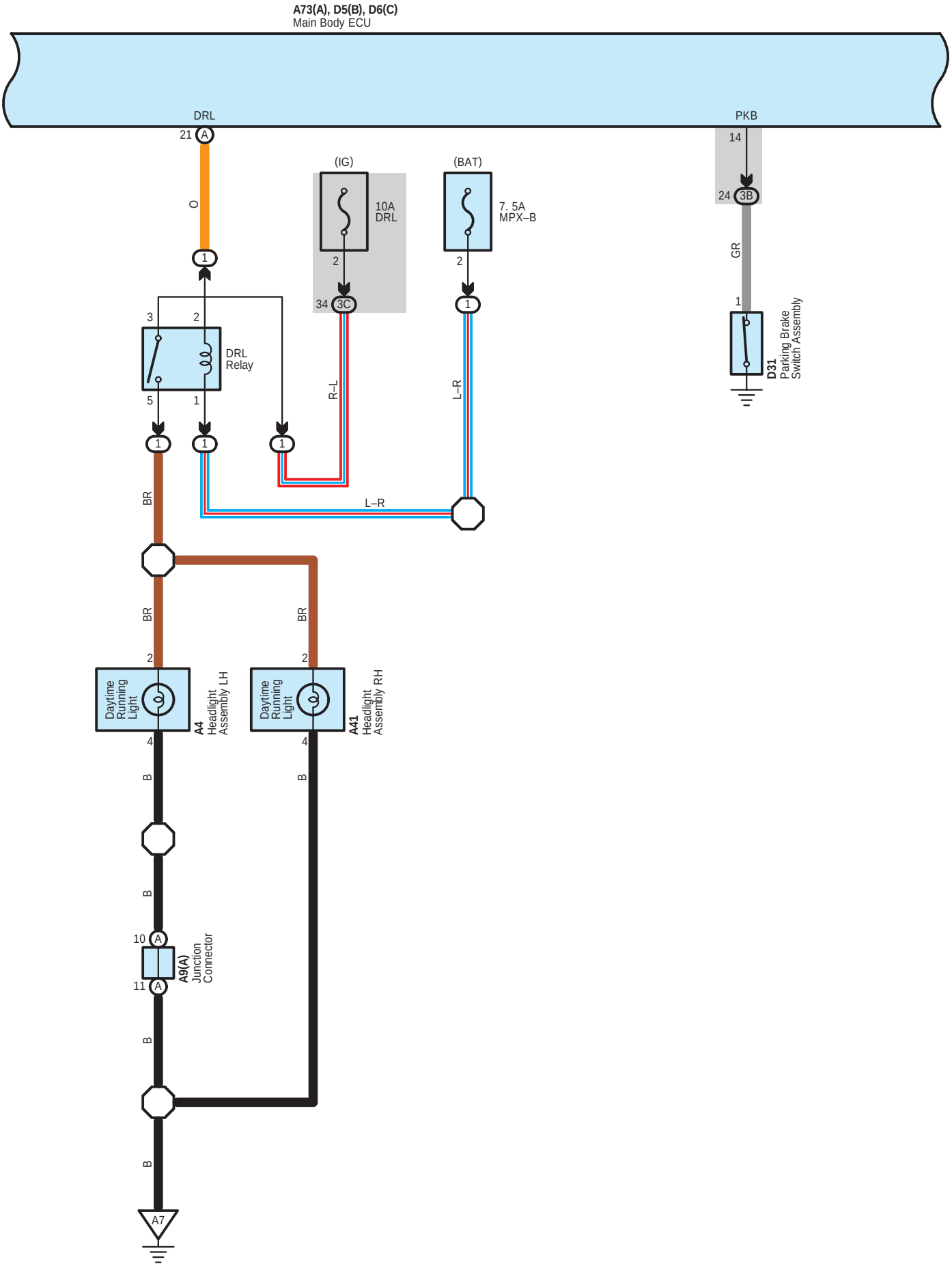
A73(A), D5(B), D6(C)
Main Body ECU
DRL
21 A
O
1
(IG)
10A
DRL
2
34 3C
(BAT)
7. 5A
MPX–B
2
1
PKB
14
24 3B
GR
1
D31
Parking Brake
Switch Assembly
3
2
DRL
Relay
5
1
R–L
L–R
1
1
1
L–R
BR
BR
BR
2
2
Daytime
Running
Light
A4
Headlight
Assembly LH
Daytime
Running
Light
A41
Headlight
Assembly RH
4
4
B
B
B
10 A
A9(A)
Junction
Connector
11 A
B
B
A7

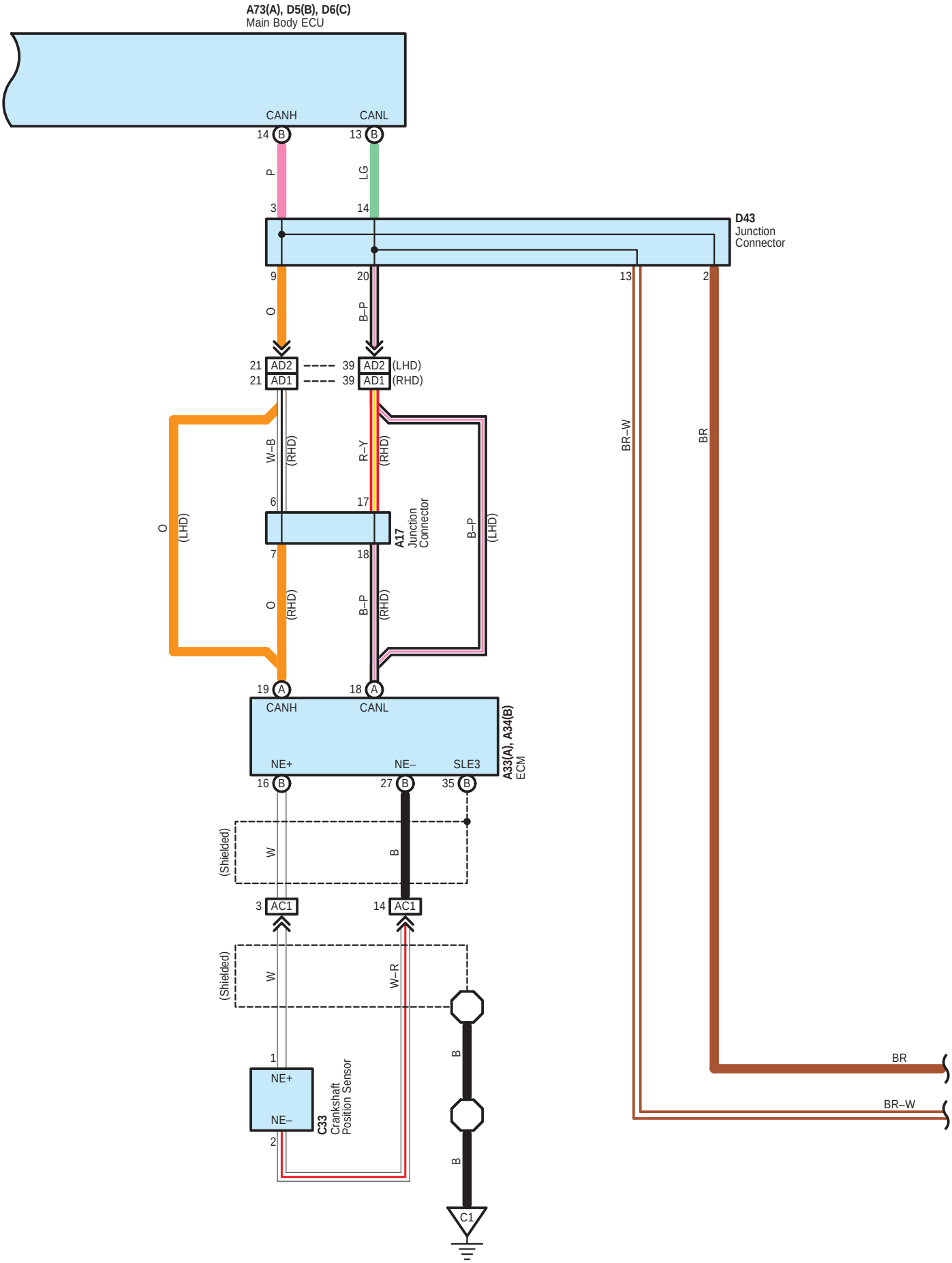
A73(A), D5(B), D6(C)
Main Body ECU
CANH
CANL
14 B
13 B
P
LG
3
14
D43
Junction
Connector
9
20
13
2
O
B–P
21 AD2
21 AD1
39 AD2 (LHD)
39 AD1 (RHD)
W–B (RHD)
R–Y (RHD)
BR–W
BR
6
17
A17
Junction
Connector
O (LHD)
B–P (LHD)
7
18
O (RHD)
B–P (RHD)
19 A
18 A
CANH
CANL
A33(A), A34(B)
ECM
NE+
NE–
SLE3
16 B
27 B
35 B
(Shielded)
W
B
3 AC1
14 AC1
(Shielded)
W
W–R
1
NE+
NE–
2
C33
Crankshaft
Position Sensor
B
B
C1
BR
BR–W

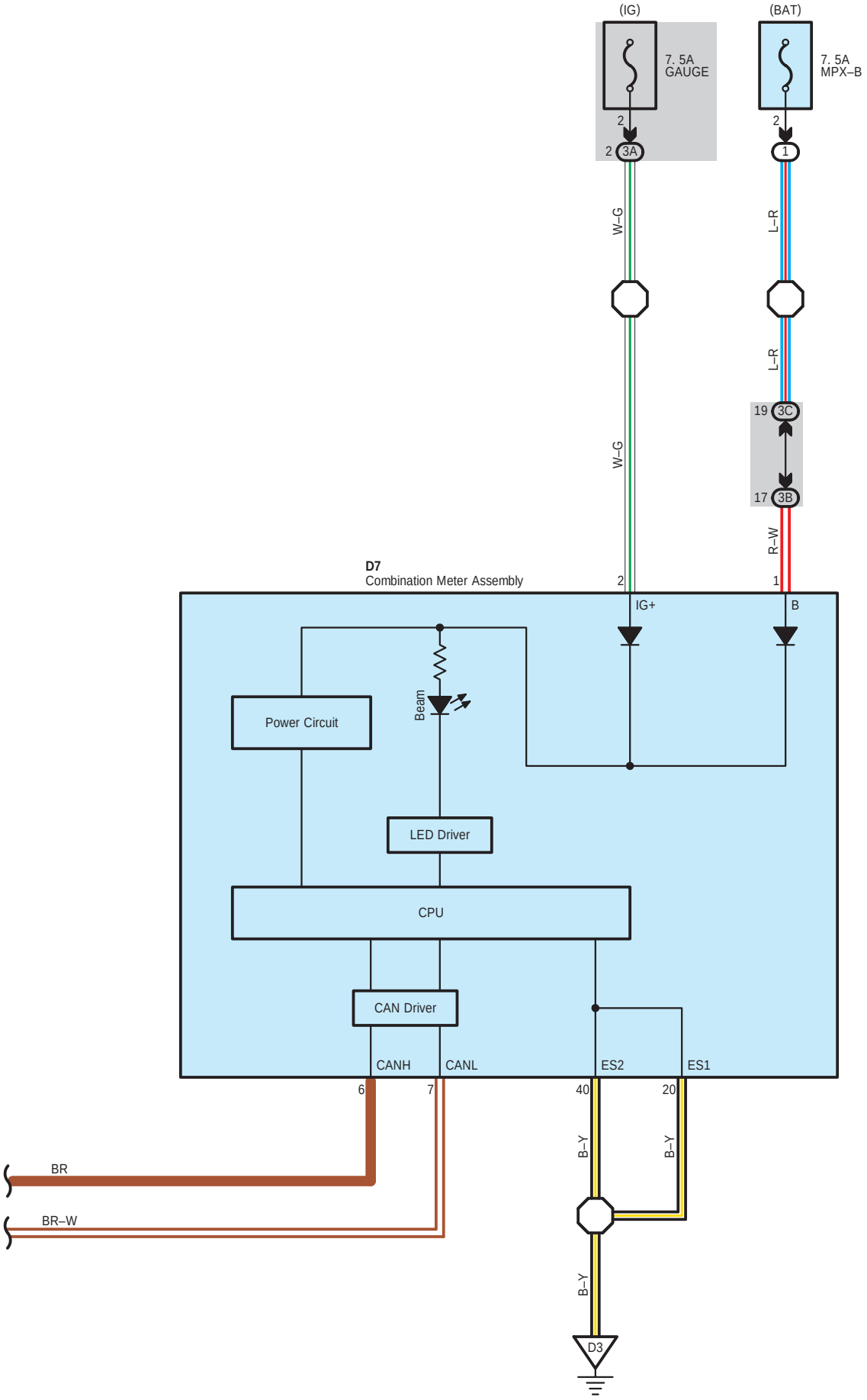
(IG)
(BAT)
7. 5A
GAUGE
7. 5A
MPX–B
2
2
2
3A
1
W–G
L–R
L–R
19
3C
17
3B
W–G
R–W
D7
Combination Meter Assembly
2
1
IG+
B
Beam
Power Circuit
LED Driver
CPU
CAN Driver
CANH
CANL
ES2
ES1
6
7
40
20
B–Y
B–Y
BR
BR–W
B–Y
D3

○ : Parts Location

Code		See Page	Code		See Page	Code		See Page
A4		39 (LHD)	A60		47 (RHD)	D8	A	48 (RHD)
		47 (RHD)	A73	A	42 (LHD)	D9	B	40 (LHD)
A9	A	42 (LHD)			50 (RHD)			48 (RHD)
		50 (RHD)	A76	B	39 (LHD)	D16	A	40 (LHD)
A17		50 (RHD)			47 (RHD)			48 (RHD)
A33	A	42 (LHD)	C33		38 (LHD)	D17	B	40 (LHD)
		50 (RHD)			46 (RHD)			48 (RHD)
A34	B	42 (LHD)	D5	B	40 (LHD)	D31		40 (LHD)
		50 (RHD)			48 (RHD)			48 (RHD)
A38		39 (LHD)	D6	C	40 (LHD)	D43		41 (LHD)
		47 (RHD)			48 (RHD)			49 (RHD)
A41		39 (LHD)	D7		40 (LHD)	D50	A	41 (LHD)
		47 (RHD)			48 (RHD)			49 (RHD)
A60		39 (LHD)	D8	A	40 (LHD)			

⬭ : Relay Blocks

Code	See Page	Relay Blocks (Relay Block Location)
1	24	Engine Room R/B (Engine Compartment Right)

⬭ : Junction Block and Wire Harness Connector

Code	See Page	Junction Block and Wire Harness (Connector Location)
1D	24	Engine Room Main Wire and Engine Room J/B (Engine Compartment Right)
3A	26	Instrument Panel Wire and Instrument Panel J/B Assembly (Instrument Panel Reinforcement)
3B		
3C	26	Engine Room Main Wire and Instrument Panel J/B Assembly (Instrument Panel Reinforcement)

▭ : Connector Joining Wire Harness and Wire Harness

Code	See Page	Joining Wire Harness and Wire Harness (Connector Location)
AC1	54 (LHD)	Engine Room Main Wire and Engine Wire (Engine Unit)
	58 (RHD)	
AD1	55 (LHD)	Engine Room Main Wire and Instrument Panel Wire (Cowl Side Panel RH)
	59 (RHD)	
AD2	55 (LHD)	Engine Room Main Wire and Instrument Panel Wire (Instrument Panel Reinforcement)

▽ : Ground Points

Code	See Page	Ground Points Location
A1	54 (LHD)	Front Fender Apron LH
	58 (RHD)	
A3	55 (LHD)	Cowl Side Panel RH
	59 (RHD)	Cowl Side Panel LH
A7	54 (LHD)	Front Fender Apron RH
	58 (RHD)	
C1	54 (LHD)	Engine Unit
	58 (RHD)	
D1	55 (LHD)	Cowl Side Panel LH
	59 (RHD)	Cowl Side Panel RH
D3	55 (LHD)	Instrument Panel Brace RH
	59 (RHD)	Instrument Panel Brace LH
D4	55 (LHD)	Cowl Side Panel RH
	59 (RHD)	Cowl Side Panel LH

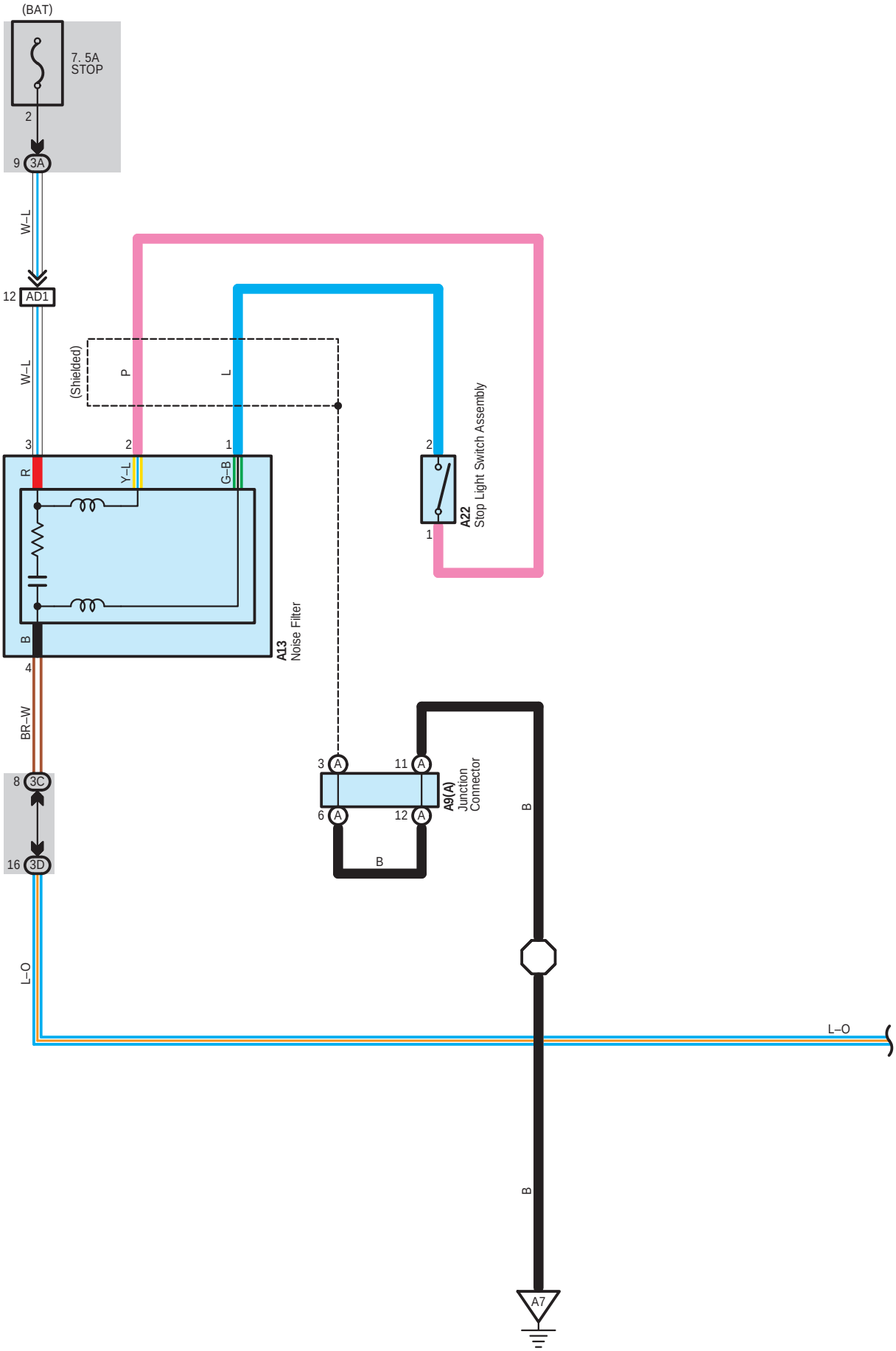
(BAT)
7. 5A
STOP
2
9
3A
W–L
12
AD1
W–L
(Shielded)
P
L
3
2
1
R
Y–L
G–B
B
4
A13
Noise Filter
2
1
A22
Stop Light Switch Assembly
BR–W
8
3C
16
3D
3
A
11
A
6
A
12
A
A9(A)
Junction
Connector
B
B
L–O
L–O
B
A7

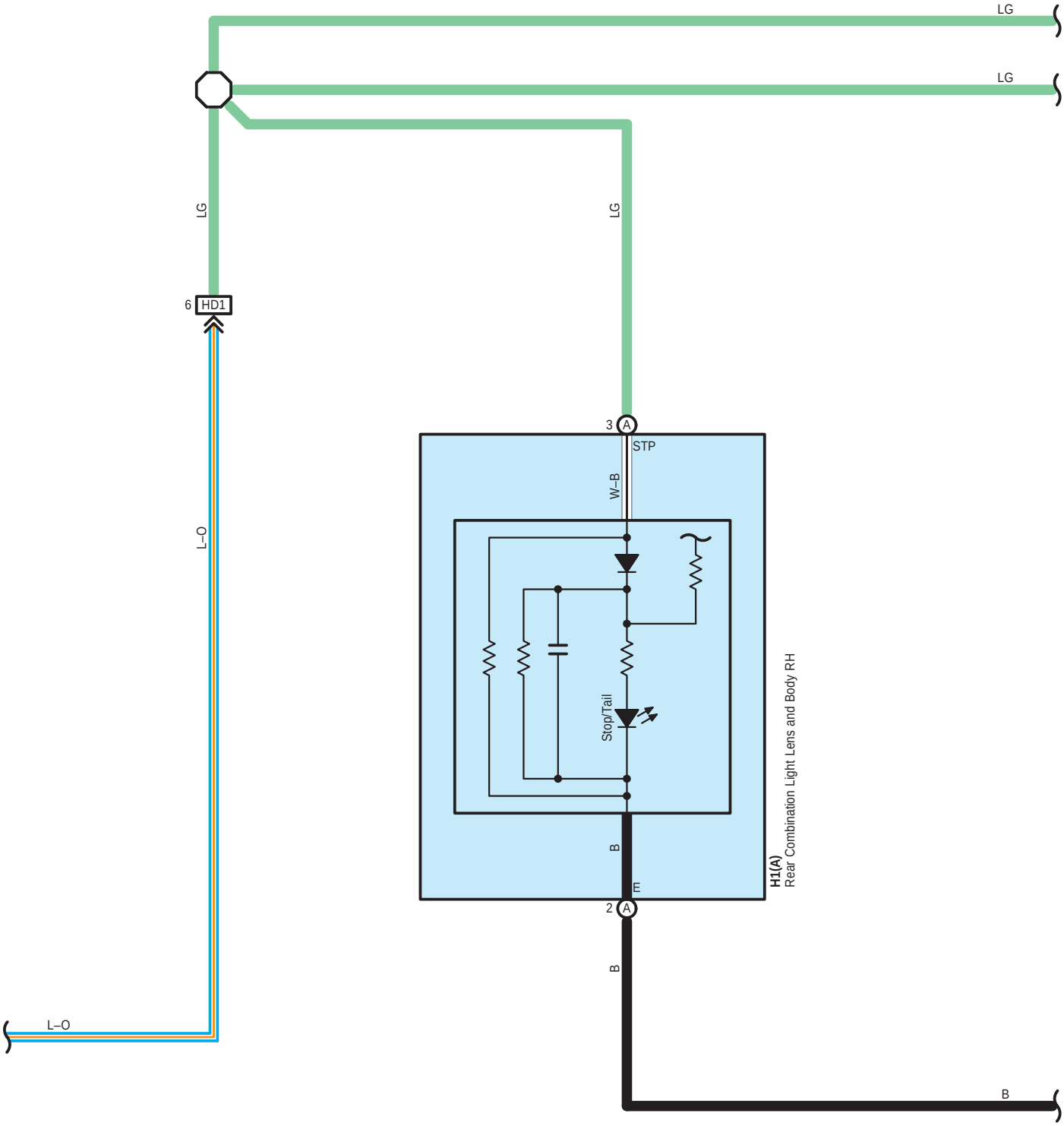
LG
LG
LG
LG
6
HD1
L–O
L–O
3
A
STP
W–B
Stop/Tail
B
E
2
A
B
B
H1(A)
Rear Combination Light Lens and Body RH

Stop Light

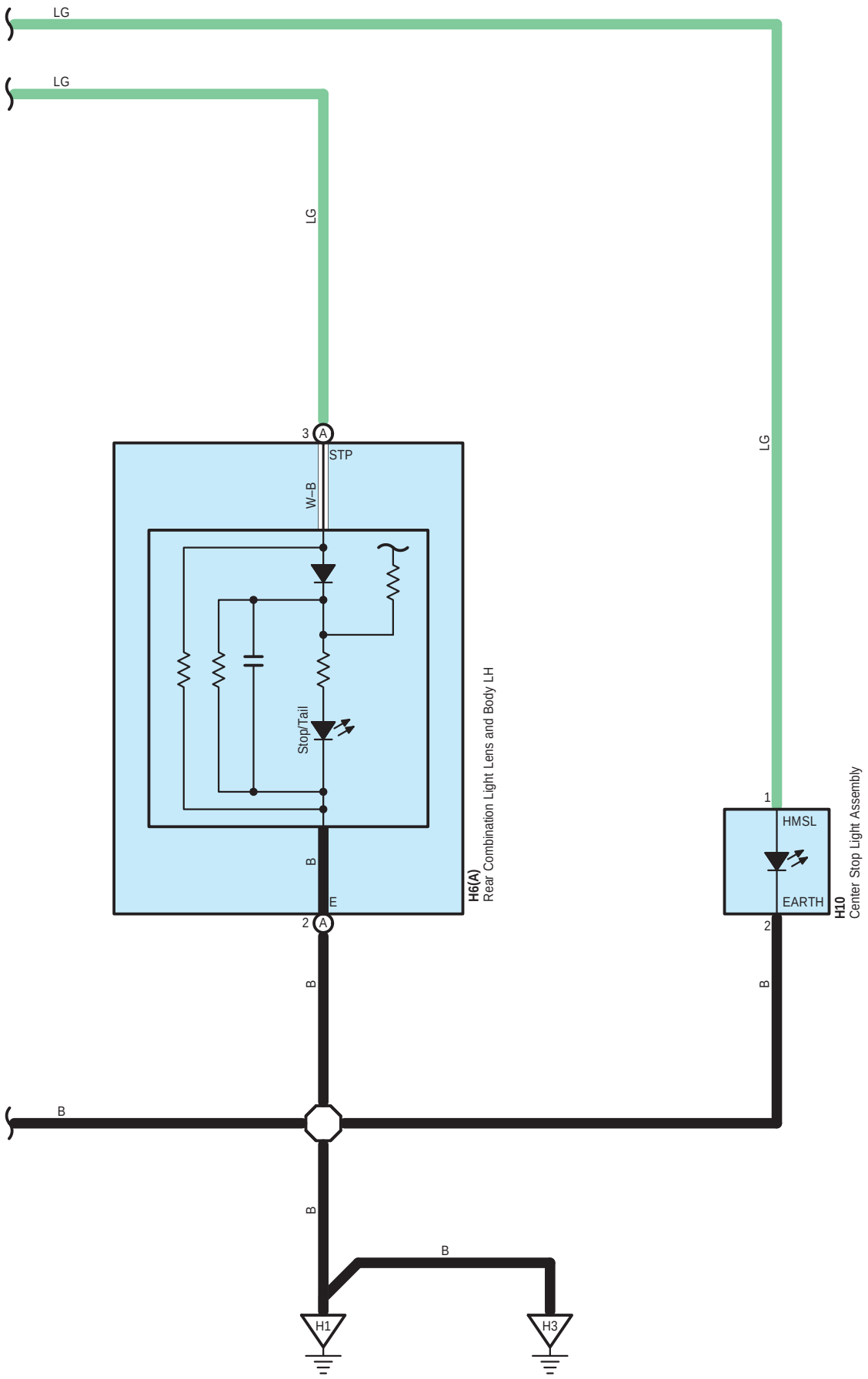
LG
LG
LG
LG
3
A
STP
W–B
Stop/Tail
B
E
2
A
H6(A)
Rear Combination Light Lens and Body LH
1
HMSL
EARTH
2
H10
Center Stop Light Assembly
B
B
B
B
B
H1
H3

○ : **Parts Location**

Code		See Page	Code		See Page	Code		See Page
A9	A	42 (LHD)	A22		42 (LHD)	H6	A	45 (LHD)
		50 (RHD)			50 (RHD)			53 (RHD)
A13		42 (LHD)	H1	A	45 (LHD)	H10		45 (LHD)
		50 (RHD)			53 (RHD)			53 (RHD)

: **Junction Block and Wire Harness Connector**

Code	See Page	Junction Block and Wire Harness (Connector Location)
3A	26	Instrument Panel Wire and Instrument Panel J/B Assembly (Instrument Panel Reinforcement)
3C	26	Engine Room Main Wire and Instrument Panel J/B Assembly (Instrument Panel Reinforcement)
3D	26	Instrument Panel Wire and Instrument Panel J/B Assembly (Instrument Panel Reinforcement)

▭ : **Connector Joining Wire Harness and Wire Harness**

Code	See Page	Joining Wire Harness and Wire Harness (Connector Location)
AD1	55 (LHD)	Engine Room Main Wire and Instrument Panel Wire (Cowl Side Panel RH)
	59 (RHD)	
HD1	55 (LHD)	No. 2 Floor Wire and Instrument Panel Wire (Cowl Side Panel LH)
	59 (RHD)	

▽ : **Ground Points**

Code	See Page	Ground Points Location
A7	54 (LHD)	Front Fender Apron RH
	58 (RHD)	
H1	56 (LHD)	Lower Back Panel
	60 (RHD)	
H3	56 (LHD)	Quarter Wheel House Panel LH
	60 (RHD)	

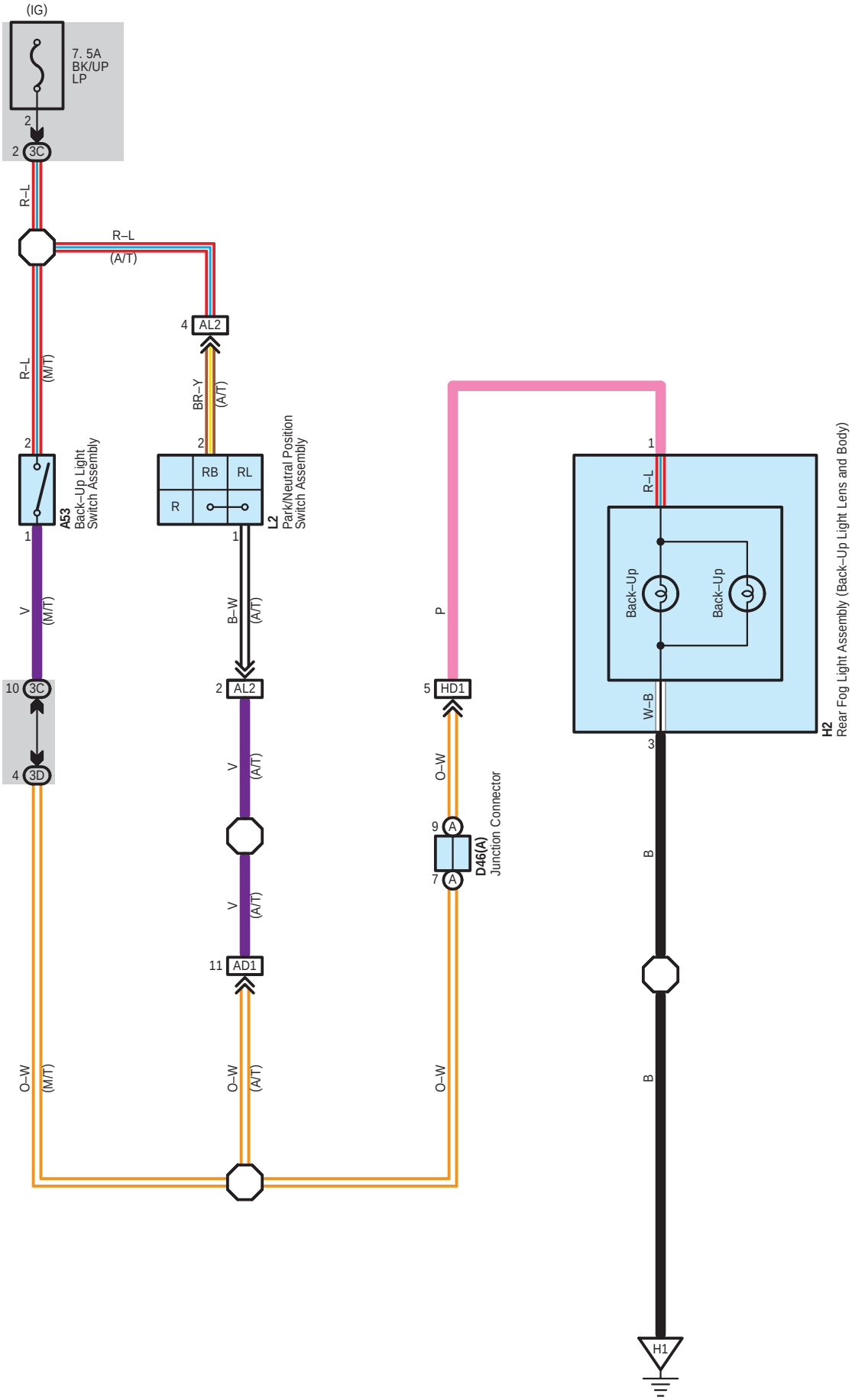
(IG)
7. 5A
BK/UP
LP
2
2 3C
R–L
R–L
(A/T)
4 AL2
R–L
(M/T)
BR–Y
(A/T)
2
A53
Back–Up Light
Switch Assembly
1
2
RB
RL
R
L2
Park/Neutral Position
Switch Assembly
1
V
(M/T)
B–W
(A/T)
10 3C
4 3D
2 AL2
V
(A/T)
V
(A/T)
11 AD1
O–W
(M/T)
O–W
(A/T)
5 HD1
P
O–W
9 A
7 A
D46(A)
Junction Connector
O–W
1
R–L
Back–Up
Back–Up
W–B
3
H2
Rear Fog Light Assembly (Back–Up Light Lens and Body)
B
B
H1

○ : **Parts Location**

Code	See Page	Code	See Page	Code	See Page
A53	39 (LHD)	D46 A	49 (RHD)	L2	39 (LHD)
	47 (RHD)	H2	45 (LHD)		47 (RHD)
D46 A	41 (LHD)		53 (RHD)		

Junction Block and Wire Harness Connector

Code	See Page	Junction Block and Wire Harness (Connector Location)
3C	26	Engine Room Main Wire and Instrument Panel J/B Assembly (Instrument Panel Reinforcement)
3D	26	Instrument Panel Wire and Instrument Panel J/B Assembly (Instrument Panel Reinforcement)

▭ : **Connector Joining Wire Harness and Wire Harness**

Code	See Page	Joining Wire Harness and Wire Harness (Connector Location)
AD1	55 (LHD)	Engine Room Main Wire and Instrument Panel Wire (Cowl Side Panel RH)
	59 (RHD)	
AL2	54 (LHD)	Engine Room Main Wire and Transmission Wire (Dash Panel)
	58 (RHD)	
HD1	55 (LHD)	No. 2 Floor Wire and Instrument Panel Wire (Cowl Side Panel LH)
	59 (RHD)	

▽ : **Ground Points**

Code	See Page	Ground Points Location
H1	56 (LHD)	Lower Back Panel
	60 (RHD)	

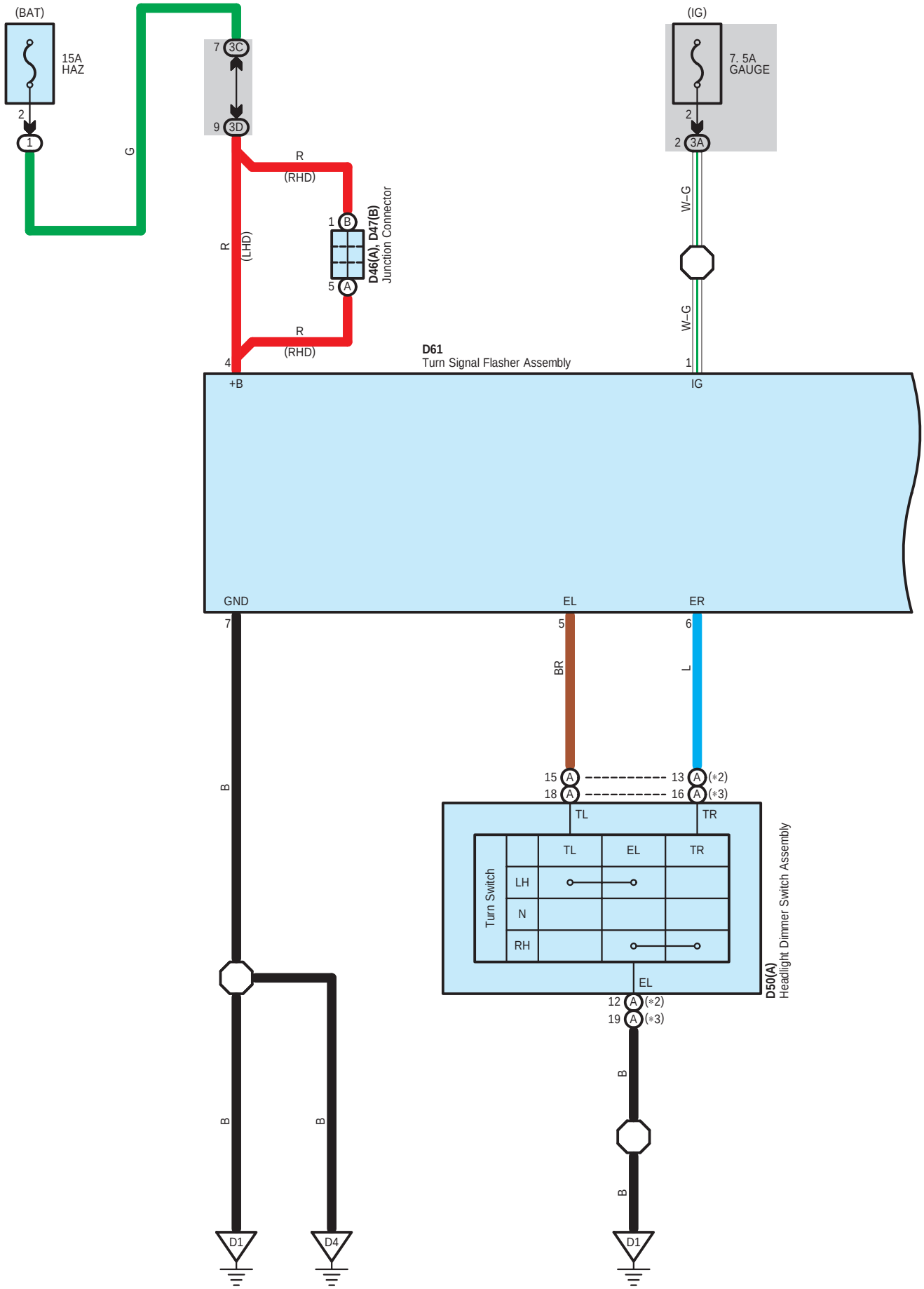
(BAT)
15A
HAZ
2
1
G
7 3C
9 3D
R
(RHD)
R
(LHD)
1 B
5 A
D46(A), D47(B)
Junction Connector
R
(RHD)
4
+B
(IG)
7. 5A
GAUGE
2
2 3A
W–G
W–G
1
IG
D61
Turn Signal Flasher Assembly
GND
EL
ER
7
5
6
BR
L
B
15 A
18 A
13 A (*2)
16 A (*3)
TL
TR
Turn Switch
TL
EL
TR
LH
N
RH
EL
12 A (*2)
19 A (*3)
D50(A)
Headlight Dimmer Switch Assembly
B
B
B
B
B
D1
D4
D1

＊2 : LHD, RHD Headlight Dimmer Switch Assembly LH Side Type
＊3 : RHD Headlight Dimmer Switch Assembly RH Side Type

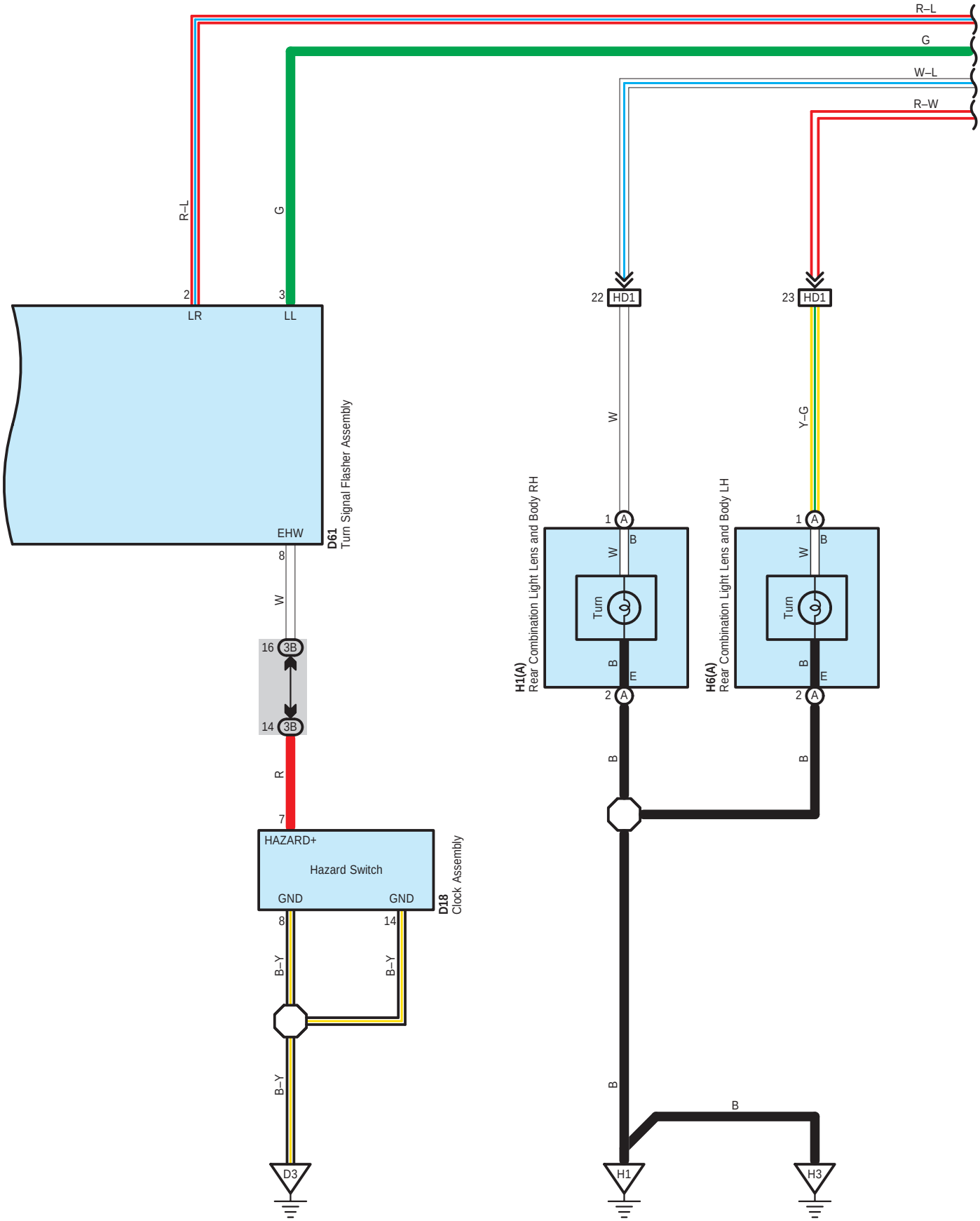

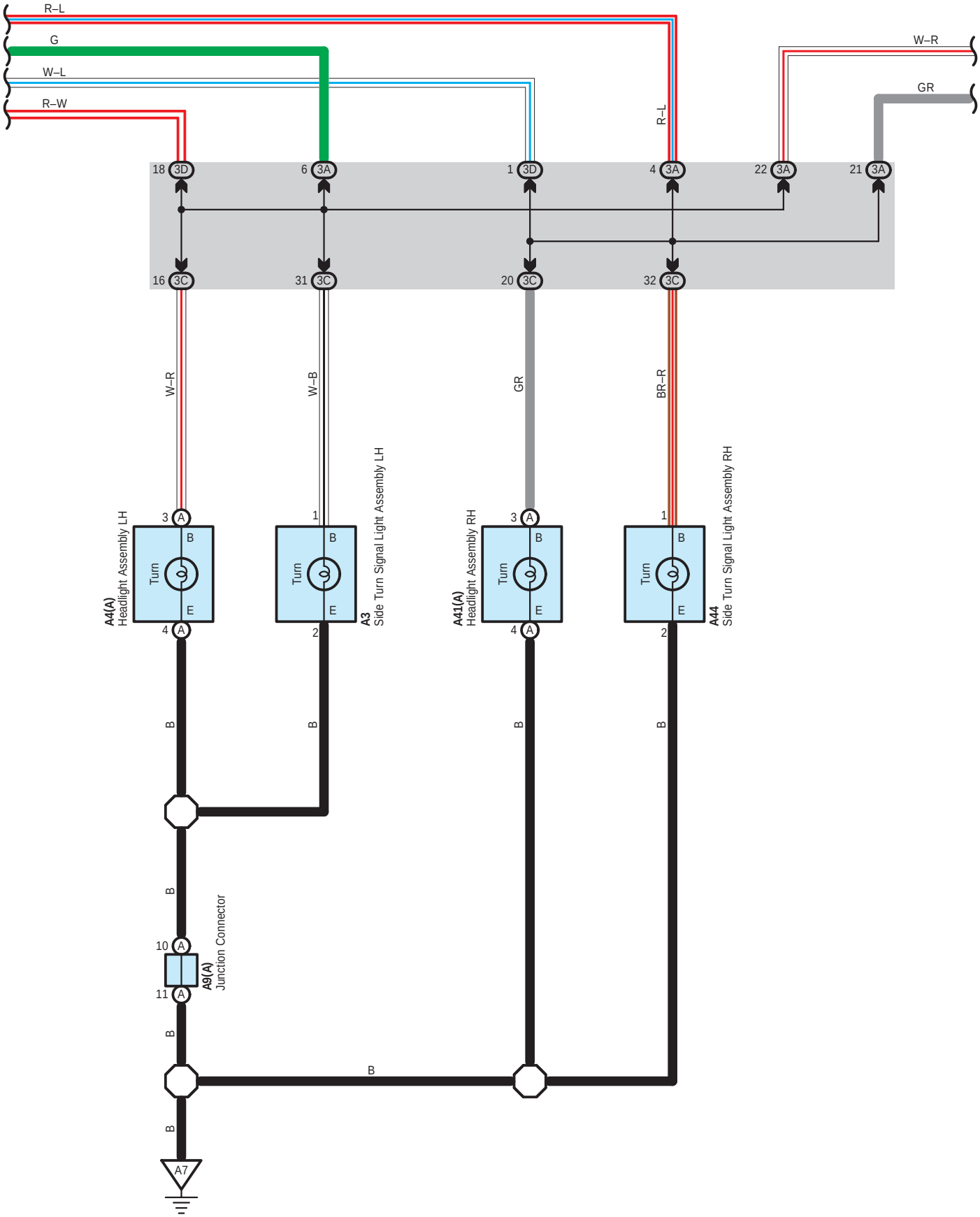
R–L
G
W–L
R–W
W–R
GR
R–L
18 3D
6 3A
1 3D
4 3A
22 3A
21 3A
16 3C
31 3C
20 3C
32 3C
W–R
W–B
GR
BR–R
A4(A)
Headlight Assembly LH
A3
Side Turn Signal Light Assembly LH
A41(A)
Headlight Assembly RH
A44
Side Turn Signal Light Assembly RH
Turn
B
E
A9(A)
Junction Connector
10 A
11 A
A7

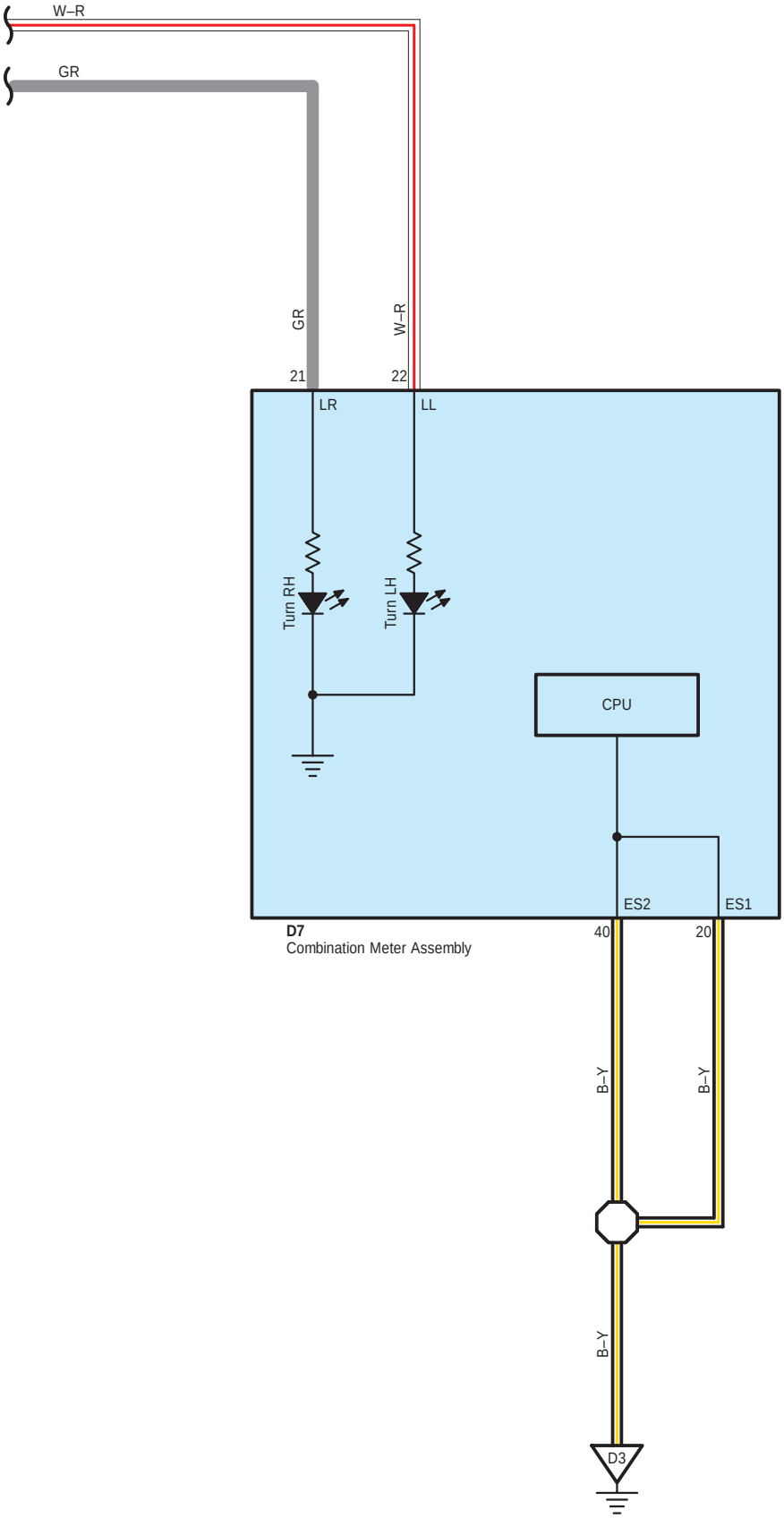
W–R
GR
GR
W–R
21
22
LR
LL
Turn RH
Turn LH
CPU
ES2
ES1
D7
Combination Meter Assembly
40
20
B–Y
B–Y
B–Y
D3

Turn Signal and Hazard Warning Light

: Parts Location

Code		See Page	Code		See Page	Code		See Page
A3		39 (LHD)	A44		39 (LHD)	D50	A	41 (LHD)
		47 (RHD)			47 (RHD)			49 (RHD)
A4	A	39 (LHD)	D7		40 (LHD)	D61		41 (LHD)
		47 (RHD)			48 (RHD)			49 (RHD)
A9	A	42 (LHD)	D18		40 (LHD)	H1	A	45 (LHD)
		50 (RHD)			48 (RHD)			53 (RHD)
A41	A	39 (LHD)	D46	A	49 (RHD)	H6	A	45 (LHD)
		47 (RHD)	D47	B	41 (LHD)			53 (RHD)

: Relay Blocks

Code	See Page	Relay Blocks (Relay Block Location)
1	24	Engine Room R/B (Engine Compartment Right)

: Junction Block and Wire Harness Connector

Code	See Page	Junction Block and Wire Harness (Connector Location)
3A	26	Instrument Panel Wire and Instrument Panel J/B Assembly (Instrument Panel Reinforcement)
3B		
3C	26	Engine Room Main Wire and Instrument Panel J/B Assembly (Instrument Panel Reinforcement)
3D	26	Instrument Panel Wire and Instrument Panel J/B Assembly (Instrument Panel Reinforcement)

: Connector Joining Wire Harness and Wire Harness

Code	See Page	Joining Wire Harness and Wire Harness (Connector Location)
HD1	55 (LHD)	No. 2 Floor Wire and Instrument Panel Wire (Cowl Side Panel LH)
	59 (RHD)	

: Ground Points

Code	See Page	Ground Points Location
A7	54 (LHD)	Front Fender Apron RH
	58 (RHD)	
D1	55 (LHD)	Cowl Side Panel LH
	59 (RHD)	Cowl Side Panel RH
D3	55 (LHD)	Instrument Panel Brace RH
	59 (RHD)	Instrument Panel Brace LH
D4	55 (LHD)	Cowl Side Panel RH
	59 (RHD)	Cowl Side Panel LH
H1	56 (LHD)	Lower Back Panel
	60 (RHD)	
H3	56 (LHD)	Quarter Wheel House Panel LH
	60 (RHD)	

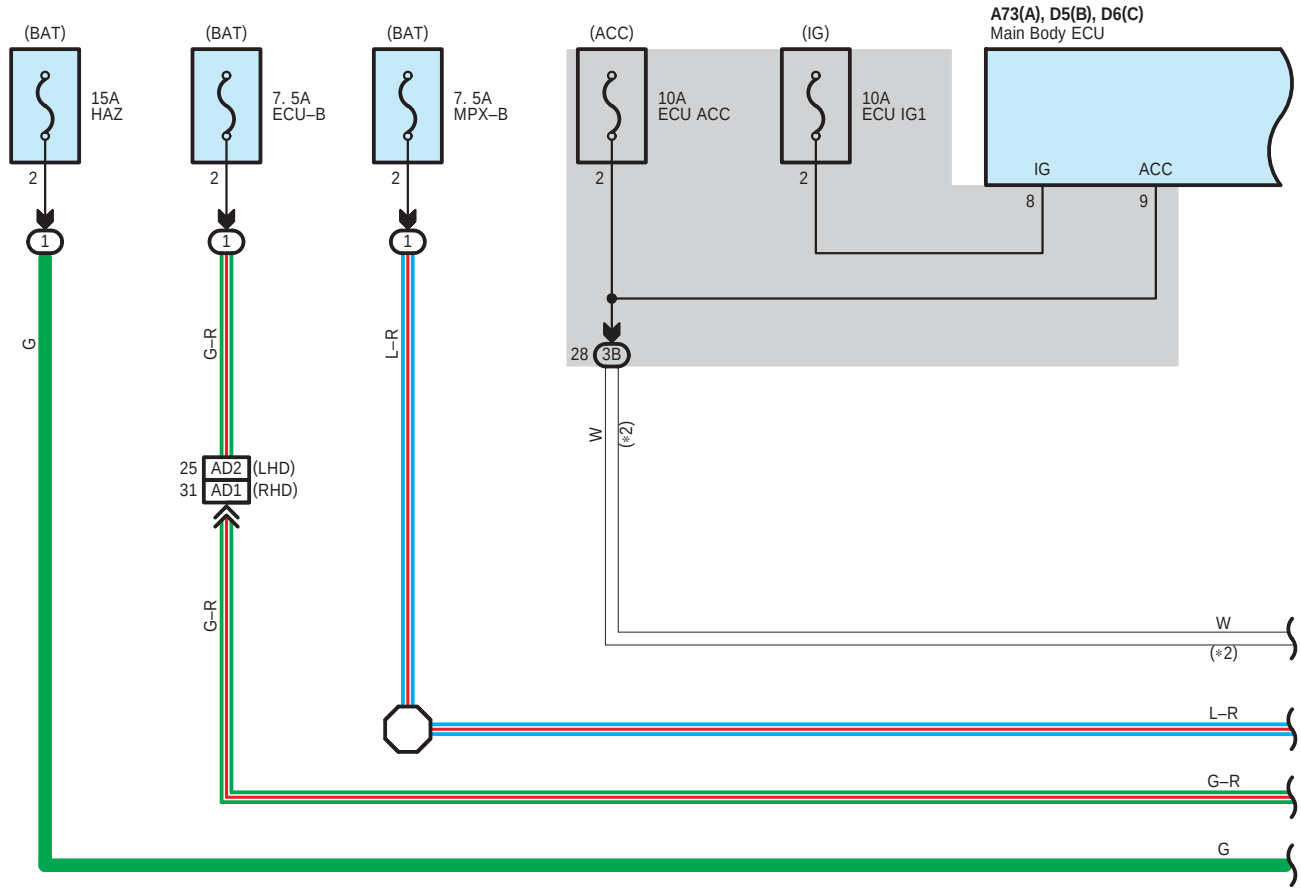

* 2 : w/ Entry & Start System

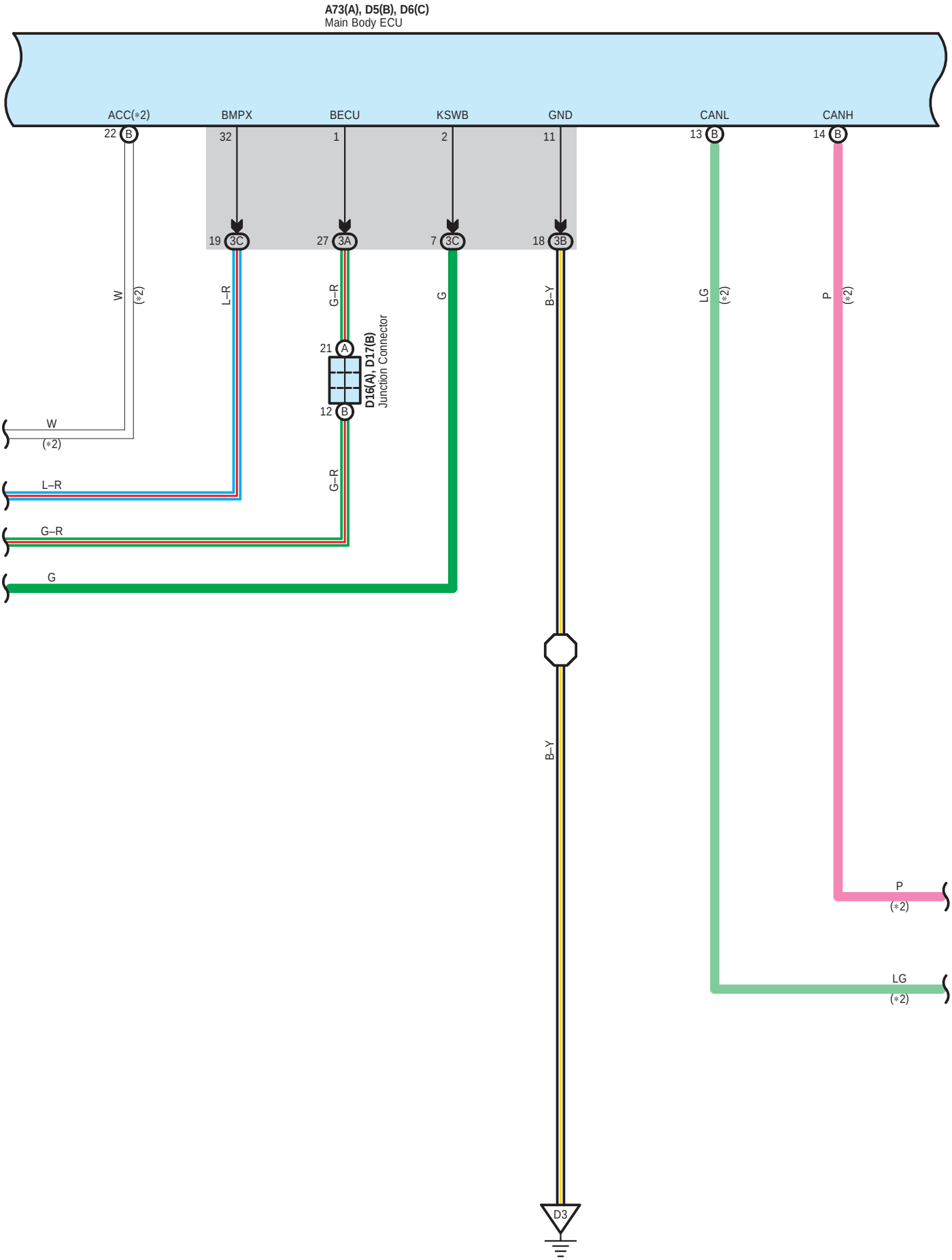
A73(A), D5(B), D6(C)
Main Body ECU
ACC(*2)
BMPX
BECU
KSWB
GND
CANL
CANH
22 B
32
1
2
11
13 B
14 B
19 3C
27 3A
7 3C
18 3B
W
(*2)
L–R
G–R
G
B–Y
LG
(*2)
P
(*2)
21 A
12 B
D16(A), D17(B)
Junction Connector
W
(*2)
L–R
G–R
G
B–Y
P
(*2)
LG
(*2)
D3

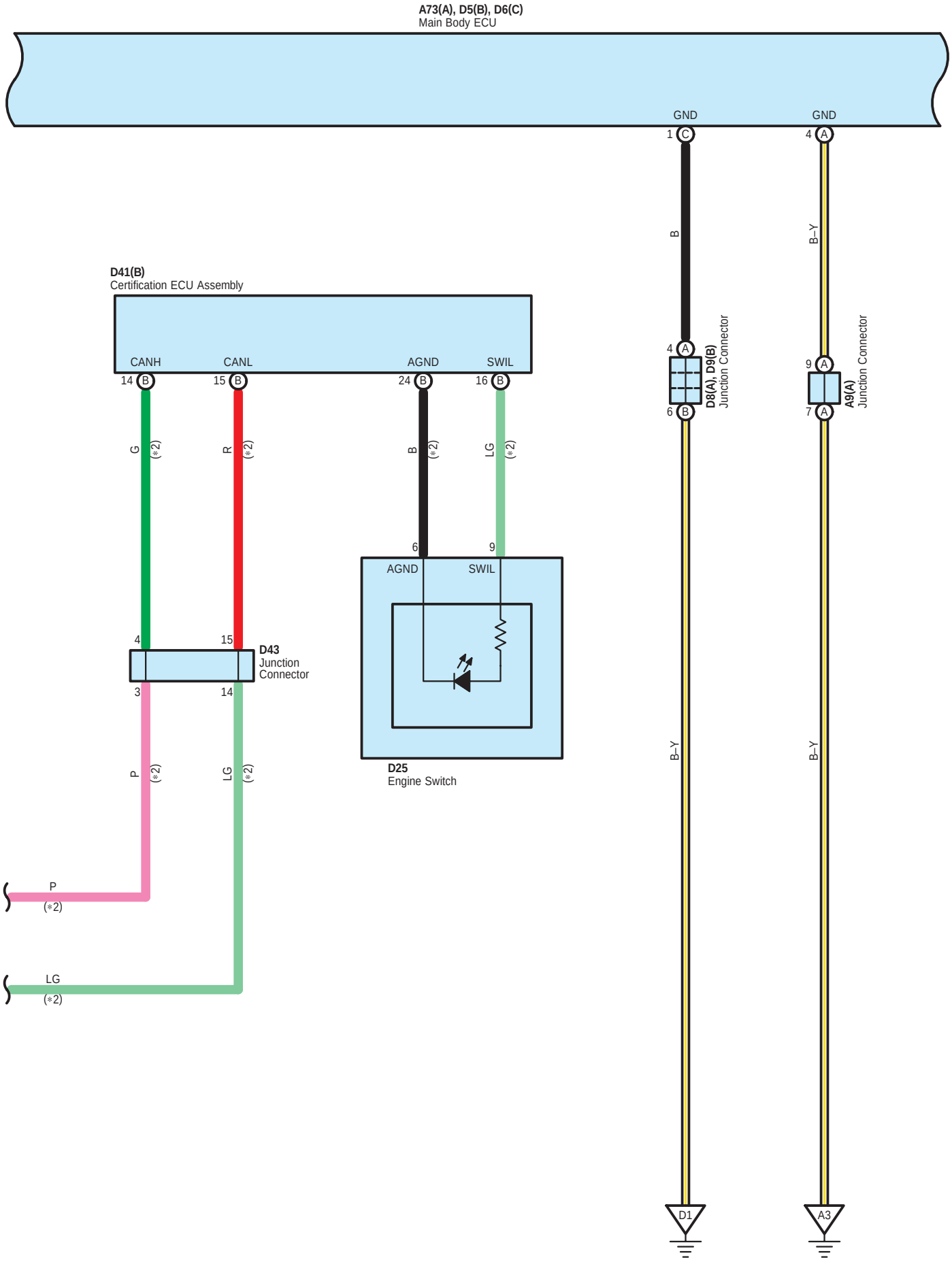
A73(A), D5(B), D6(C)
Main Body ECU
GND
1 C
4 A
B
B–Y
D41(B)
Certification ECU Assembly
CANH
CANL
AGND
SWIL
14 B
15 B
24 B
16 B
G
(*2)
R
(*2)
B
(*2)
LG
(*2)
4 A
6 B
D8(A), D9(B)
Junction Connector
9 A
7 A
A9(A)
Junction Connector
6
9
AGND
SWIL
4
15
D43
Junction
Connector
3
14
D25
Engine Switch
P
(*2)
LG
(*2)
P
(*2)
LG
(*2)
B–Y
B–Y
D1
A3

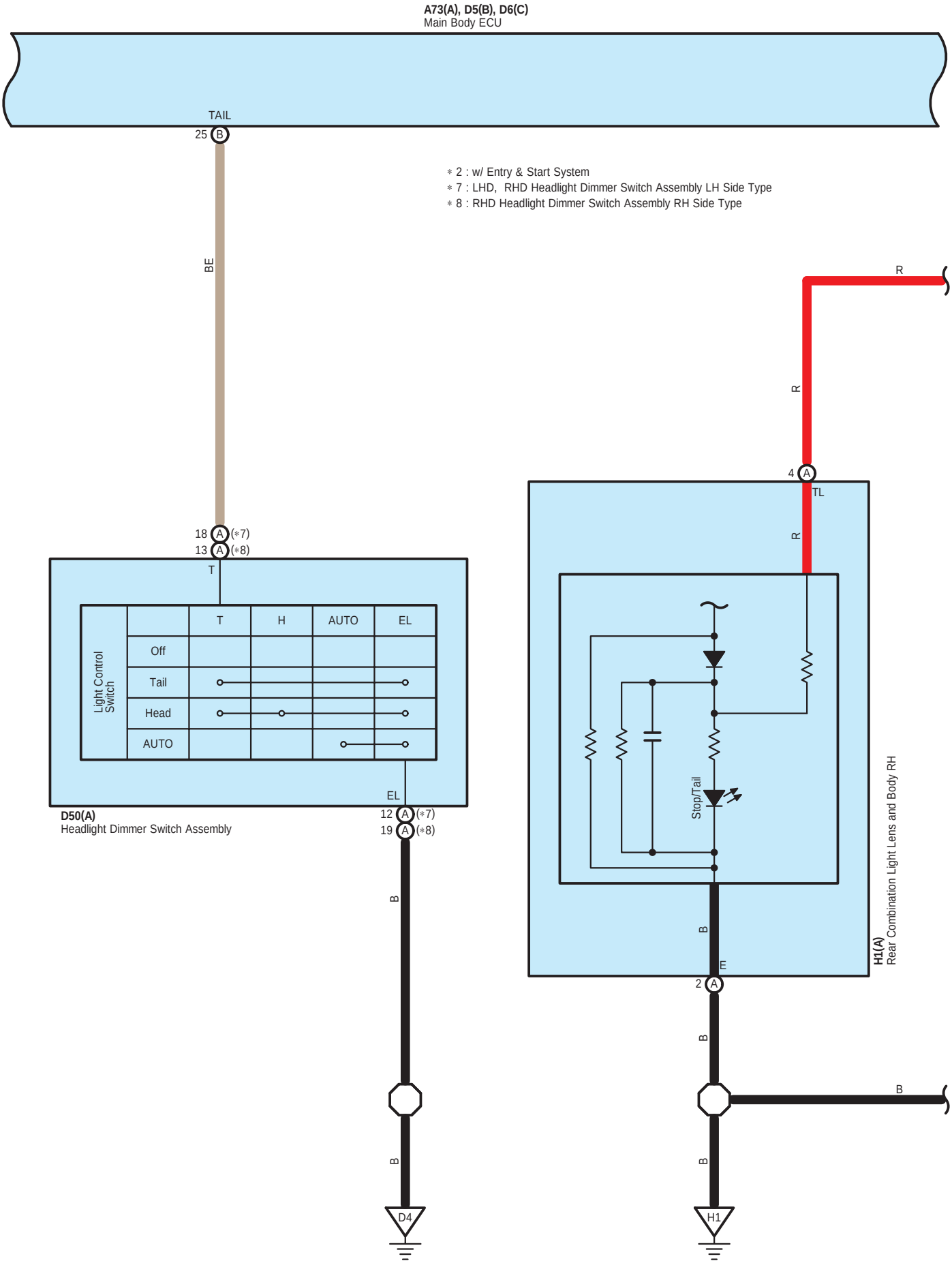
A73(A), D5(B), D6(C)
Main Body ECU
TAIL
25 B
∗ 2 : w/ Entry & Start System
∗ 7 : LHD, RHD Headlight Dimmer Switch Assembly LH Side Type
∗ 8 : RHD Headlight Dimmer Switch Assembly RH Side Type
BE
R
R
4 A
TL
R
18 A (∗7)
13 A (∗8)
T
Light Control Switch
T
H
AUTO
EL
Off
Tail
Head
AUTO
EL
D50(A)
Headlight Dimmer Switch Assembly
12 A (∗7)
19 A (∗8)
B
Stop/Tail
B
E
2 A
H1(A)
Rear Combination Light Lens and Body RH
B
B
B
B
D4
H1

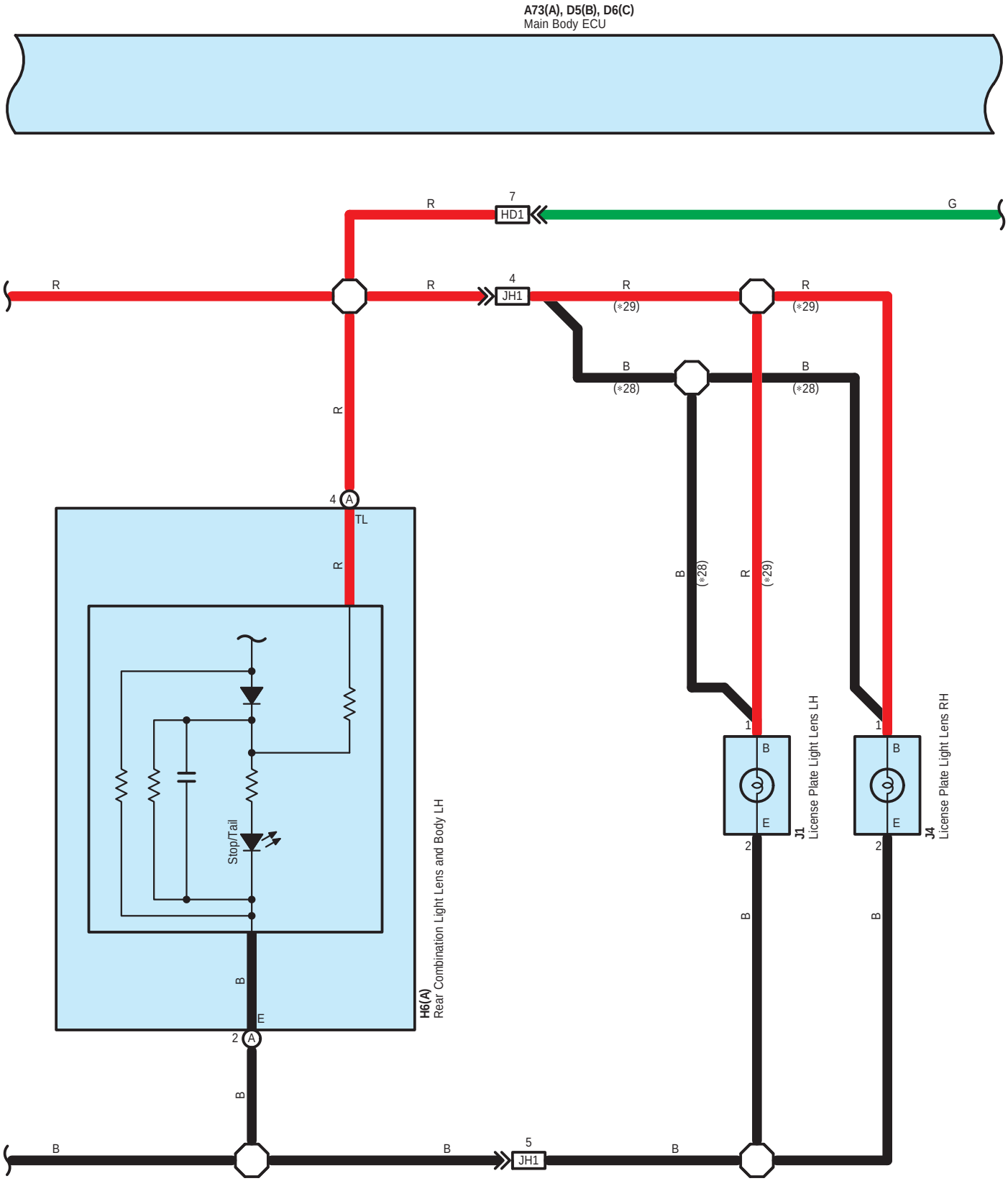
A73(A), D5(B), D6(C)
Main Body ECU
7
HD1
G
R
4
JH1
R
(*29)
B
(*28)
4
A
TL
Stop/Tail
B
E
2
A
H6(A)
Rear Combination Light Lens and Body LH
1
B
E
2
J1
License Plate Light Lens LH
J4
License Plate Light Lens RH
5
JH1

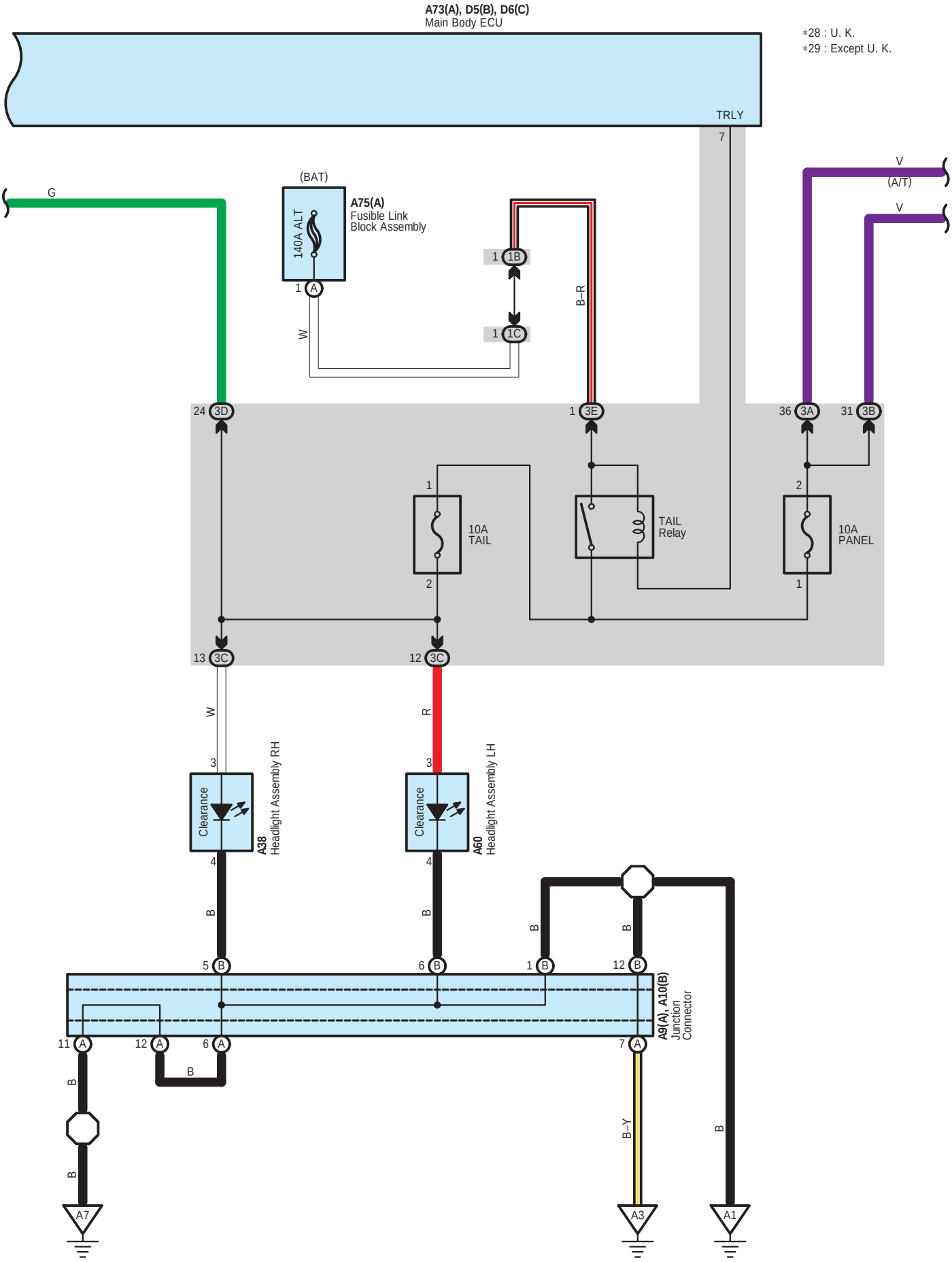
A73(A), D5(B), D6(C)
Main Body ECU
*28 : U. K.
*29 : Except U. K.
TRLY
7
G
(BAT)
140A ALT
A75(A)
Fusible Link
Block Assembly
1 A
W
1 1B
1 1C
B–R
V
(A/T)
V
24 3D
1 3E
36 3A
31 3B
1
10A
TAIL
2
TAIL
Relay
2
10A
PANEL
1
13 3C
12 3C
W
R
3
Clearance
A38
Headlight Assembly RH
3
Clearance
A60
Headlight Assembly LH
4
4
B
B
B
B
5 B
6 B
1 B
12 B
A9(A), A10(B)
Junction
Connector
11 A
12 A
6 A
7 A
B
B
B
B–Y
B
A7
A3
A1

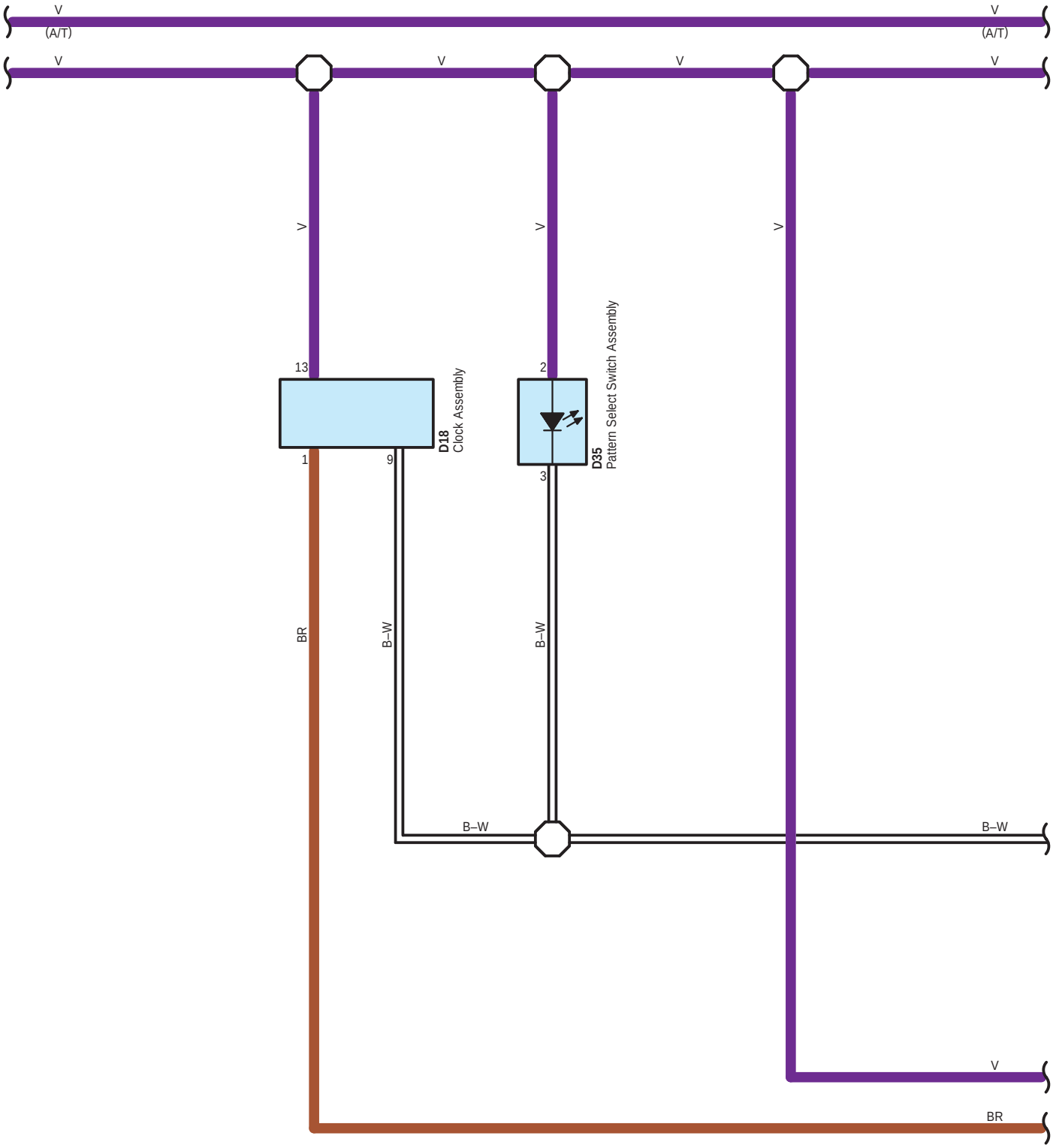
V
(A/T)
V
(A/T)
V
V
V
V
V
V
V
13
1
9
D18
Clock Assembly
2
3
D35
Pattern Select Switch Assembly
BR
B–W
B–W
B–W
B–W
V
BR

∗11 : Automatic A/C
∗12 : Except Automatic A/C

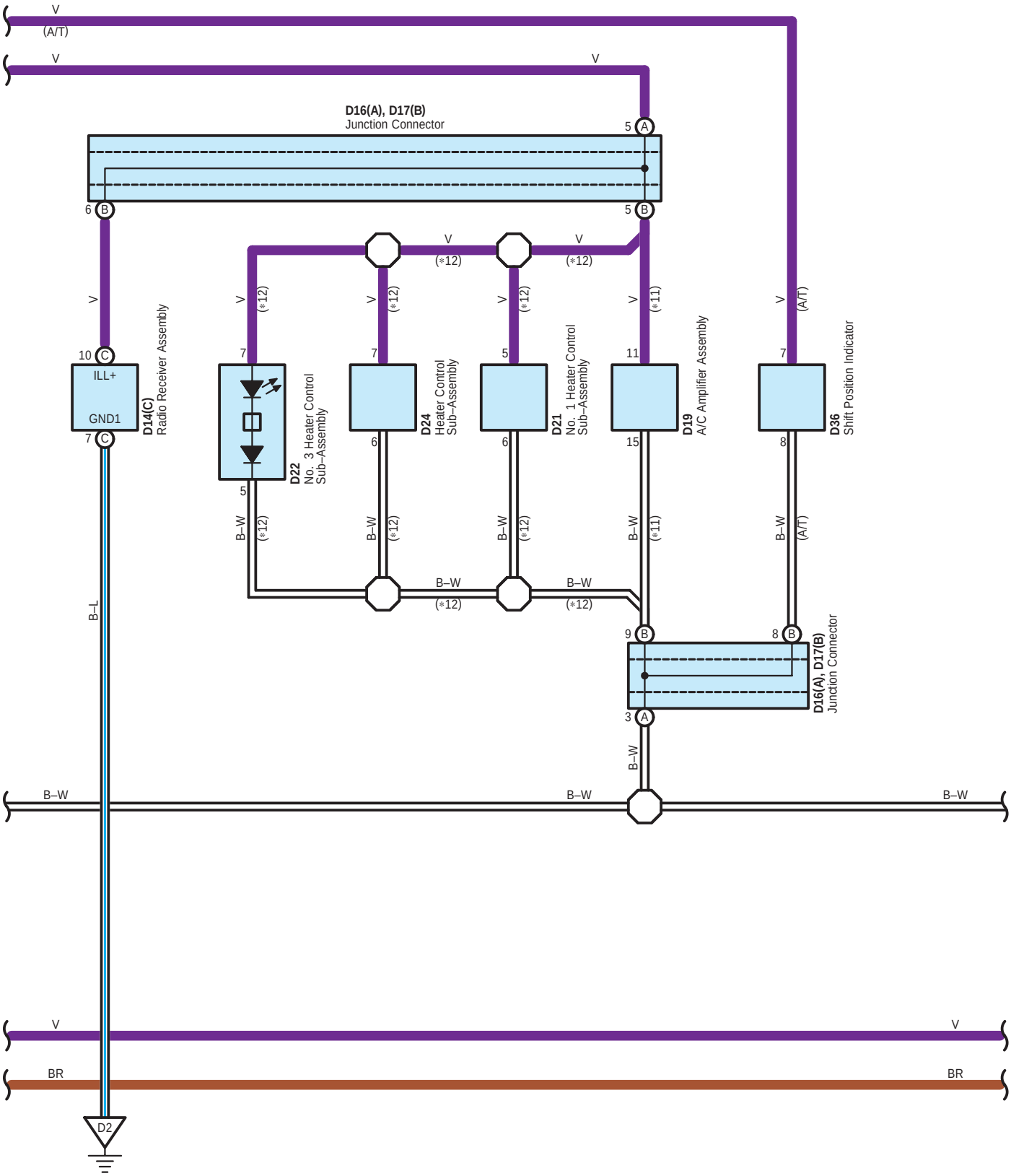

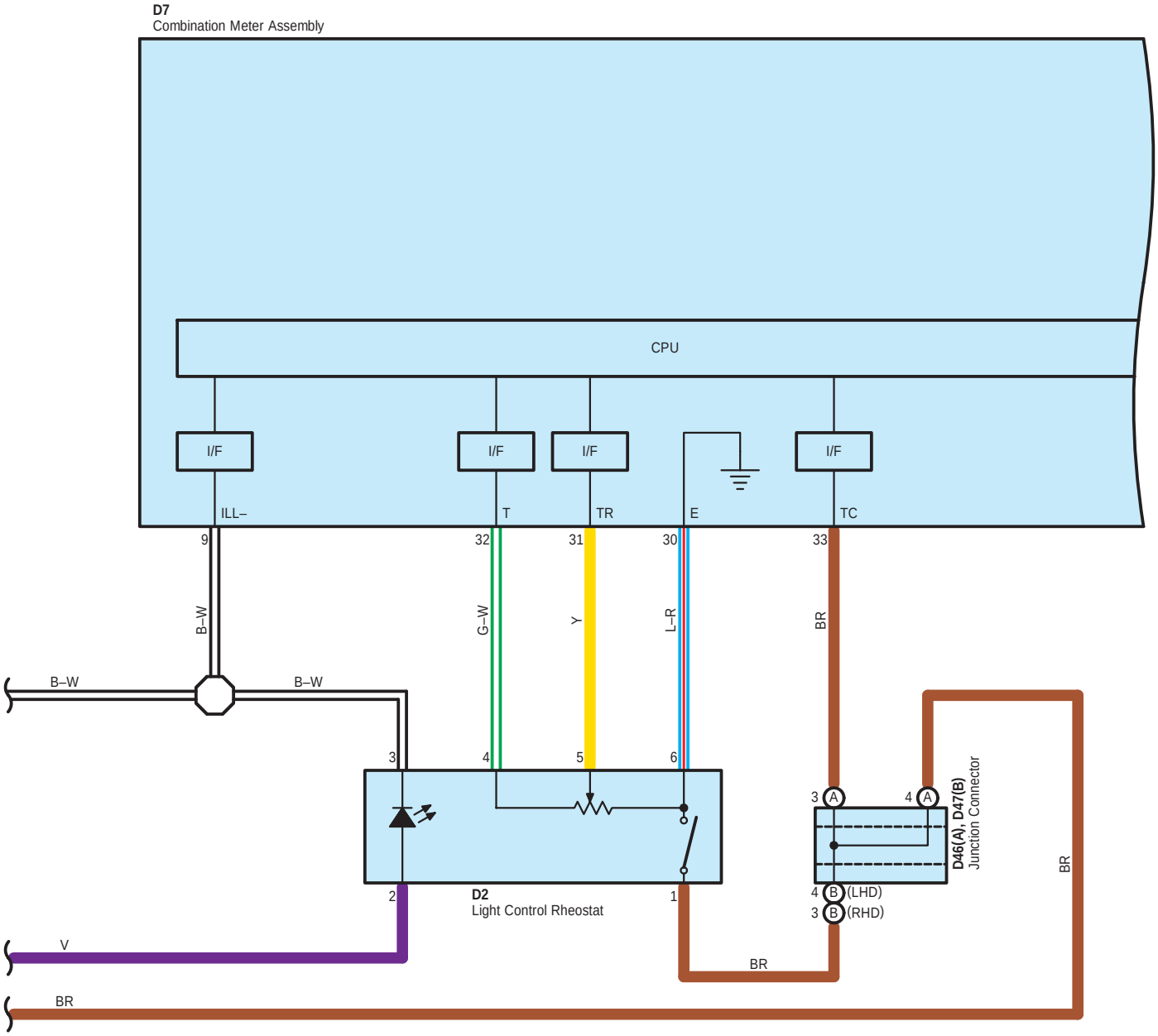
D7
Combination Meter Assembly
CPU
I/F
I/F
I/F
I/F
ILL–
T
TR
E
TC
9
32
31
30
33
B–W
G–W
Y
L–R
BR
B–W
B–W
3
4
5
6
2
1
D2
Light Control Rheostat
3 A
4 A
D46(A), D47(B)
Junction Connector
4 B (LHD)
3 B (RHD)
BR
V
BR
BR

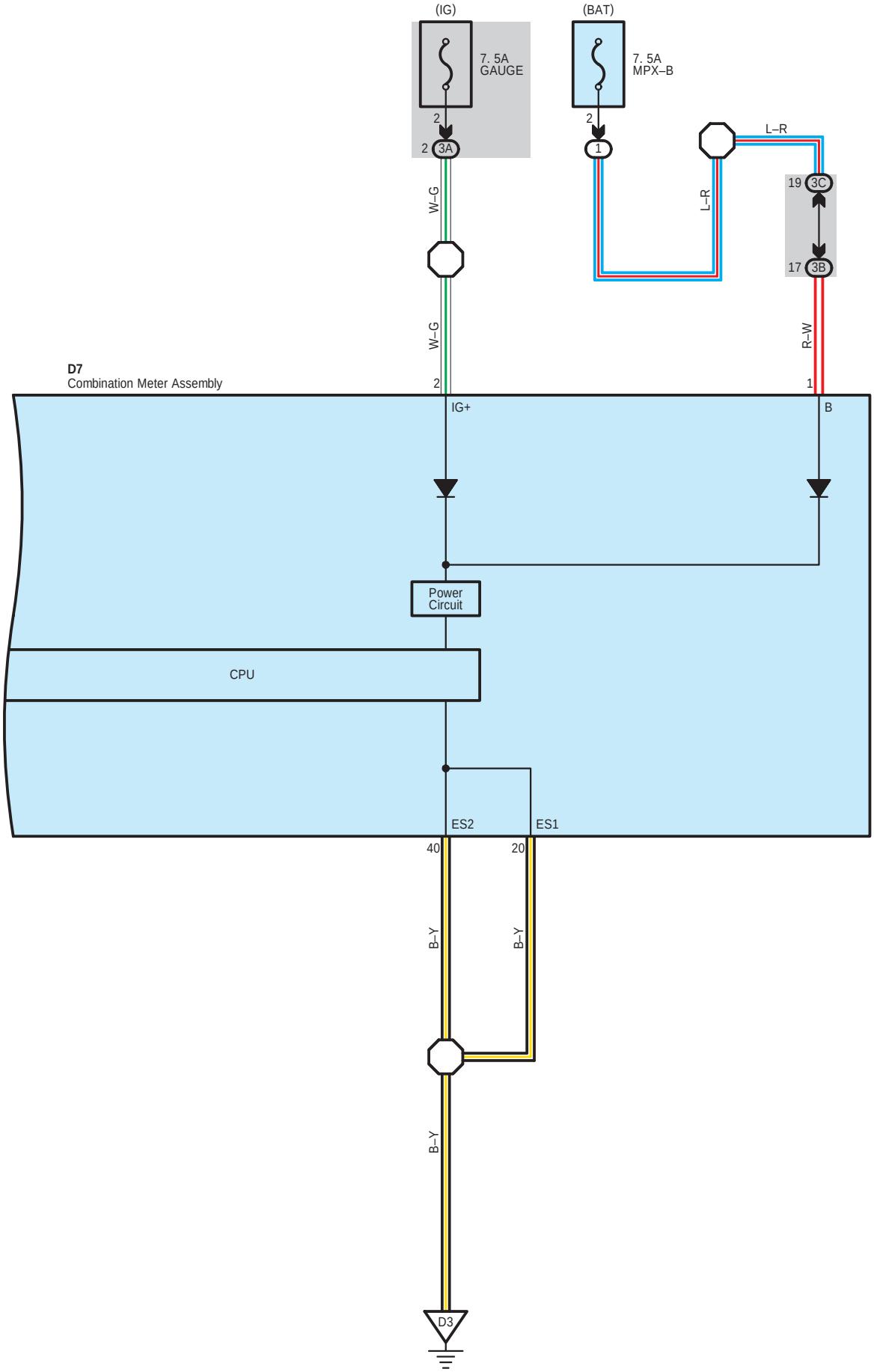
(IG)
7. 5A
GAUGE
2
2 3A
W–G
W–G
(BAT)
7. 5A
MPX–B
2
1
L–R
L–R
19 3C
17 3B
R–W
D7
Combination Meter Assembly
2
IG+
1
B
Power
Circuit
CPU
ES2
ES1
40
20
B–Y
B–Y
B–Y
D3

○ : **Parts Location**

Code		See Page	Code		See Page	Code		See Page
A9	A	42 (LHD)	D9	B	40 (LHD)	D36		40 (LHD)
		50 (RHD)			48 (RHD)			48 (RHD)
A10	B	42 (LHD)	D14	C	40 (LHD)	D41	B	41 (LHD)
		50 (RHD)			48 (RHD)			49 (RHD)
A38		39 (LHD)	D16	A	40 (LHD)	D43		41 (LHD)
		47 (RHD)			48 (RHD)			49 (RHD)
A60		39 (LHD)	D17	B	40 (LHD)	D46	A	41 (LHD)
		47 (RHD)			48 (RHD)			49 (RHD)
A73	A	42 (LHD)	D18		40 (LHD)	D47	B	41 (LHD)
		50 (RHD)			48 (RHD)			49 (RHD)
A75	A	39 (LHD)	D19		40 (LHD)	D50	A	41 (LHD)
		47 (RHD)			48 (RHD)			49 (RHD)
D2		40 (LHD)	D21		40 (LHD)	H1	A	45 (LHD)
		48 (RHD)			48 (RHD)			53 (RHD)
D5	B	40 (LHD)	D22		40 (LHD)	H6	A	45 (LHD)
		48 (RHD)			48 (RHD)			53 (RHD)
D6	C	40 (LHD)	D24		40 (LHD)	J1		45 (LHD)
		48 (RHD)			48 (RHD)			53 (RHD)
D7		40 (LHD)	D25		40 (LHD)	J4		45 (LHD)
		48 (RHD)			48 (RHD)			53 (RHD)
D8	A	40 (LHD)	D35		40 (LHD)			
		48 (RHD)			48 (RHD)			

Relay Blocks

Code	See Page	Relay Blocks (Relay Block Location)
1	24	Engine Room R/B (Engine Compartment Right)

Junction Block and Wire Harness Connector

Code	See Page	Junction Block and Wire Harness (Connector Location)
1B	24	Engine Room Main Wire and Engine Room J/B (Engine Compartment Right)
1C		
3A	26	Instrument Panel Wire and Instrument Panel J/B Assembly (Instrument Panel Reinforcement)
3B		
3C	26	Engine Room Main Wire and Instrument Panel J/B Assembly (Instrument Panel Reinforcement)
3D	26	Instrument Panel Wire and Instrument Panel J/B Assembly (Instrument Panel Reinforcement)
3E	26	Engine Room Main Wire and Instrument Panel J/B Assembly (Instrument Panel Reinforcement)

Connector Joining Wire Harness and Wire Harness

Code	See Page	Joining Wire Harness and Wire Harness (Connector Location)
AD1	59 (RHD)	Engine Room Main Wire and Instrument Panel Wire (Cowl Side Panel RH)
AD2	55 (LHD)	Engine Room Main Wire and Instrument Panel Wire (Instrument Panel Reinforcement)
HD1	55 (LHD)	No. 2 Floor Wire and Instrument Panel Wire (Cowl Side Panel LH)
	59 (RHD)	
JH1	56 (LHD)	Luggage Room Wire and No. 2 Floor Wire (Quarter Panel LH)
	60 (RHD)	

Ground Points

Code	See Page	Ground Points Location
A1	54 (LHD)	Front Fender Apron LH
	58 (RHD)	
A3	55 (LHD)	Cowl Side Panel RH
	59 (RHD)	Cowl Side Panel LH
A7	54 (LHD)	Front Fender Apron RH
	58 (RHD)	
D1	55 (LHD)	Cowl Side Panel LH
	59 (RHD)	Cowl Side Panel RH

▽ : **Ground Points**

Code	See Page	Ground Points Location
D2	55 (LHD)	Instrument Panel Brace LH
	59 (RHD)	Instrument Panel Brace RH
D3	55 (LHD)	
	59 (RHD)	Instrument Panel Brace LH
D4	55 (LHD)	Cowl Side Panel RH
	59 (RHD)	Cowl Side Panel LH
H1	56 (LHD)	Lower Back Panel
	60 (RHD)	

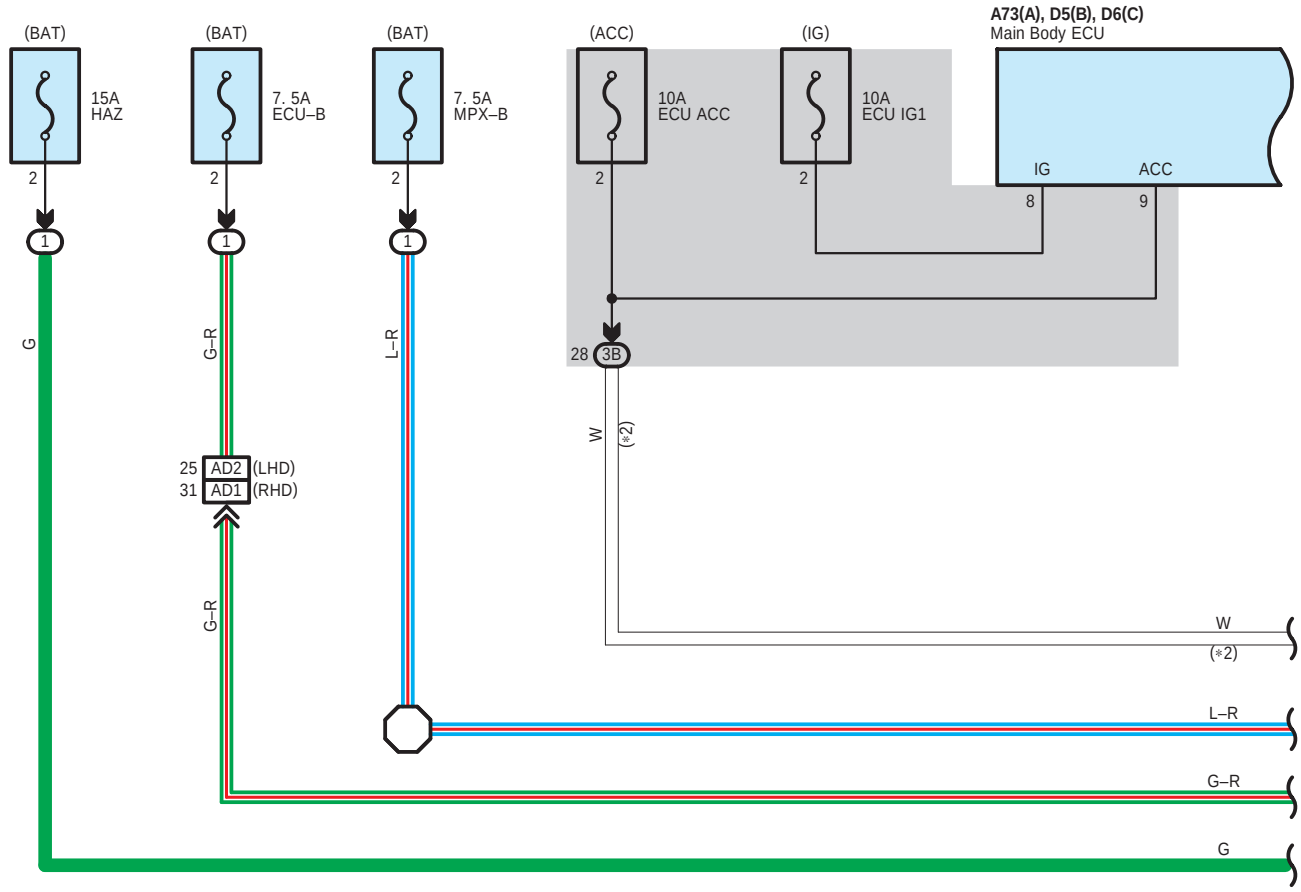

* 2 : w/ Entry & Start System

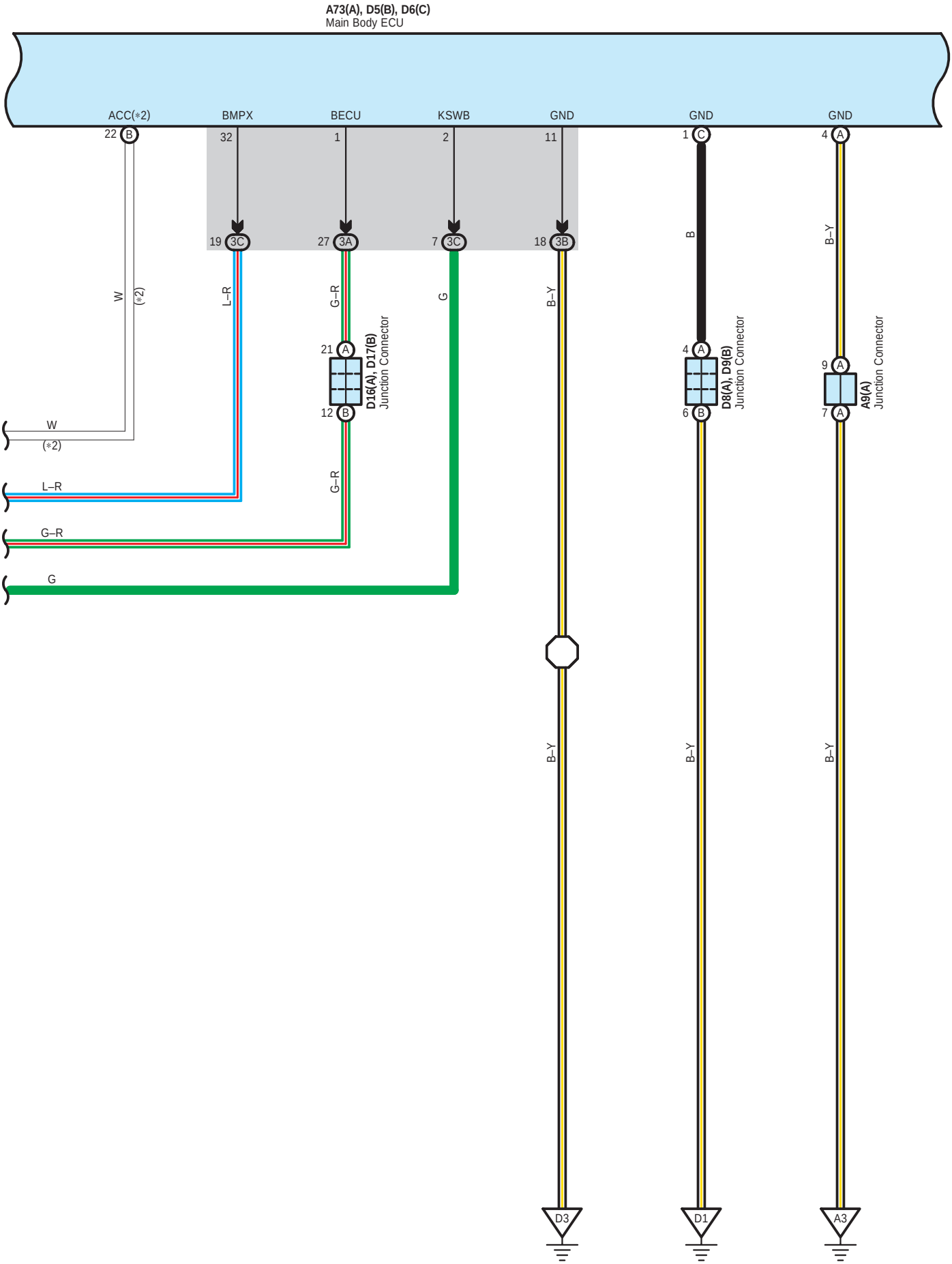
A73(A), D5(B), D6(C)
Main Body ECU
ACC(*2)
BMPX
BECU
KSWB
GND
GND
GND
22 B
32
1
2
11
1 C
4 A
19 3C
27 3A
7 3C
18 3B
W
(*2)
L–R
G–R
G
B–Y
B
B–Y
21 A
12 B
D16(A), D17(B)
Junction Connector
4 A
6 B
D8(A), D9(B)
Junction Connector
9 A
7 A
A9(A)
Junction Connector
W
(*2)
L–R
G–R
G
D3
D1
A3

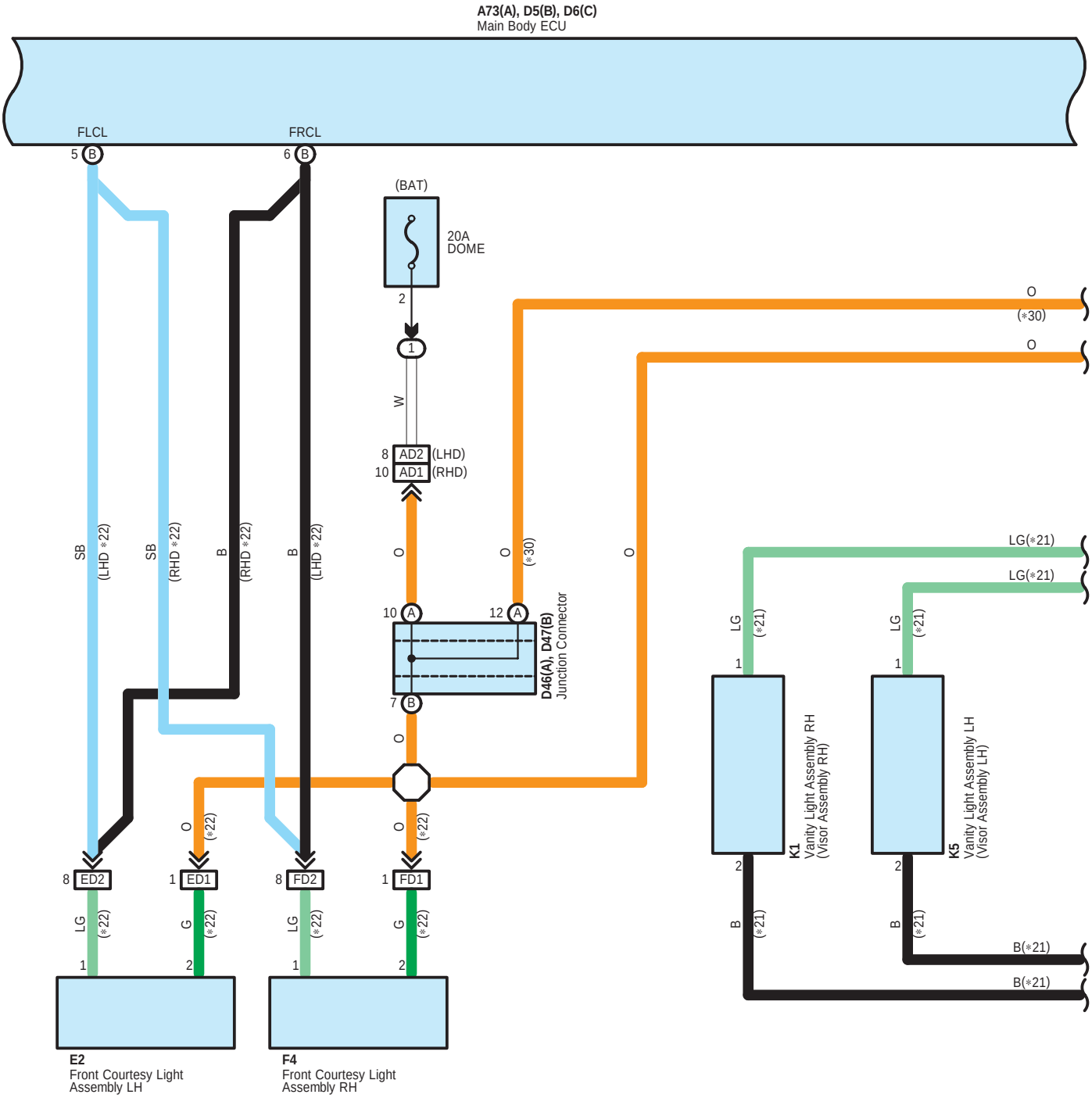

∗21 : w/ Vanity Light Assembly
∗22 : w/ Courtesy Light
∗30 : w/ Luggage Compartment Light

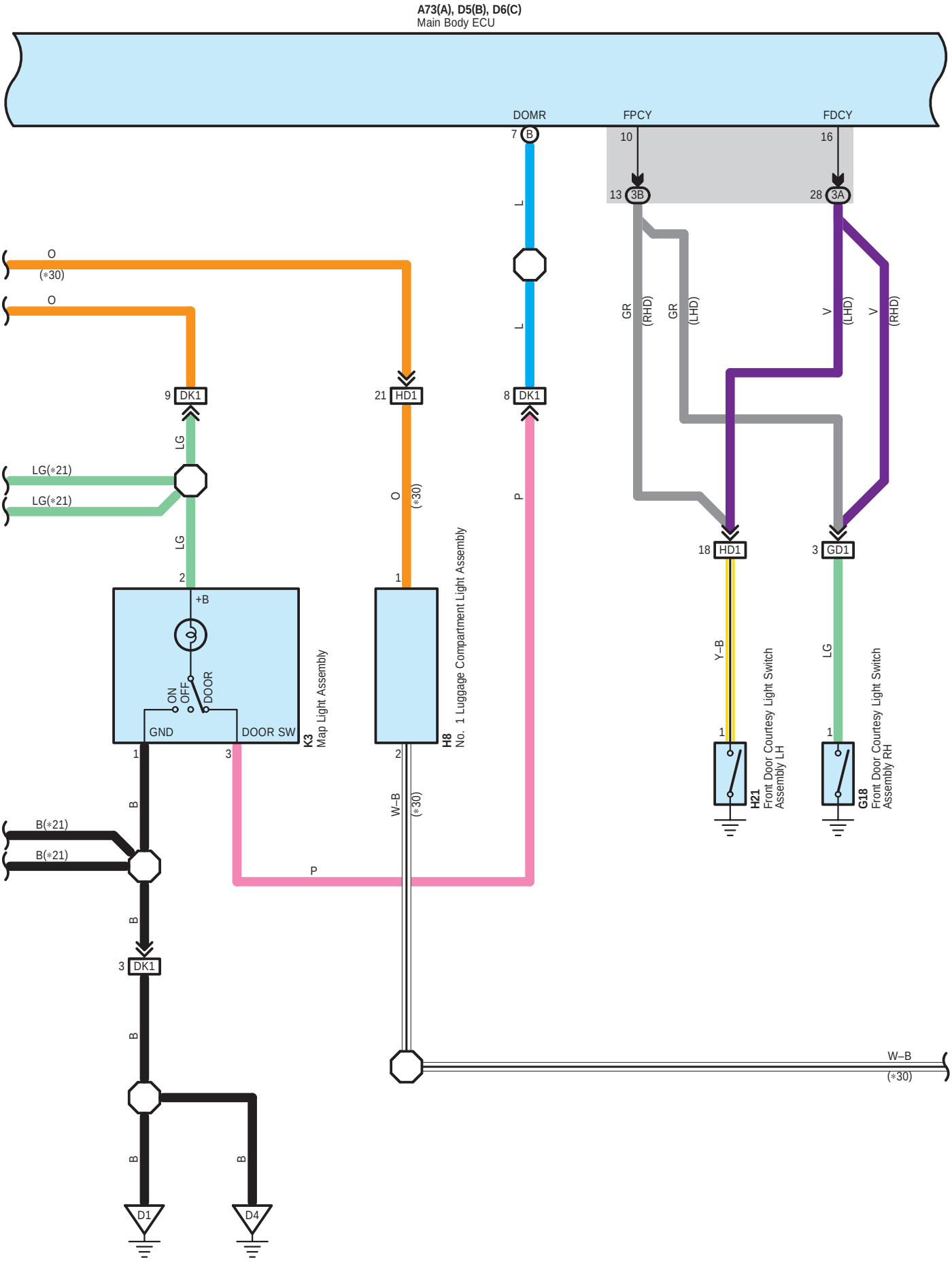
A73(A), D5(B), D6(C)
Main Body ECU
DOMR
FPCY
FDCY
7 B
10
16
13 3B
28 3A
L
L
O
(*30)
O
GR (RHD)
GR (LHD)
V (LHD)
V (RHD)
9 DK1
21 HD1
8 DK1
LG
LG(*21)
LG(*21)
O (*30)
P
LG
2
1
+B
ON
OFF
DOOR
GND
DOOR SW
K3
Map Light Assembly
H8
No. 1 Luggage Compartment Light Assembly
18 HD1
3 GD1
Y–B
LG
1
1
H21
Front Door Courtesy Light Switch Assembly LH
G18
Front Door Courtesy Light Switch Assembly RH
1
3
2
B
W–B
(*30)
B(*21)
B(*21)
P
B
3 DK1
B
W–B
(*30)
B
B
D1
D4

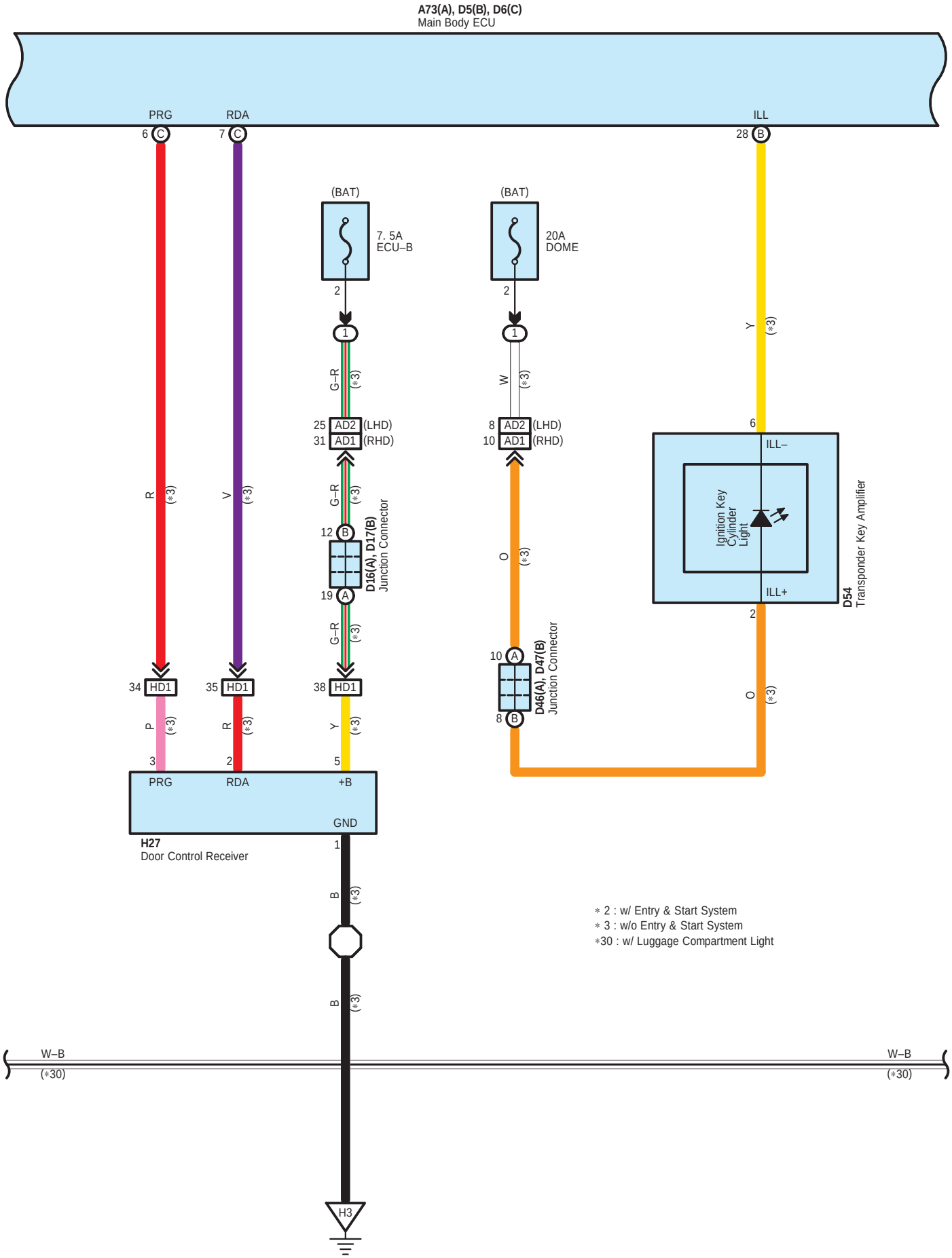
A73(A), D5(B), D6(C)
Main Body ECU
PRG
RDA
ILL
6 C
7 C
28 B
(BAT)
7. 5A
ECU–B
(BAT)
20A
DOME
2
1
G–R
(*3)
W
Y
25 AD2 (LHD)
31 AD1 (RHD)
8 AD2 (LHD)
10 AD1 (RHD)
6
ILL–
ILL+
Ignition Key Cylinder Light
D54
Transponder Key Amplifier
R
V
12 B
19 A
D16(A), D17(B)
Junction Connector
O
10 A
8 B
D46(A), D47(B)
Junction Connector
34 HD1
35 HD1
38 HD1
P
3
2
5
PRG
RDA
+B
GND
H27
Door Control Receiver
B
W–B
(*30)
H3
* 2 : w/ Entry & Start System
* 3 : w/o Entry & Start System
*30 : w/ Luggage Compartment Light

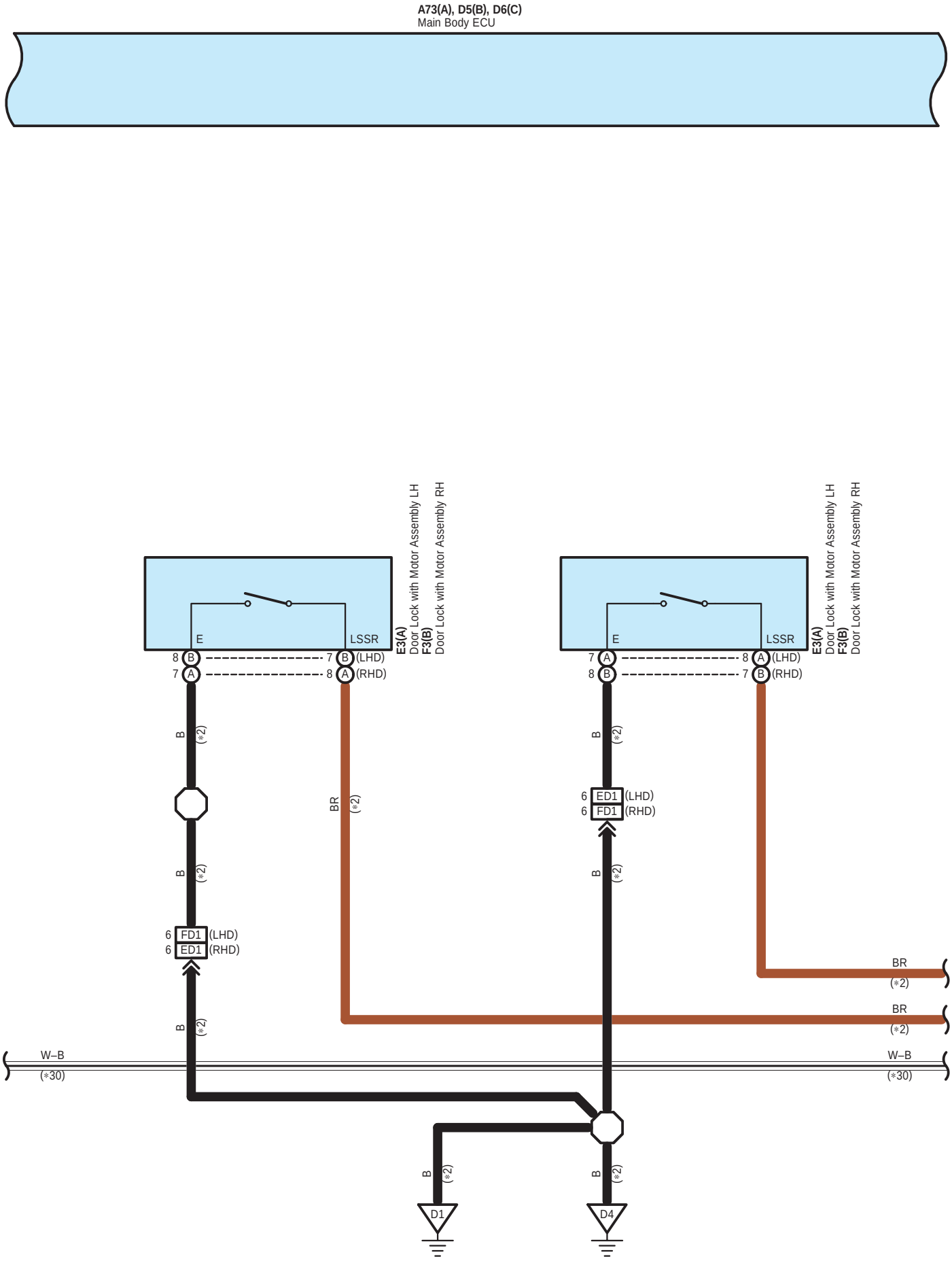
A73(A), D5(B), D6(C)
Main Body ECU
E3(A)
Door Lock with Motor Assembly LH
F3(B)
Door Lock with Motor Assembly RH
E
LSSR
8 B
7 A
7 B (LHD)
8 A (RHD)
B (*2)
BR (*2)
6 FD1 (LHD)
6 ED1 (RHD)
7 A
8 B
8 A (LHD)
7 B (RHD)
6 ED1 (LHD)
6 FD1 (RHD)
BR (*2)
W–B (*30)
D1
D4

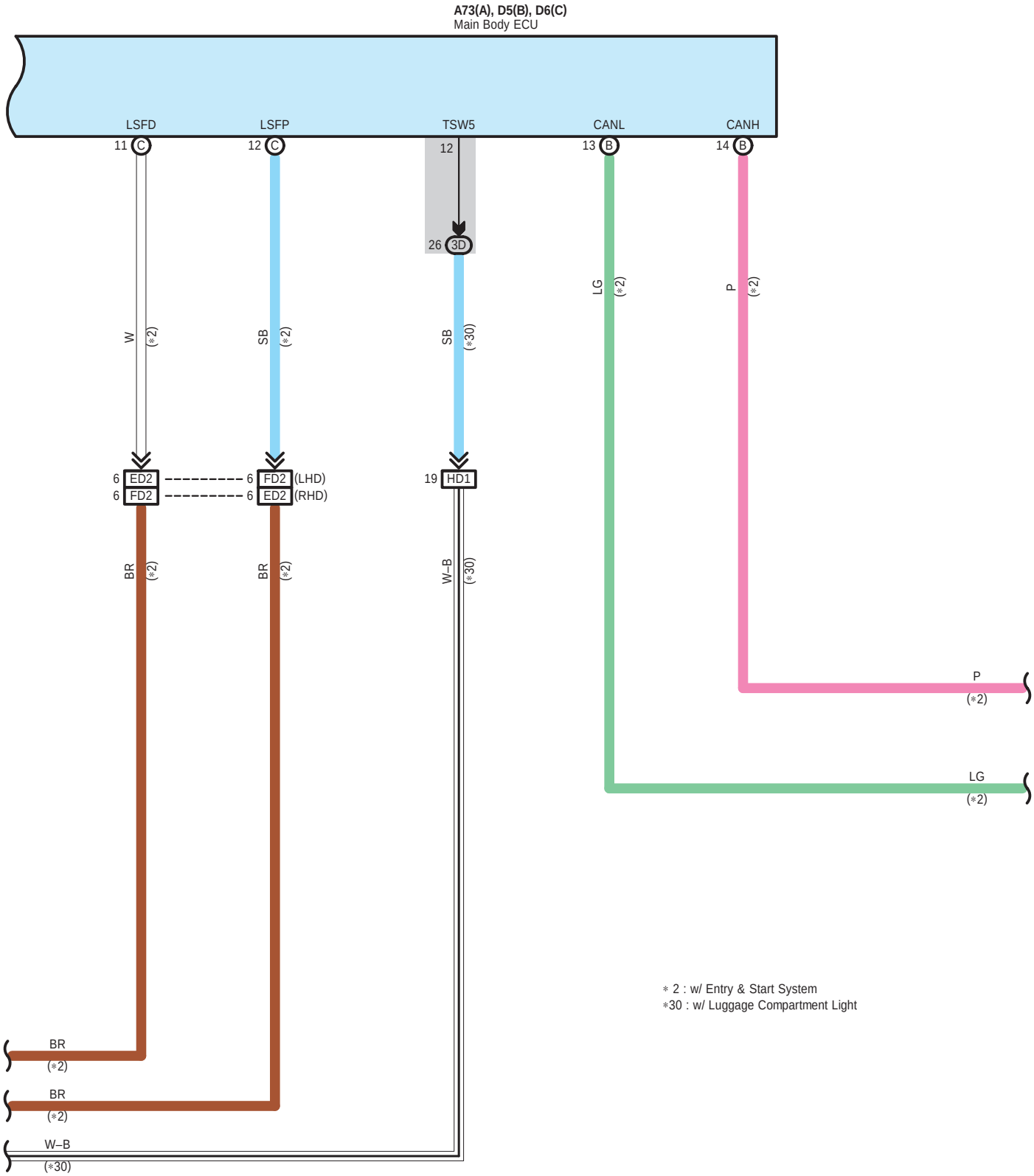
A73(A), D5(B), D6(C)
Main Body ECU
LSFD
LSFP
TSW5
CANL
CANH
11 C
12 C
12
26 3D
13 B
14 B
W
(*2)
SB
(*2)
SB
(*30)
LG
(*2)
P
(*2)
6 ED2
6 FD2
6 FD2 (LHD)
6 ED2 (RHD)
19 HD1
BR
(*2)
BR
(*2)
W–B
(*30)
P
(*2)
LG
(*2)
BR
(*2)
BR
(*2)
W–B
(*30)
* 2 : w/ Entry & Start System
*30 : w/ Luggage Compartment Light

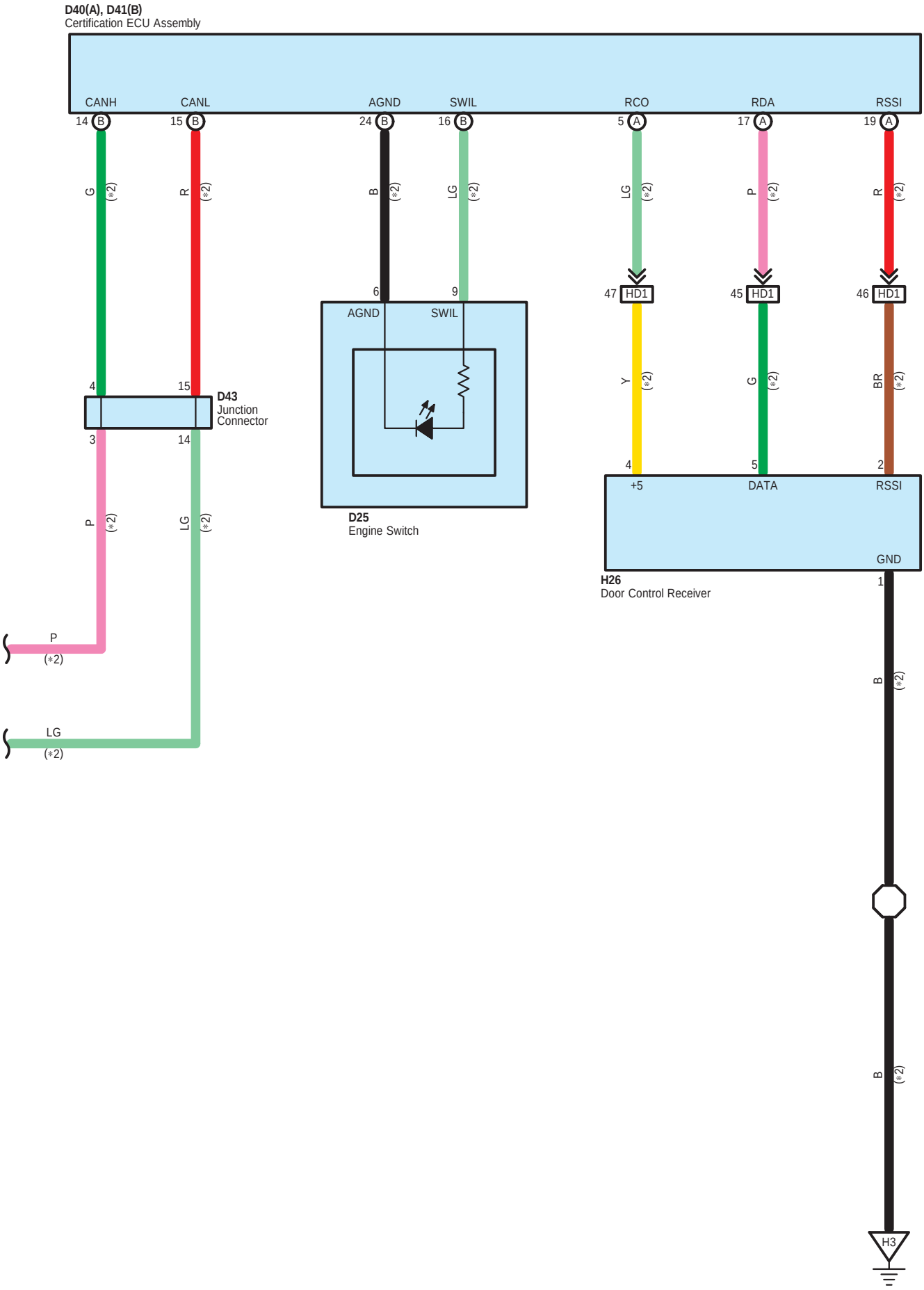
D40(A), D41(B)
Certification ECU Assembly
CANH
CANL
AGND
SWIL
RCO
RDA
RSSI
14 B
15 B
24 B
16 B
5 A
17 A
19 A
G (*2)
R (*2)
B (*2)
LG (*2)
LG (*2)
P (*2)
R (*2)
6
9
AGND
SWIL
47 HD1
45 HD1
46 HD1
Y (*2)
G (*2)
BR (*2)
4
15
D43
Junction
Connector
3
14
4
5
2
+5
DATA
RSSI
GND
D25
Engine Switch
H26
Door Control Receiver
1
P (*2)
LG (*2)
P
(*2)
LG
(*2)
B (*2)
B (*2)
H3

Interior Light

○ : **Parts Location**

Code		See Page	Code		See Page	Code	See Page
A9	A	42 (LHD)	D40	A	41 (LHD)	F4	44 (LHD)
		50 (RHD)			49 (RHD)		52 (RHD)
A73	A	42 (LHD)	D41	B	41 (LHD)	G18	44 (LHD)
		50 (RHD)			49 (RHD)		52 (RHD)
D5	B	40 (LHD)	D43		41 (LHD)	H8	45 (LHD)
		48 (RHD)			49 (RHD)		53 (RHD)
D6	C	40 (LHD)	D46	A	41 (LHD)	H21	45 (LHD)
		48 (RHD)			49 (RHD)		53 (RHD)
D8	A	40 (LHD)	D47	B	41 (LHD)	H26	45 (LHD)
		48 (RHD)			49 (RHD)		53 (RHD)
D9	B	40 (LHD)	D54		41 (LHD)	H27	45 (LHD)
		48 (RHD)			49 (RHD)		53 (RHD)
D16	A	40 (LHD)	E2		44 (LHD)	K1	45 (LHD)
		48 (RHD)			52 (RHD)		53 (RHD)
D17	B	40 (LHD)	E3	A	44 (LHD)	K3	45 (LHD)
		48 (RHD)			52 (RHD)		53 (RHD)
D25		40 (LHD)	F3	B	44 (LHD)	K5	45 (LHD)
		48 (RHD)			52 (RHD)		53 (RHD)

▭ : **Relay Blocks**

Code	See Page	Relay Blocks (Relay Block Location)
1	24	Engine Room R/B (Engine Compartment Right)

▭ : **Junction Block and Wire Harness Connector**

Code	See Page	Junction Block and Wire Harness (Connector Location)
3A	26	Instrument Panel Wire and Instrument Panel J/B Assembly (Instrument Panel Reinforcement)
3B		
3C	26	Engine Room Main Wire and Instrument Panel J/B Assembly (Instrument Panel Reinforcement)
3D	26	Instrument Panel Wire and Instrument Panel J/B Assembly (Instrument Panel Reinforcement)

▭ : **Connector Joining Wire Harness and Wire Harness**

Code	See Page	Joining Wire Harness and Wire Harness (Connector Location)
AD1	59 (RHD)	Engine Room Main Wire and Instrument Panel Wire (Cowl Side Panel RH)
AD2	55 (LHD)	Engine Room Main Wire and Instrument Panel Wire (Instrument Panel Reinforcement)
DK1	55 (LHD)	Instrument Panel Wire and Roof Wire (Front Body Inner Pillar RH)
	59 (RHD)	
ED1	55 (LHD)	Front Door Wire LH and Instrument Panel Wire (Cowl Side Panel LH)
	59 (RHD)	
ED2	55 (LHD)	
	59 (RHD)	
FD1	55 (LHD)	Front Door Wire RH and Instrument Panel Wire (Cowl Side Panel RH)
	59 (RHD)	
FD2	55 (LHD)	
	59 (RHD)	
GD1	55 (LHD)	No. 1 Floor Wire and Instrument Panel Wire (Cowl Side Panel RH)
	59 (RHD)	
HD1	55 (LHD)	No. 2 Floor Wire and Instrument Panel Wire (Cowl Side Panel LH)
	59 (RHD)	

▽ : **Ground Points**

Code	See Page	Ground Points Location
A3	55 (LHD)	Cowl Side Panel RH
	59 (RHD)	Cowl Side Panel LH
D1	55 (LHD)	
	59 (RHD)	Cowl Side Panel RH
D3	55 (LHD)	Instrument Panel Brace RH

▽ : **Ground Points**

Code	See Page	Ground Points Location
D3	59 (RHD)	Instrument Panel Brace LH
D4	55 (LHD)	Cowl Side Panel RH
	59 (RHD)	Cowl Side Panel LH
H3	56 (LHD)	Quarter Wheel House Panel LH
	60 (RHD)	

Front Fog Light

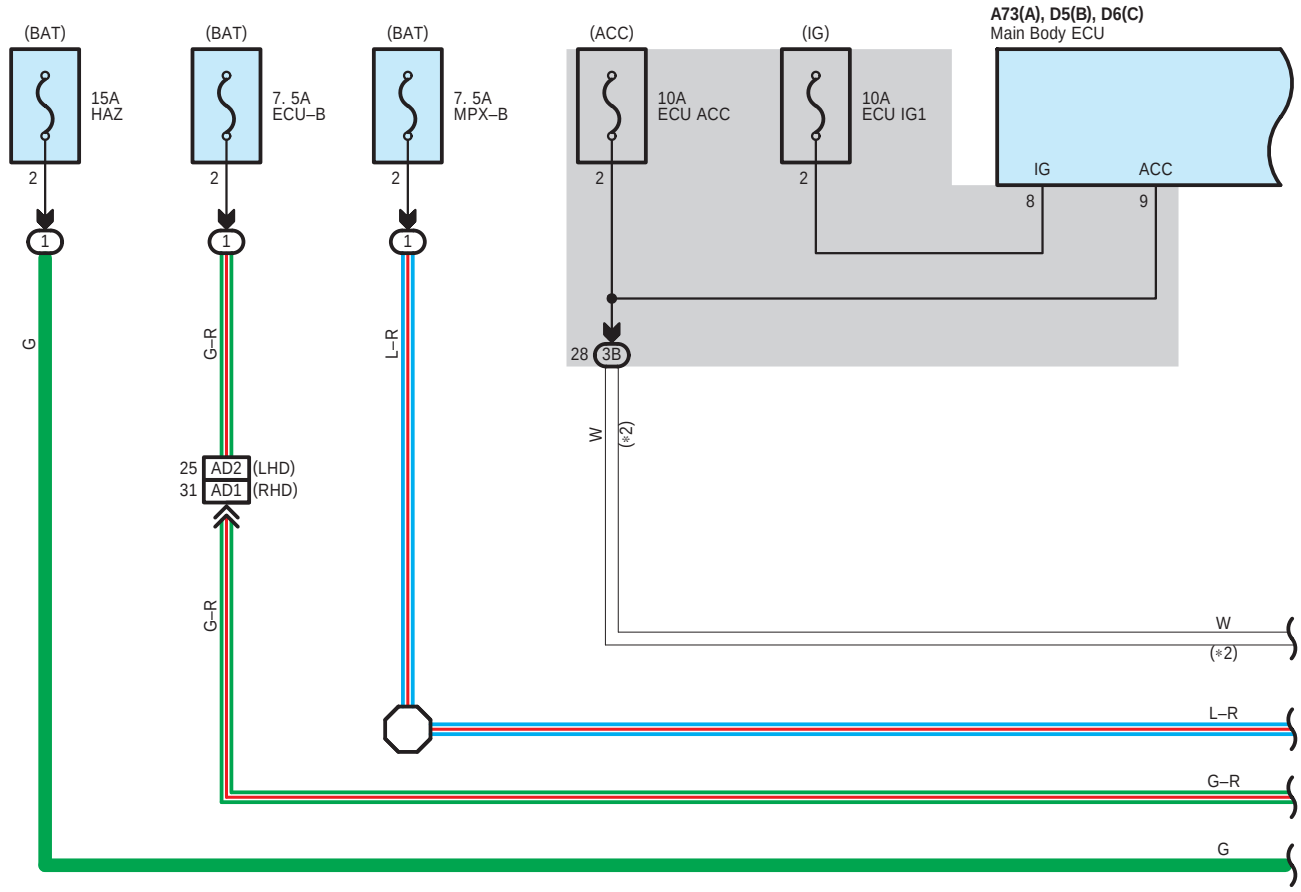

* 2 : w/ Entry & Start System

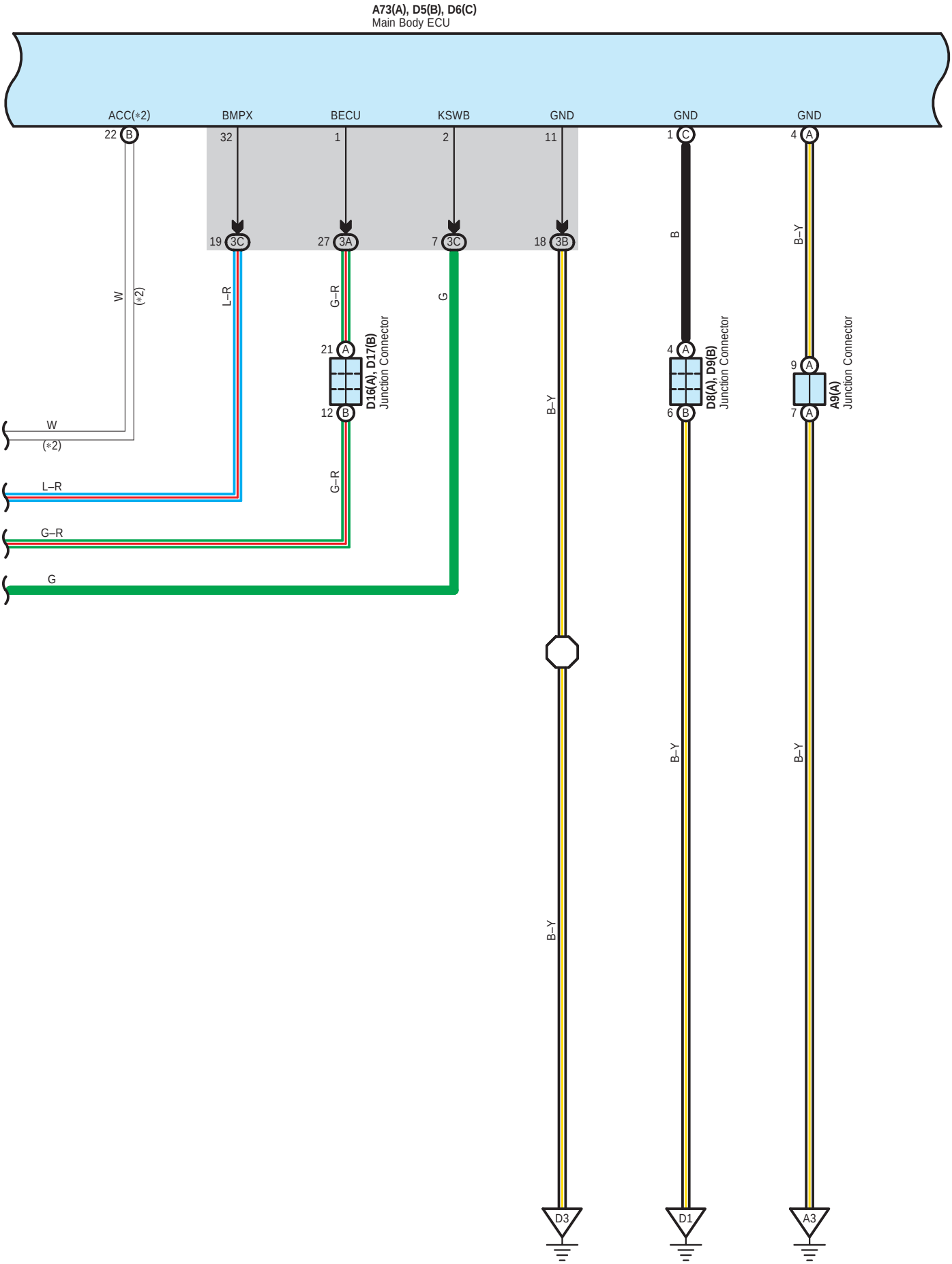
A73(A), D5(B), D6(C)
Main Body ECU
ACC(*2)
BMPX
BECU
KSWB
GND
GND
GND
22 B
32
1
2
11
1 C
4 A
19 3C
27 3A
7 3C
18 3B
W
(*2)
L–R
G–R
G
B
B–Y
21 A
12 B
D16(A), D17(B)
Junction Connector
4 A
6 B
D8(A), D9(B)
Junction Connector
9 A
7 A
A9(A)
Junction Connector
W
(*2)
L–R
G–R
G
D3
D1
A3

Front Fog Light

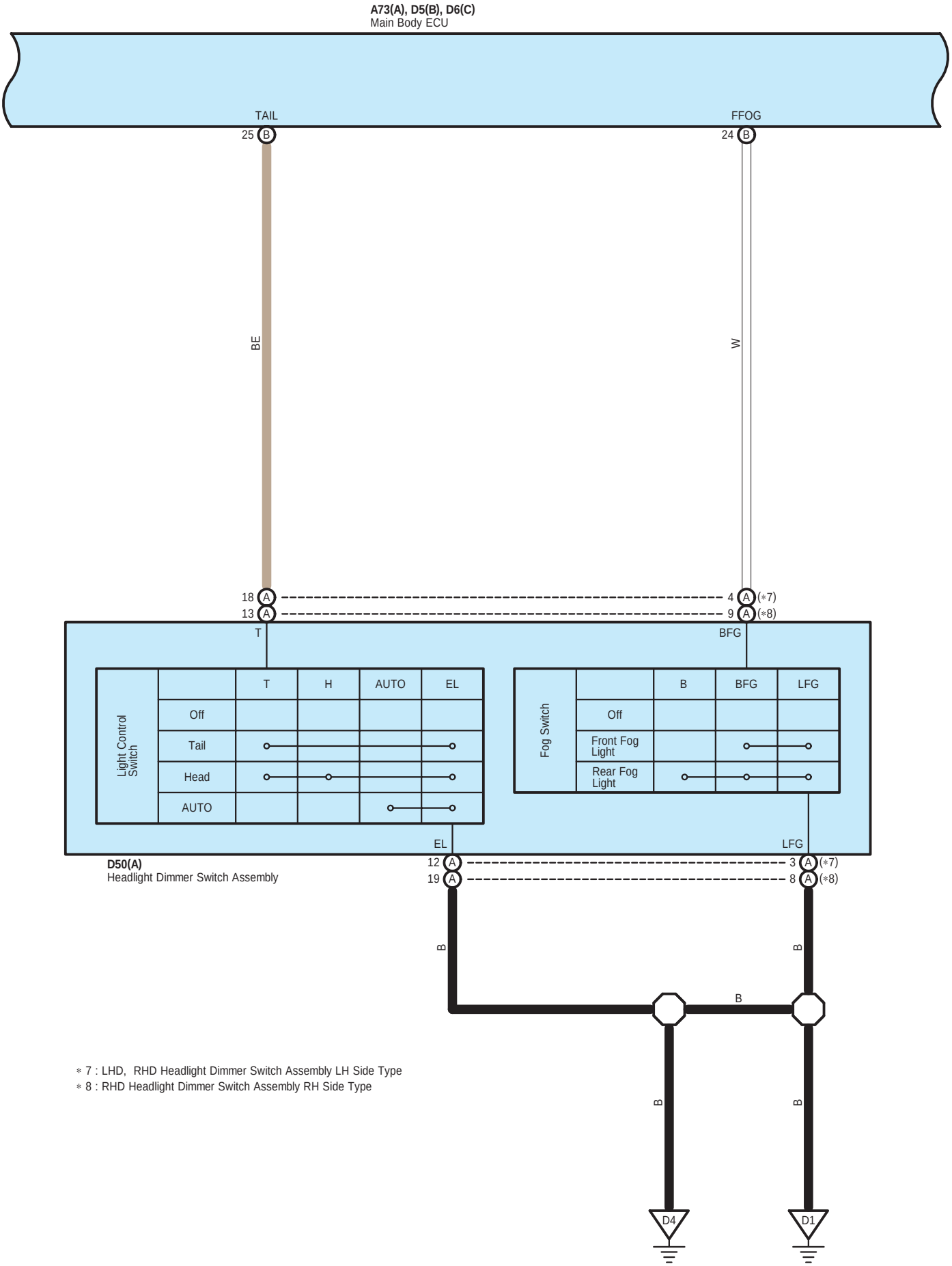

* 7 : LHD, RHD Headlight Dimmer Switch Assembly LH Side Type
* 8 : RHD Headlight Dimmer Switch Assembly RH Side Type

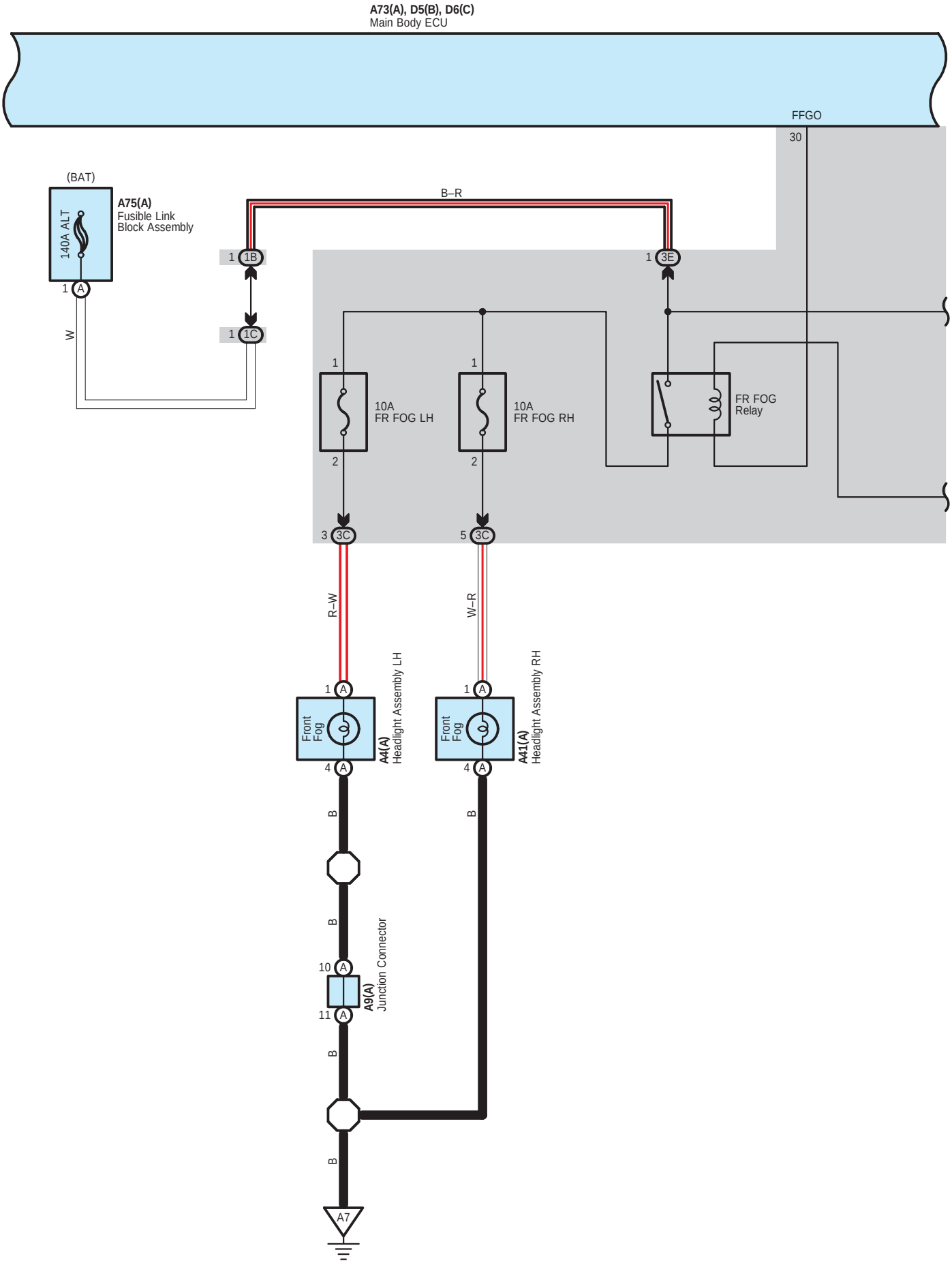
A73(A), D5(B), D6(C)
Main Body ECU
FFGO
30
(BAT)
140A ALT
A75(A)
Fusible Link
Block Assembly
B–R
1 1B
1 3E
1 A
W
1 1C
1
10A
FR FOG LH
2
1
10A
FR FOG RH
2
FR FOG
Relay
3 3C
5 3C
R–W
W–R
1 A
Front
Fog
A4(A)
Headlight Assembly LH
4 A
1 A
Front
Fog
A41(A)
Headlight Assembly RH
4 A
B
B
10 A
A9(A)
Junction Connector
11 A
B
B
A7

Front Fog Light

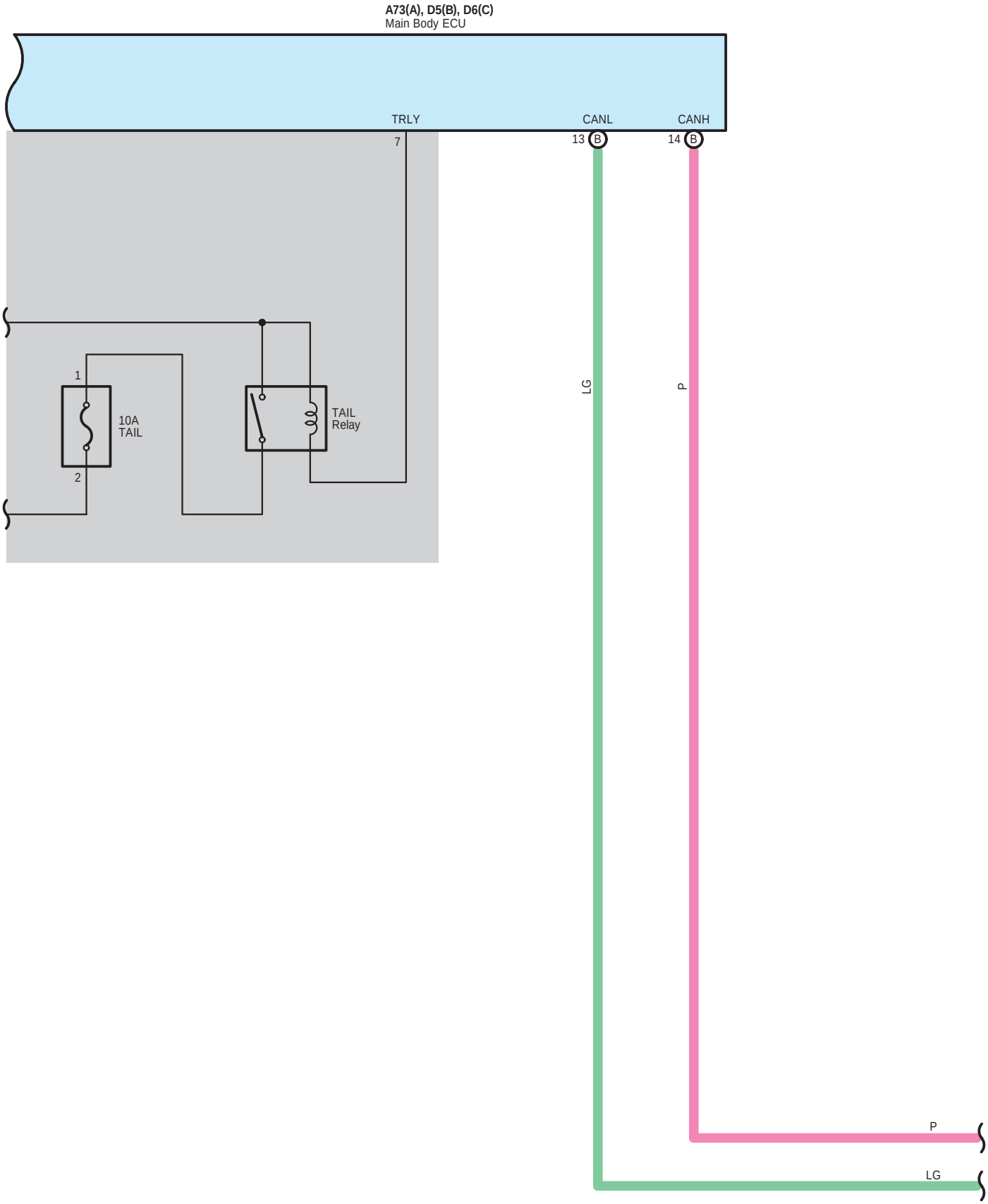

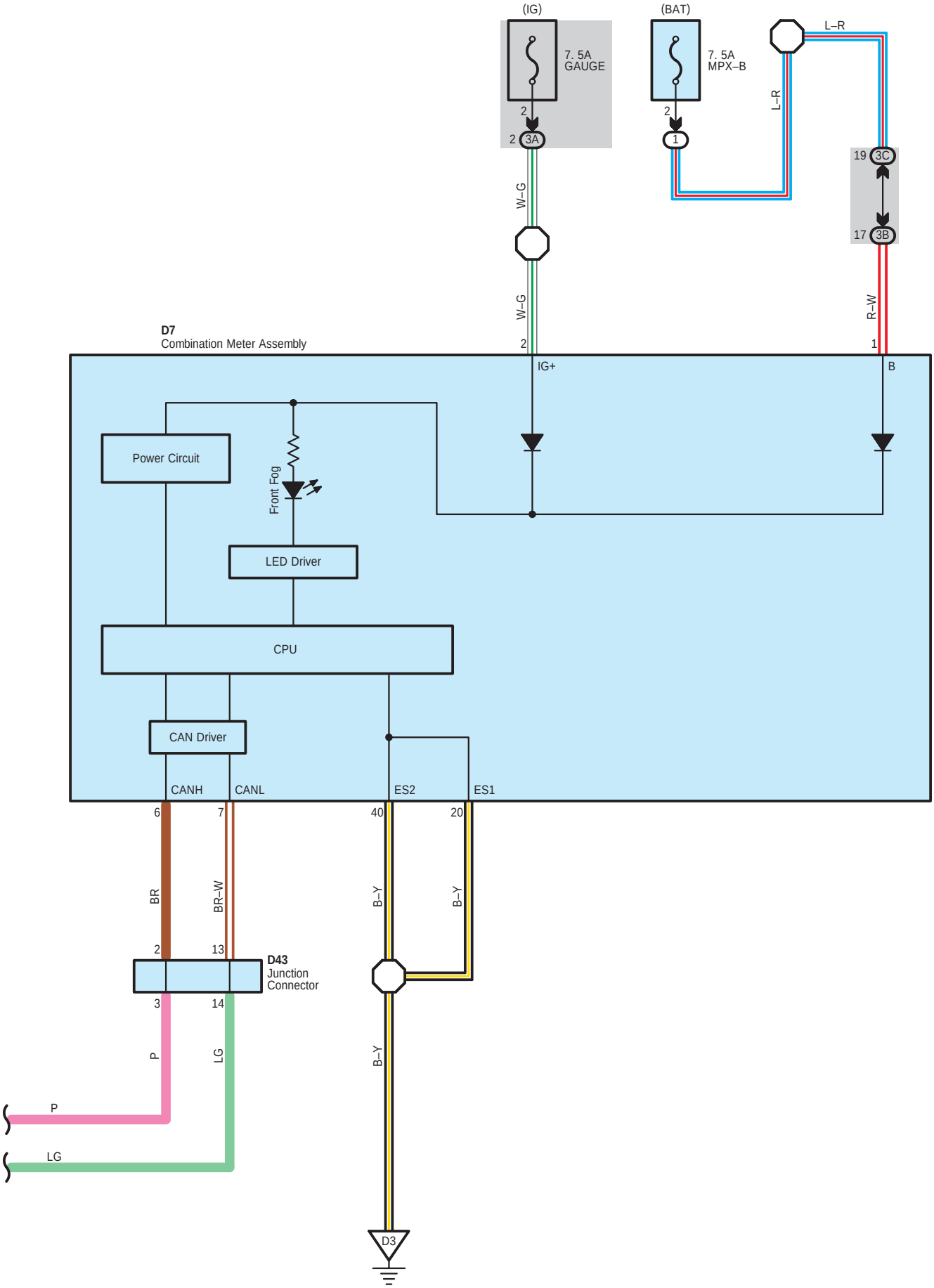
(IG)
7. 5A
GAUGE
2
2
3A
W–G
W–G
(BAT)
7. 5A
MPX–B
2
1
L–R
L–R
19
3C
17
3B
R–W
D7
Combination Meter Assembly
2
IG+
1
B
Power Circuit
Front Fog
LED Driver
CPU
CAN Driver
CANH
CANL
ES2
ES1
6
7
40
20
BR
BR–W
B–Y
B–Y
2
13
D43
Junction
Connector
3
14
P
LG
B–Y
P
LG
D3

Front Fog Light

: Parts Location

Code		See Page	Code		See Page	Code		See Page
A4	A	39 (LHD)	D5	B	40 (LHD)	D16	A	40 (LHD)
		47 (RHD)			48 (RHD)			48 (RHD)
A9	A	42 (LHD)	D6	C	40 (LHD)	D17	B	40 (LHD)
		50 (RHD)			48 (RHD)			48 (RHD)
A41	A	39 (LHD)	D7		40 (LHD)	D43		41 (LHD)
		47 (RHD)			48 (RHD)			49 (RHD)
A73	A	42 (LHD)	D8	A	40 (LHD)	D50	A	41 (LHD)
		50 (RHD)			48 (RHD)			49 (RHD)
A75	A	39 (LHD)	D9	B	40 (LHD)			
		47 (RHD)			48 (RHD)			

: Relay Blocks

Code	See Page	Relay Blocks (Relay Block Location)
1	24	Engine Room R/B (Engine Compartment Right)

: Junction Block and Wire Harness Connector

Code	See Page	Junction Block and Wire Harness (Connector Location)
1B	24	Engine Room Main Wire and Engine Room J/B (Engine Compartment Right)
1C		
3A	26	Instrument Panel Wire and Instrument Panel J/B Assembly (Instrument Panel Reinforcement)
3B		
3C	26	Engine Room Main Wire and Instrument Panel J/B Assembly (Instrument Panel Reinforcement)
3E		

: Connector Joining Wire Harness and Wire Harness

Code	See Page	Joining Wire Harness and Wire Harness (Connector Location)
AD1	59 (RHD)	Engine Room Main Wire and Instrument Panel Wire (Cowl Side Panel RH)
AD2	55 (LHD)	Engine Room Main Wire and Instrument Panel Wire (Instrument Panel Reinforcement)

: Ground Points

Code	See Page	Ground Points Location
A3	55 (LHD)	Cowl Side Panel RH
	59 (RHD)	Cowl Side Panel LH
A7	54 (LHD)	Front Fender Apron RH
	58 (RHD)	
D1	55 (LHD)	Cowl Side Panel LH
	59 (RHD)	Cowl Side Panel RH
D3	55 (LHD)	Instrument Panel Brace RH
	59 (RHD)	Instrument Panel Brace LH
D4	55 (LHD)	Cowl Side Panel RH
	59 (RHD)	Cowl Side Panel LH

Rear Fog Light

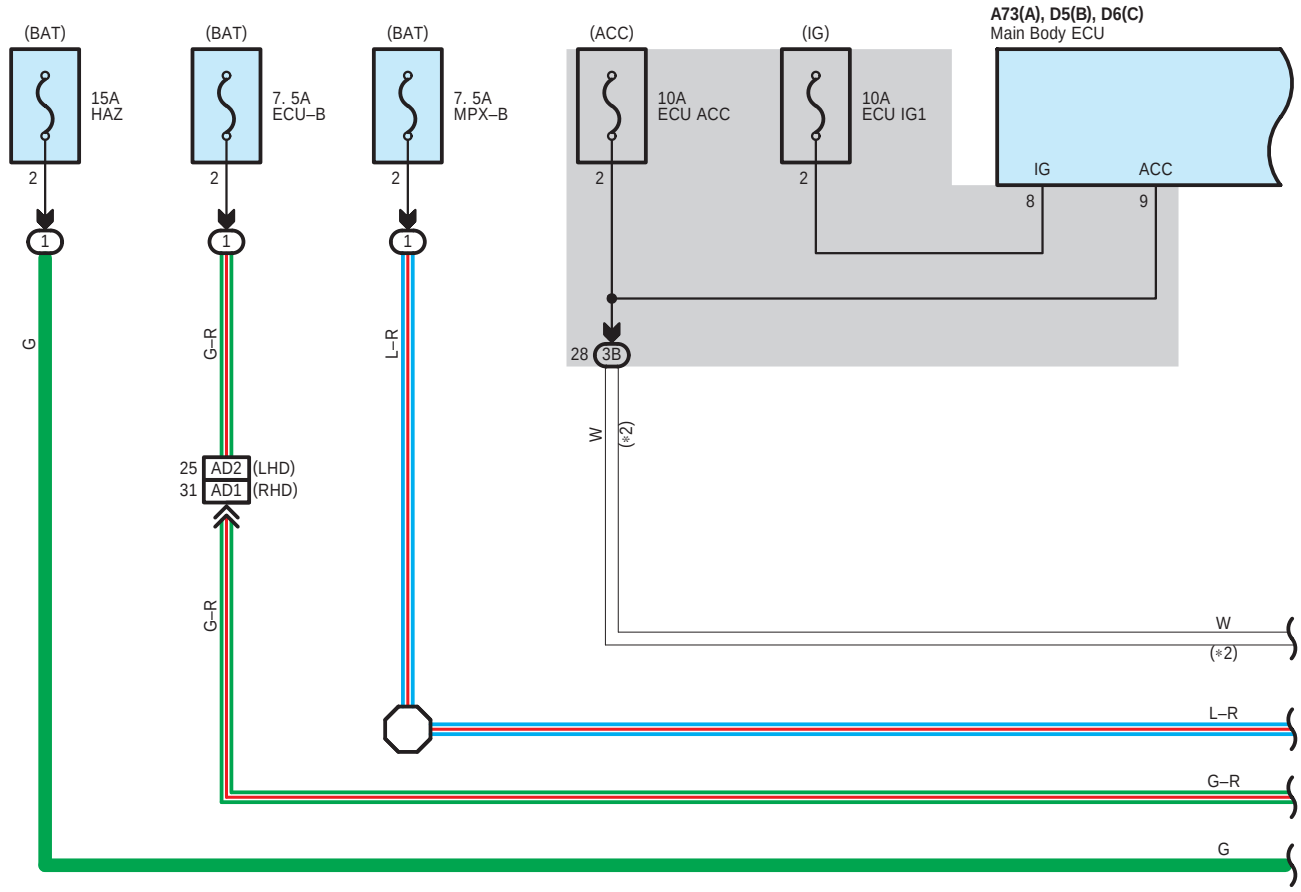

* 2 : w/ Entry & Start System

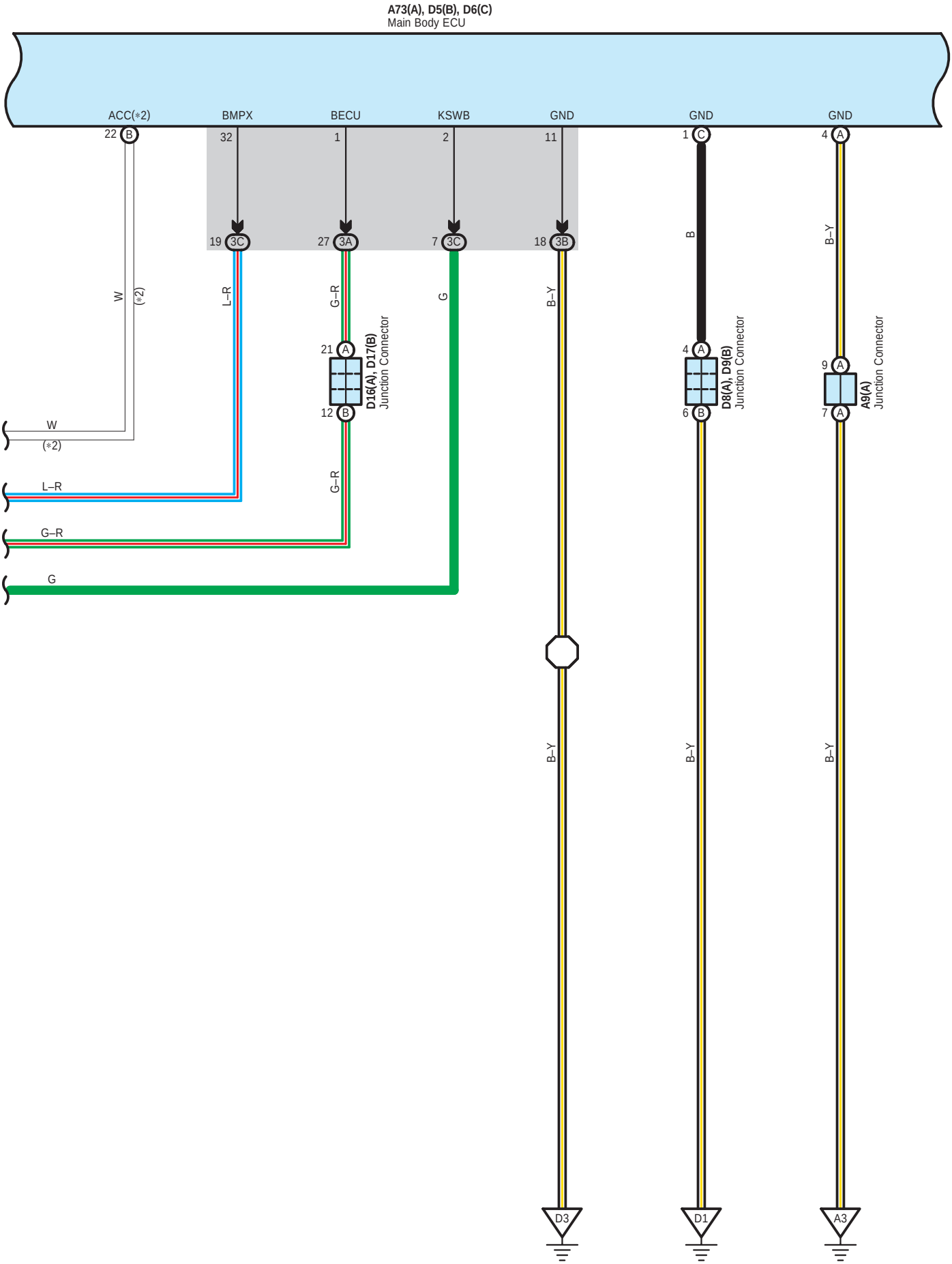
A73(A), D5(B), D6(C)
Main Body ECU
ACC(*2)
BMPX
BECU
KSWB
GND
GND
GND
22 B
32
1
2
11
1 C
4 A
19 3C
27 3A
7 3C
18 3B
W
(*2)
L–R
G–R
G
B–Y
B
B–Y
21 A
12 B
D16(A), D17(B)
Junction Connector
4 A
6 B
D8(A), D9(B)
Junction Connector
9 A
7 A
A9(A)
Junction Connector
W
(*2)
L–R
G–R
G
D3
D1
A3

Rear Fog Light

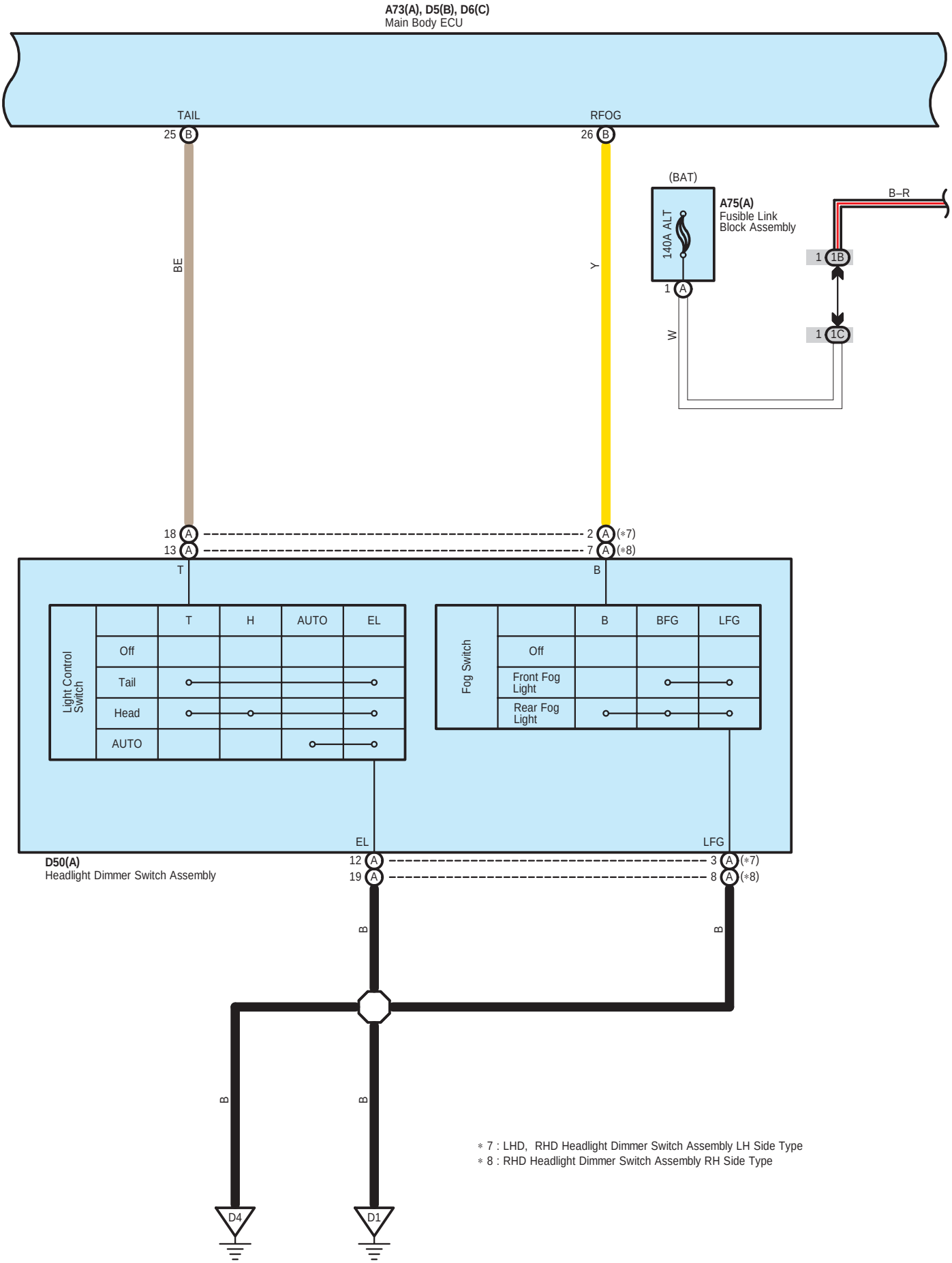

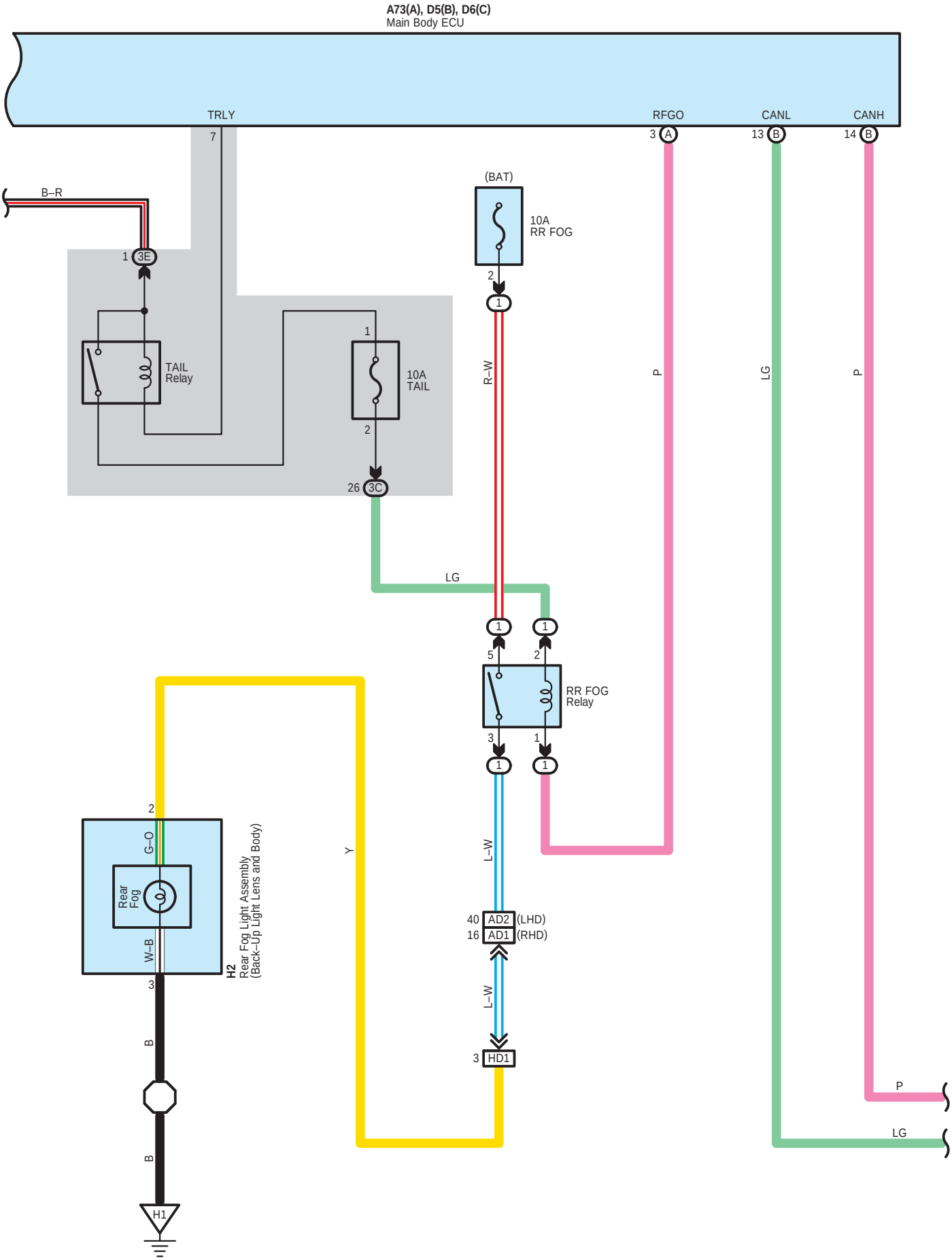
A73(A), D5(B), D6(C)
Main Body ECU
TRLY
7
RFGO
3 A
CANL
13 B
CANH
14 B
B–R
1 3E
TAIL
Relay
1
10A
TAIL
2
26 3C
(BAT)
10A
RR FOG
2
1
R–W
P
LG
P
LG
1
1
5
2
RR FOG
Relay
3
1
1
1
L–W
40 AD2 (LHD)
16 AD1 (RHD)
L–W
3 HD1
Y
2
G–O
Rear
Fog
W–B
3
H2
Rear Fog Light Assembly
(Back–Up Light Lens and Body)
B
B
H1
P
LG

Rear Fog Light

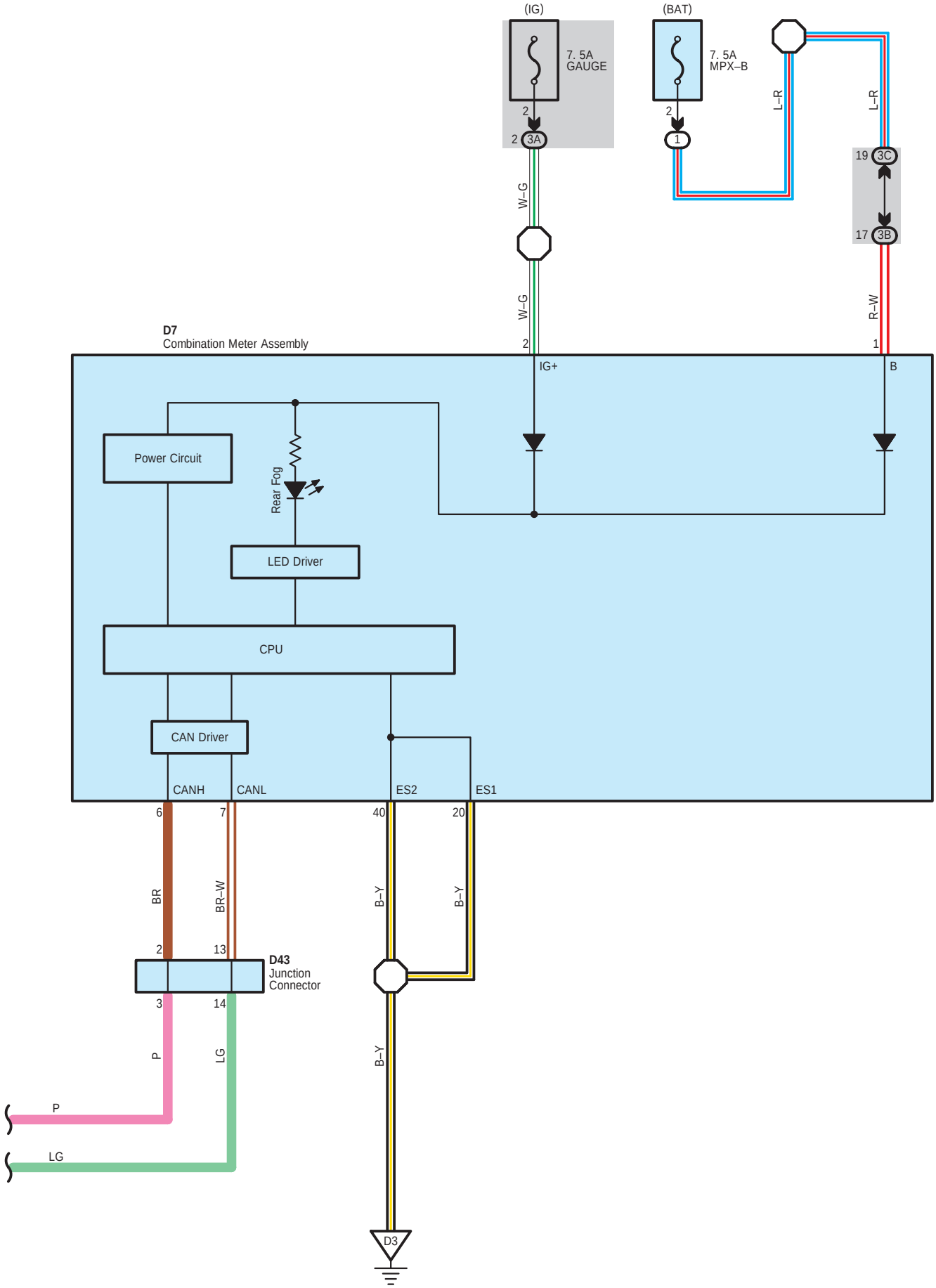

○ : Parts Location

Code		See Page	Code		See Page	Code		See Page
A9	A	42 (LHD)	D6	C	48 (RHD)	D17	B	40 (LHD)
		50 (RHD)	D7		40 (LHD)			48 (RHD)
A73	A	42 (LHD)			48 (RHD)	D43		41 (LHD)
		50 (RHD)	D8	A	40 (LHD)			49 (RHD)
A75	A	39 (LHD)			48 (RHD)	D50	A	41 (LHD)
		47 (RHD)	D9	B	40 (LHD)			49 (RHD)
D5	B	40 (LHD)			48 (RHD)	H2		45 (LHD)
		48 (RHD)	D16	A	40 (LHD)			53 (RHD)
D6	C	40 (LHD)			48 (RHD)			

⬭ : Relay Blocks

Code	See Page	Relay Blocks (Relay Block Location)
1	24	Engine Room R/B (Engine Compartment Right)

⬭ : Junction Block and Wire Harness Connector

Code	See Page	Junction Block and Wire Harness (Connector Location)
1B	24	Engine Room Main Wire and Engine Room J/B (Engine Compartment Right)
1C		
3A	26	Instrument Panel Wire and Instrument Panel J/B Assembly (Instrument Panel Reinforcement)
3B		
3C	26	Engine Room Main Wire and Instrument Panel J/B Assembly (Instrument Panel Reinforcement)
3E		

▭ : Connector Joining Wire Harness and Wire Harness

Code	See Page	Joining Wire Harness and Wire Harness (Connector Location)
AD1	59 (RHD)	Engine Room Main Wire and Instrument Panel Wire (Cowl Side Panel RH)
AD2	55 (LHD)	Engine Room Main Wire and Instrument Panel Wire (Instrument Panel Reinforcement)
HD1	55 (LHD)	No. 2 Floor Wire and Instrument Panel Wire (Cowl Side Panel LH)
	59 (RHD)	

▽ : Ground Points

Code	See Page	Ground Points Location
A3	55 (LHD)	Cowl Side Panel RH
	59 (RHD)	Cowl Side Panel LH
D1	55 (LHD)	
	59 (RHD)	Cowl Side Panel RH
D3	55 (LHD)	Instrument Panel Brace RH
	59 (RHD)	Instrument Panel Brace LH
D4	55 (LHD)	Cowl Side Panel RH
	59 (RHD)	Cowl Side Panel LH
H1	56 (LHD)	Lower Back Panel
	60 (RHD)	

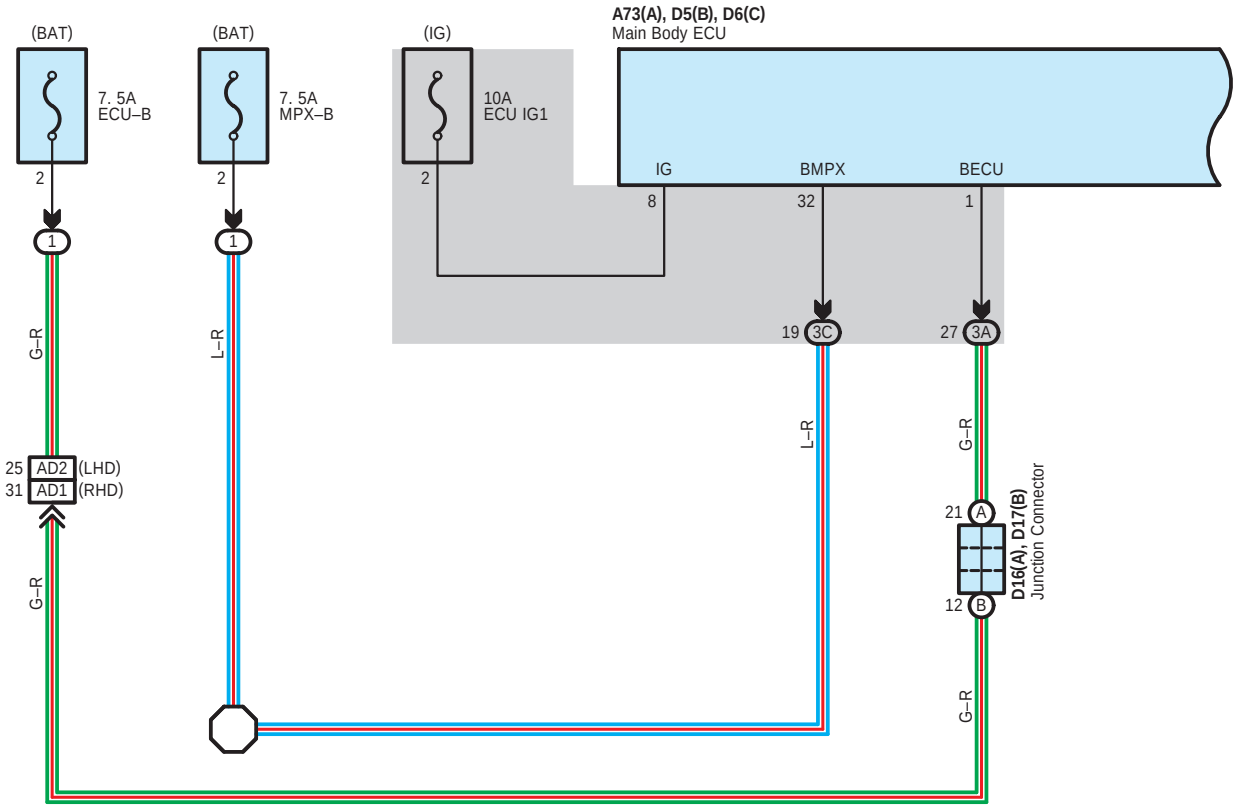
(BAT)
7. 5A
ECU–B
2
1
G–R
25 AD2 (LHD)
31 AD1 (RHD)
G–R
(BAT)
7. 5A
MPX–B
2
1
L–R
(IG)
10A
ECU IG1
2
A73(A), D5(B), D6(C)
Main Body ECU
IG
8
BMPX
32
BECU
1
19 3C
27 3A
L–R
G–R
21 A
12 B
D16(A), D17(B)
Junction Connector
G–R

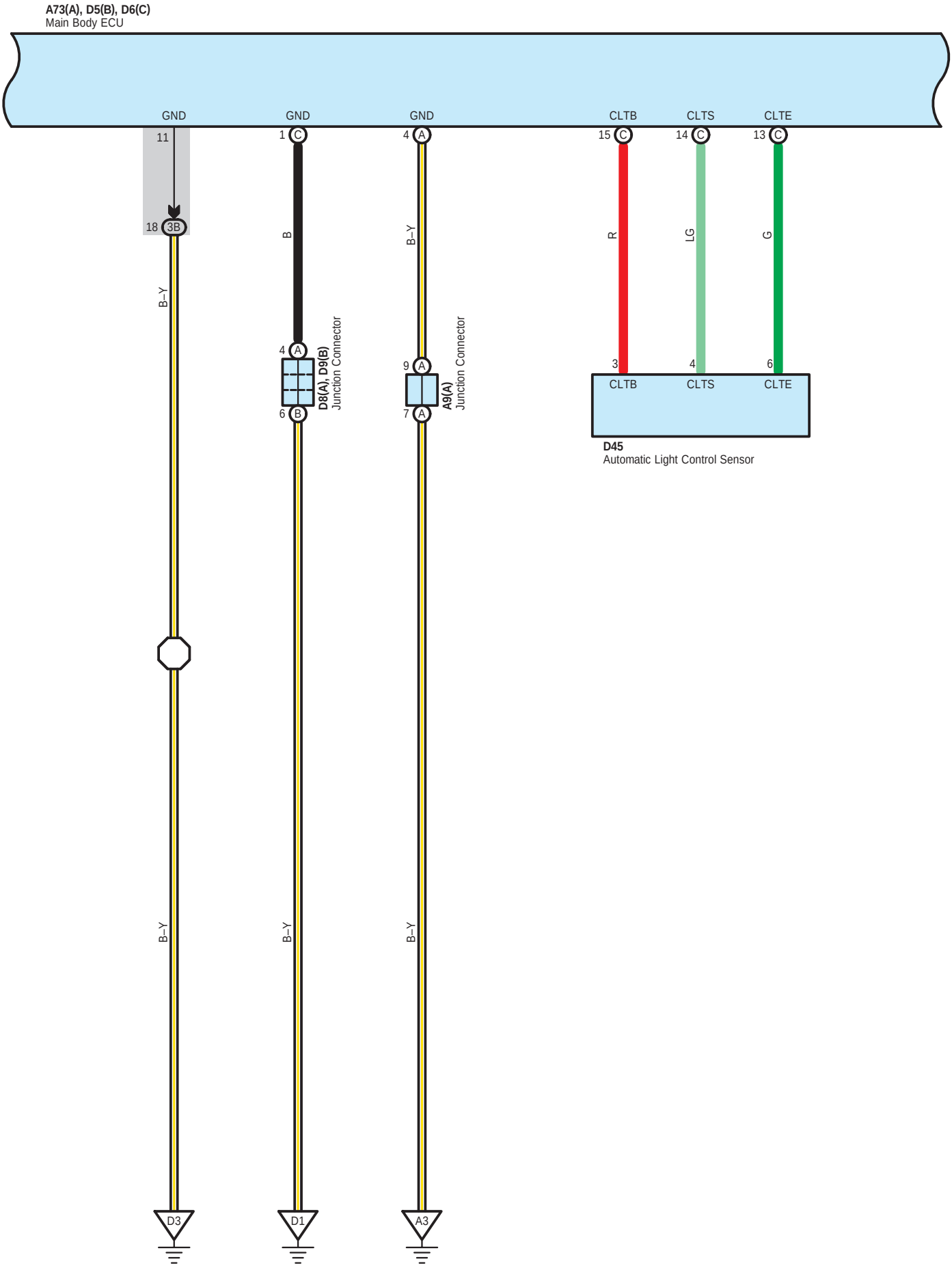
A73(A), D5(B), D6(C)
Main Body ECU
GND
GND
GND
CLTB
CLTS
CLTE
11
18 3B
B–Y
B–Y
1 C
B
4 A
6 B
D8(A), D9(B)
Junction Connector
4 A
9 A
7 A
B–Y
A9(A)
Junction Connector
15 C
14 C
13 C
R
LG
G
3
4
6
CLTB
CLTS
CLTE
D45
Automatic Light Control Sensor
B–Y
B–Y
B–Y
D3
D1
A3

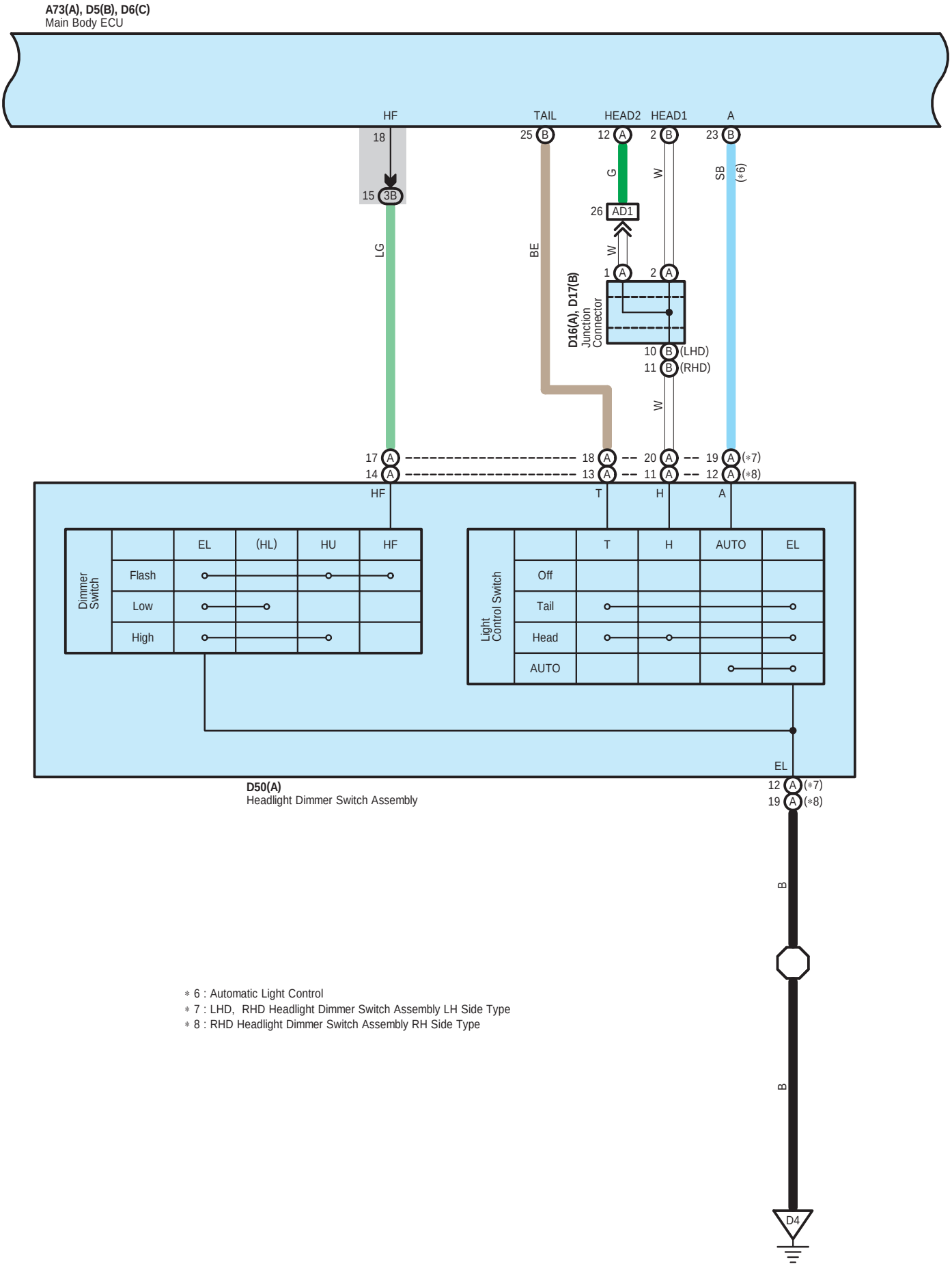

* 6 : Automatic Light Control
* 7 : LHD, RHD Headlight Dimmer Switch Assembly LH Side Type
* 8 : RHD Headlight Dimmer Switch Assembly RH Side Type

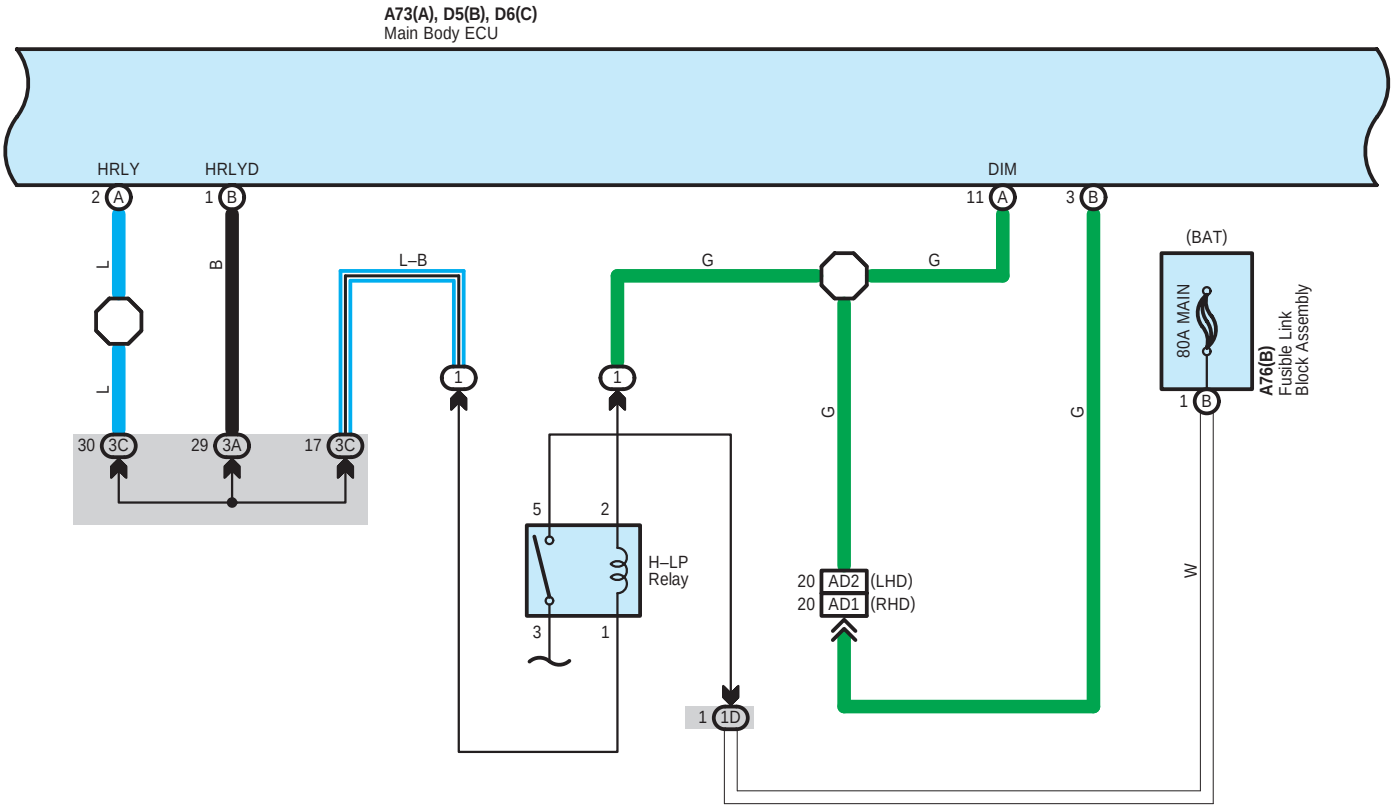
A73(A), D5(B), D6(C)
Main Body ECU
HRLY
HRLYD
DIM
2 A
1 B
11 A
3 B
L
B
L–B
G
G
G
G
W
(BAT)
80A MAIN
A76(B)
Fusible Link
Block Assembly
1 B
1
1
30 3C
29 3A
17 3C
5
2
3
1
H–LP
Relay
20 AD2 (LHD)
20 AD1 (RHD)
1 1D

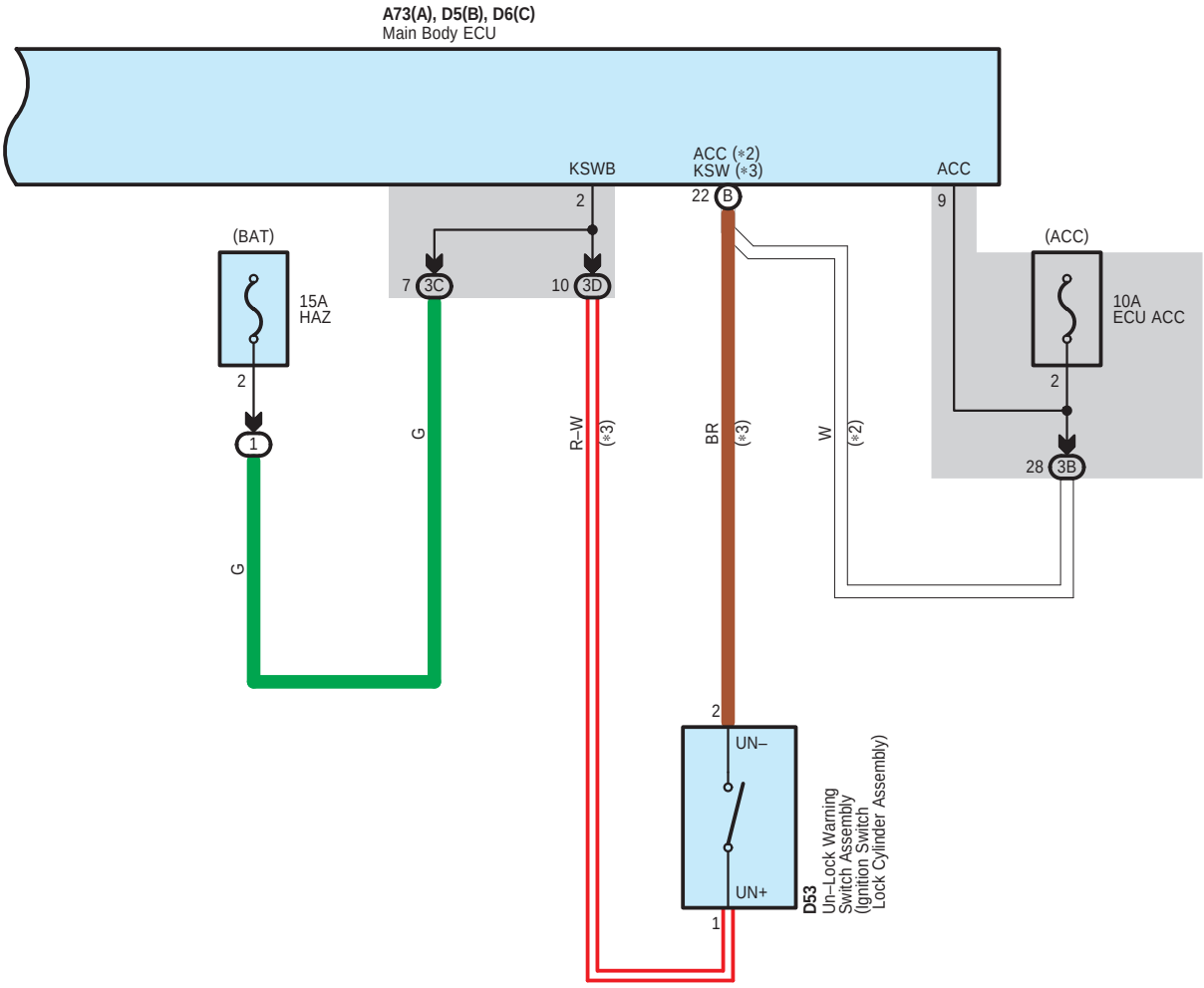

* 2 : w/ Entry & Start System
* 3 : w/o Entry & Start System

○ : **Parts Location**

Code		See Page	Code		See Page	Code		See Page
A9	A	42 (LHD)	D6	C	40 (LHD)	D17	B	40 (LHD)
		50 (RHD)			48 (RHD)			48 (RHD)
A73	A	42 (LHD)	D8	A	40 (LHD)	D45		41 (LHD)
		50 (RHD)			48 (RHD)			49 (RHD)
A76	B	39 (LHD)	D9	B	40 (LHD)	D50	A	41 (LHD)
		47 (RHD)			48 (RHD)			49 (RHD)
D5	B	40 (LHD)	D16	A	40 (LHD)	D53		41 (LHD)
		48 (RHD)			48 (RHD)			49 (RHD)

⬭ : **Relay Blocks**

Code	See Page	Relay Blocks (Relay Block Location)
1	24	Engine Room R/B (Engine Compartment Right)

⬭ : **Junction Block and Wire Harness Connector**

Code	See Page	Junction Block and Wire Harness (Connector Location)
1D	24	Engine Room Main Wire and Engine Room J/B (Engine Compartment Right)
3A	26	Instrument Panel Wire and Instrument Panel J/B Assembly (Instrument Panel Reinforcement)
3B		
3C	26	Engine Room Main Wire and Instrument Panel J/B Assembly (Instrument Panel Reinforcement)
3D	26	Instrument Panel Wire and Instrument Panel J/B Assembly (Instrument Panel Reinforcement)

▭ : **Connector Joining Wire Harness and Wire Harness**

Code	See Page	Joining Wire Harness and Wire Harness (Connector Location)
AD1	55 (LHD)	Engine Room Main Wire and Instrument Panel Wire (Cowl Side Panel RH)
	59 (RHD)	
AD2	55 (LHD)	Engine Room Main Wire and Instrument Panel Wire (Instrument Panel Reinforcement)

▽ : **Ground Points**

Code	See Page	Ground Points Location
A3	55 (LHD)	Cowl Side Panel RH
	59 (RHD)	Cowl Side Panel LH
D1	55 (LHD)	
	59 (RHD)	Cowl Side Panel RH
D3	55 (LHD)	Instrument Panel Brace RH
	59 (RHD)	Instrument Panel Brace LH
D4	55 (LHD)	Cowl Side Panel RH
	59 (RHD)	Cowl Side Panel LH

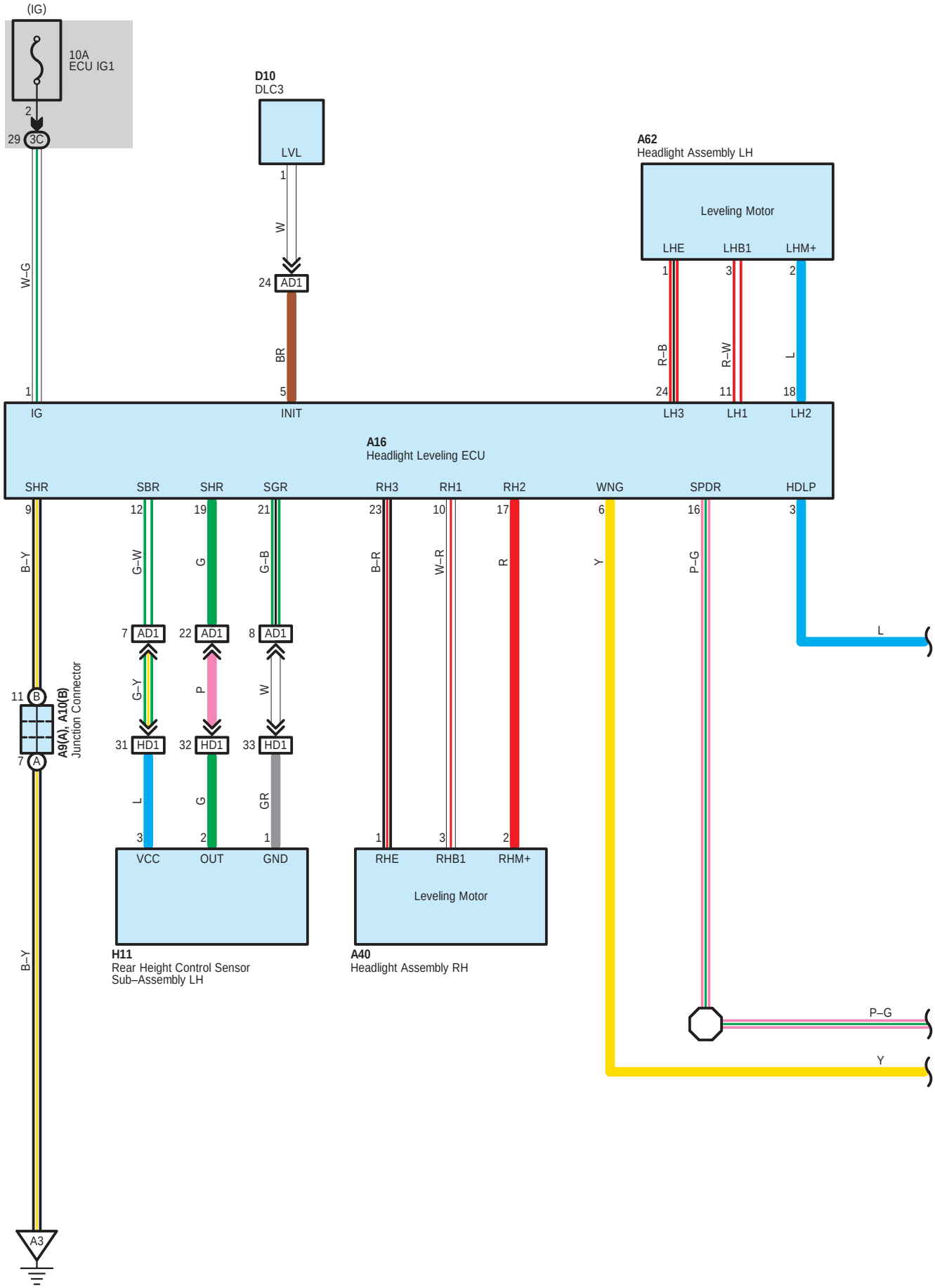
(IG)
10A
ECU IG1
2
29 3C
W–G
1
IG
D10
DLC3
LVL
1
W
24 AD1
BR
5
INIT
A62
Headlight Assembly LH
Leveling Motor
LHE
LHB1
LHM+
1
3
2
R–B
R–W
L
24
11
18
LH3
LH1
LH2
A16
Headlight Leveling ECU
SHR
SBR
SHR
SGR
RH3
RH1
RH2
WNG
SPDR
HDLP
9
12
19
21
23
10
17
6
16
3
B–Y
G–W
G
G–B
B–R
W–R
R
Y
P–G
L
7 AD1
22 AD1
8 AD1
G–Y
P
W
11 B
7 A
A9(A), A10(B)
Junction Connector
31 HD1
32 HD1
33 HD1
L
G
GR
3
2
1
VCC
OUT
GND
H11
Rear Height Control Sensor
Sub–Assembly LH
1
3
2
RHE
RHB1
RHM+
Leveling Motor
A40
Headlight Assembly RH
P–G
Y
B–Y
A3

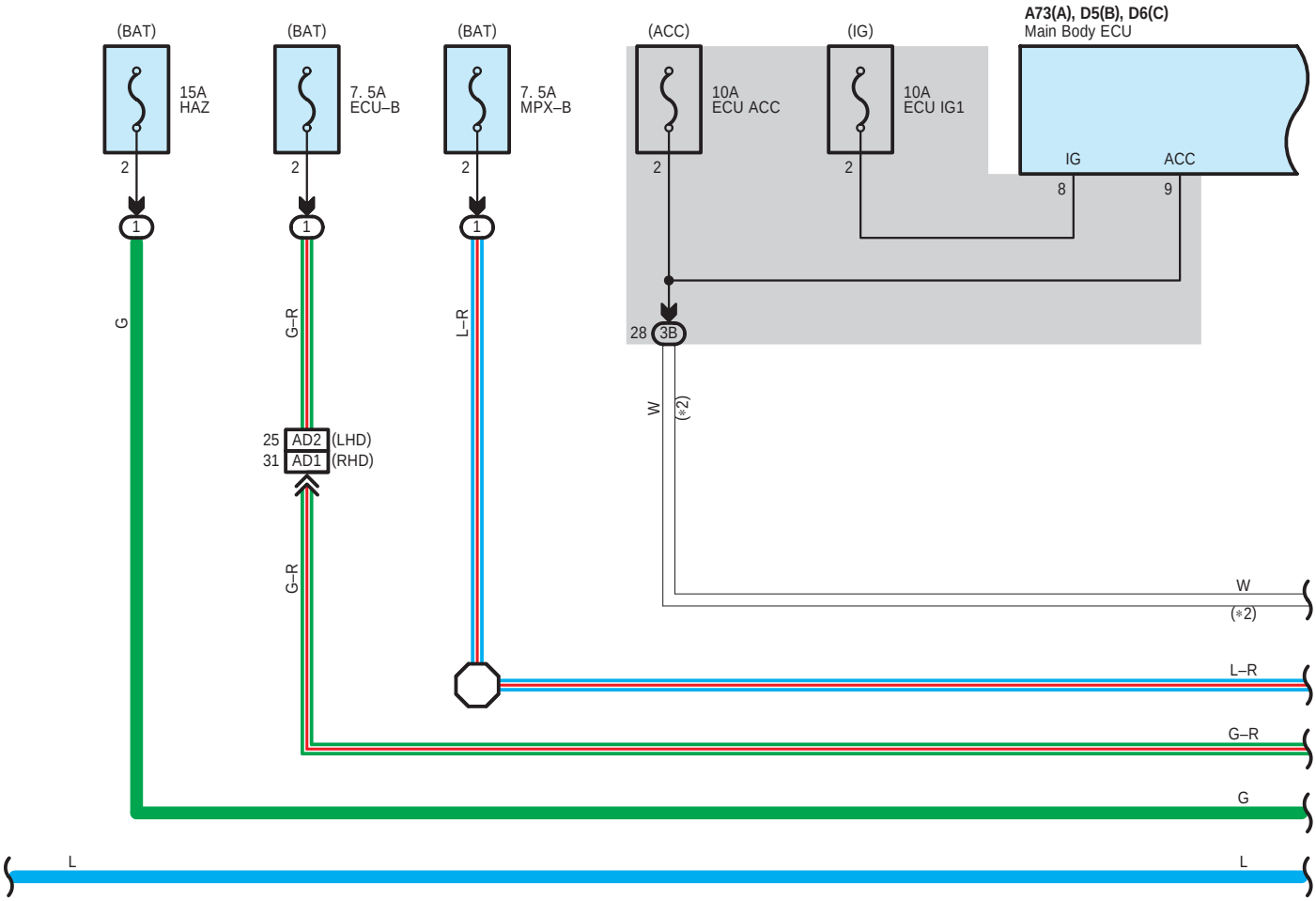

* 2 : w/ Entry & Start System

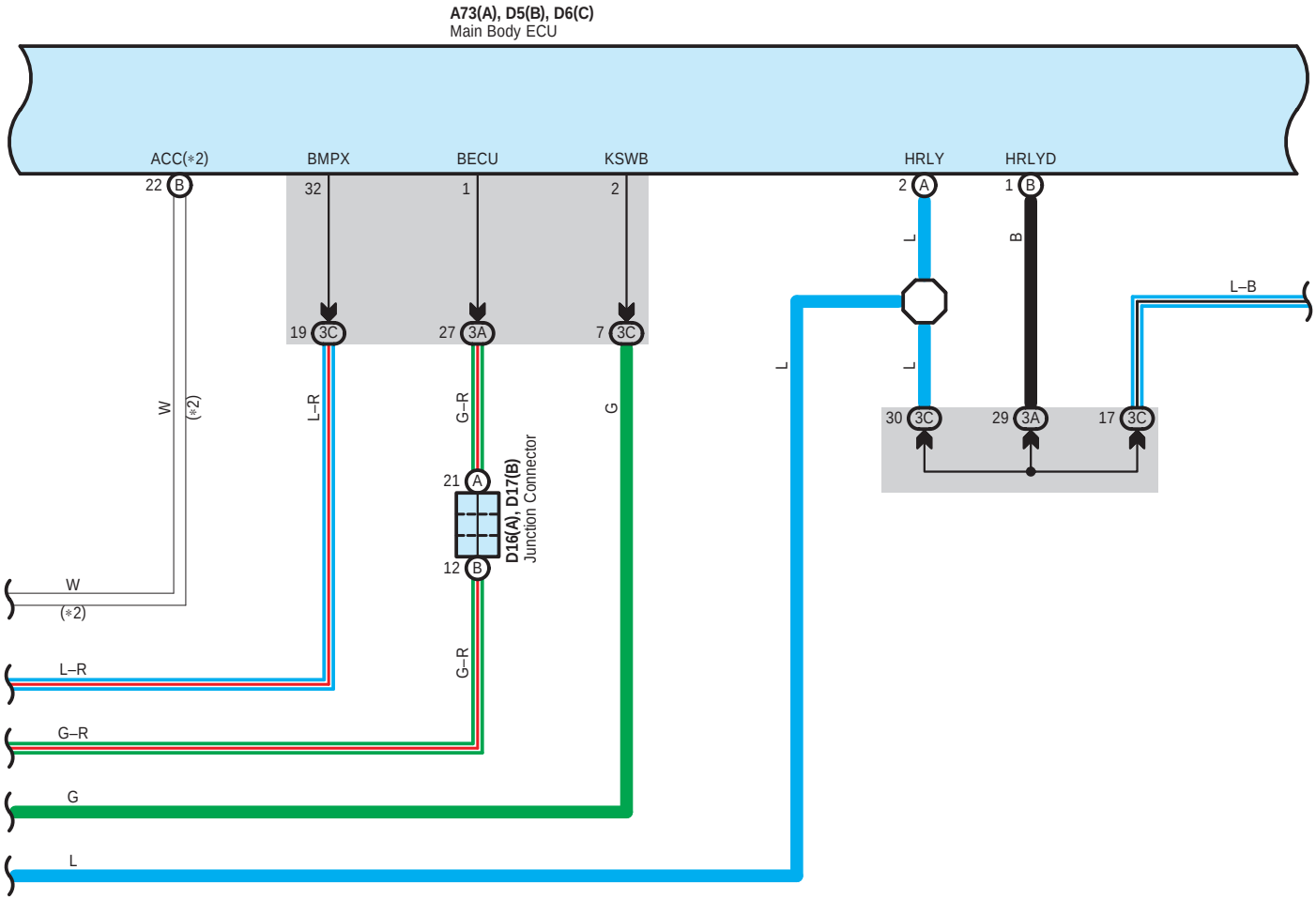
A73(A), D5(B), D6(C)
Main Body ECU
ACC(*2)
BMPX
BECU
KSWB
HRLY
HRLYD
22 B
32
1
2
2 A
1 B
L
B
L–B
19 3C
27 3A
7 3C
L
L
30 3C
29 3A
17 3C
W
(*2)
L–R
G–R
G
21 A
12 B
D16(A), D17(B)
Junction Connector
W
(*2)
L–R
G–R
G
L
G–R

P–G
P–G
Y
Y

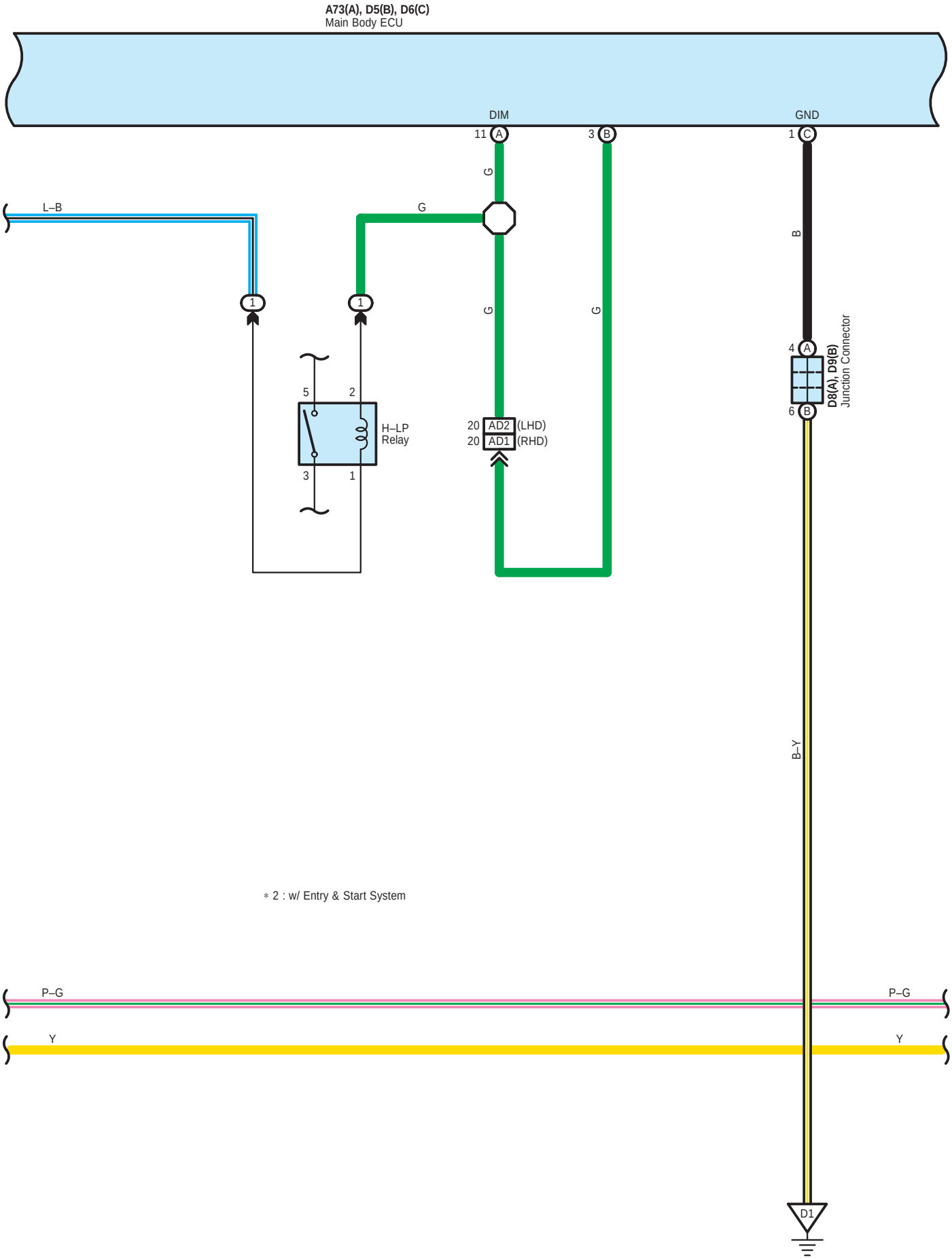
A73(A), D5(B), D6(C)
Main Body ECU
DIM
GND
11 A
3 B
1 C
G
L–B
B
1
5
2
3
1
H–LP
Relay
20 AD2 (LHD)
20 AD1 (RHD)
4 A
6 B
D8(A), D9(B)
Junction Connector
B–Y
∗ 2 : w/ Entry & Start System
P–G
Y
D1

Headlight Beam Level Control

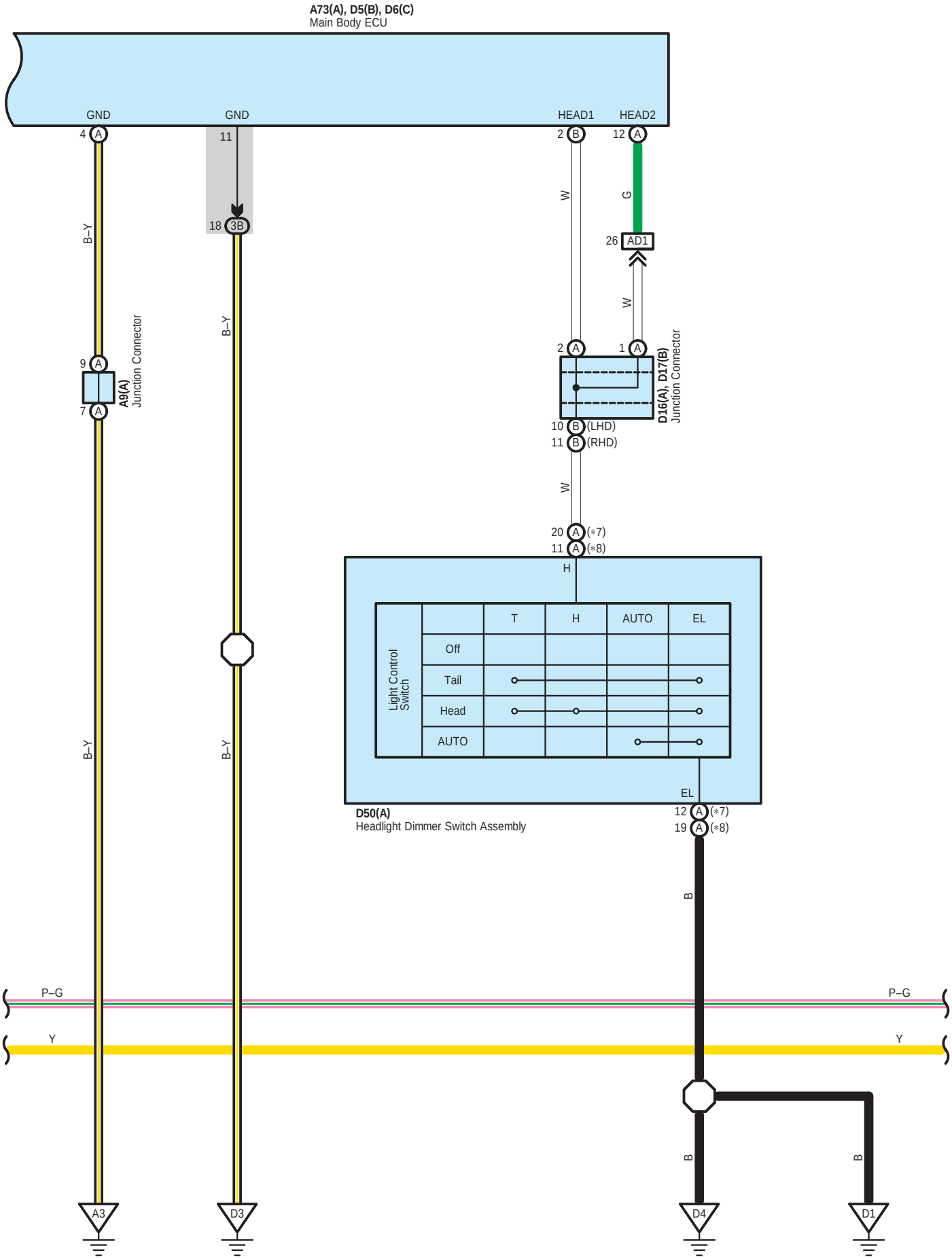

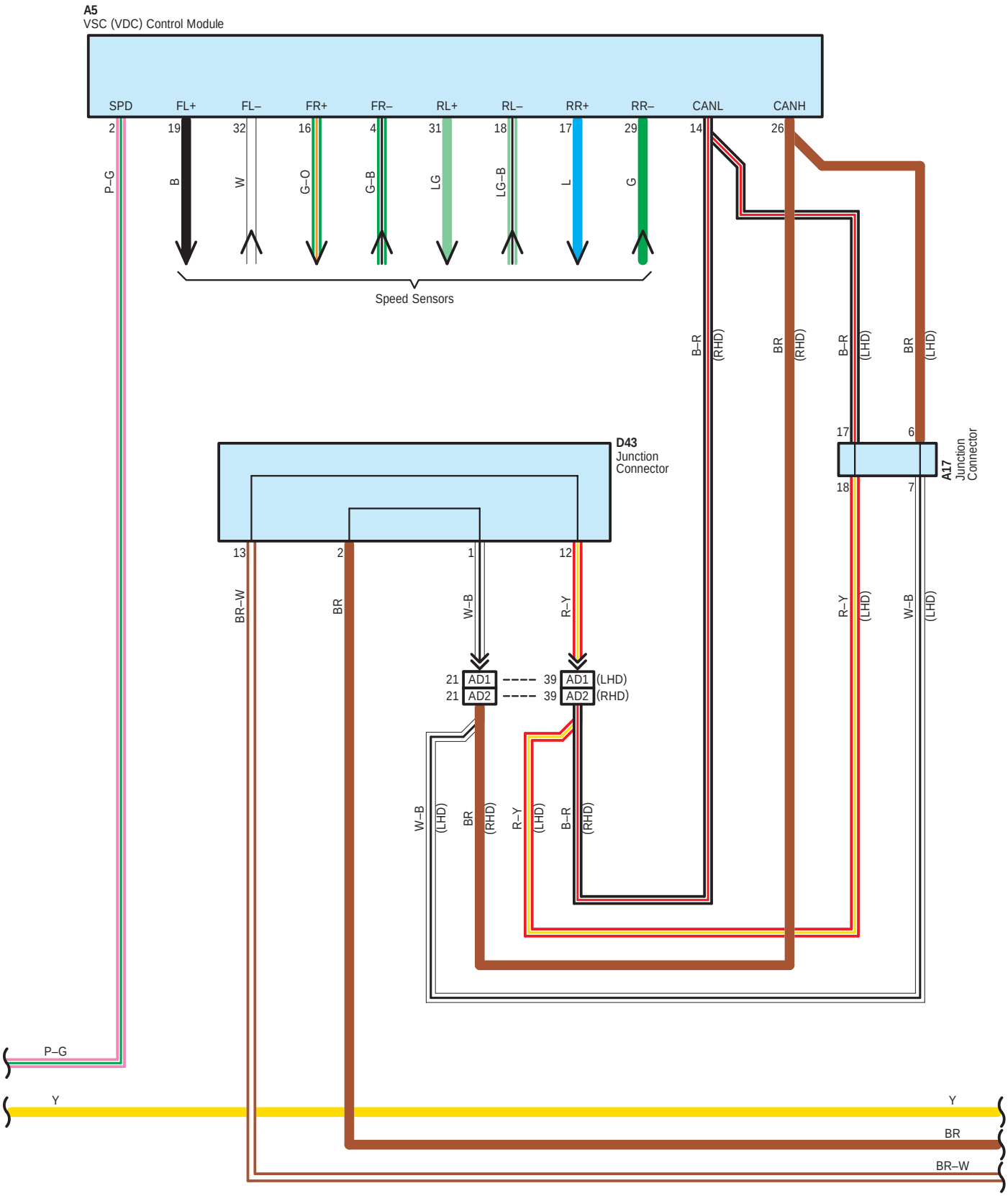

＊7 : LHD, RHD Headlight Dimmer Switch Assembly LH Side Type
＊8 : RHD Headlight Dimmer Switch Assembly RH Side Type

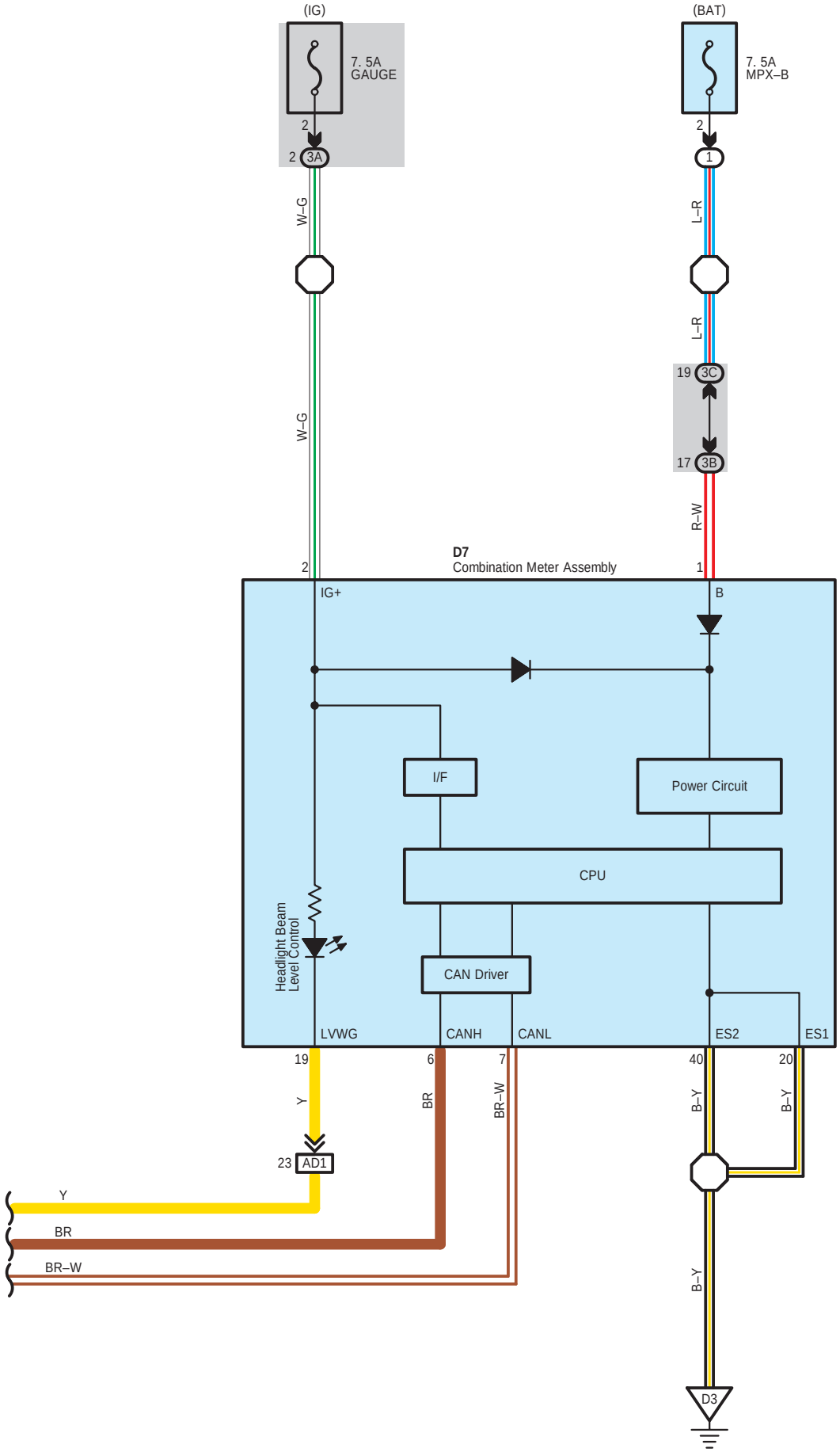
(IG)
7. 5A
GAUGE
2
2 3A
W–G
W–G
2
(BAT)
7. 5A
MPX–B
2
1
L–R
L–R
19 3C
17 3B
R–W
D7
Combination Meter Assembly
1
IG+
B
I/F
Power Circuit
CPU
Headlight Beam
Level Control
CAN Driver
LVWG
CANH
CANL
ES2
ES1
19
6
7
40
20
Y
BR
BR–W
B–Y
B–Y
23 AD1
Y
BR
BR–W
B–Y
D3

○ : Parts Location

Code		See Page	Code		See Page	Code		See Page
A5		39 (LHD)	A73	A	42 (LHD)	D10		48 (RHD)
		47 (RHD)			50 (RHD)	D16	A	40 (LHD)
A9	A	42 (LHD)	D5	B	40 (LHD)			48 (RHD)
		50 (RHD)			48 (RHD)	D17	B	40 (LHD)
A10	B	42 (LHD)	D6	C	40 (LHD)			48 (RHD)
		50 (RHD)			48 (RHD)	D43		41 (LHD)
A16		42 (LHD)	D7		40 (LHD)			49 (RHD)
		50 (RHD)			48 (RHD)	D50	A	41 (LHD)
A17		42 (LHD)	D8	A	40 (LHD)			49 (RHD)
A40		39 (LHD)			48 (RHD)	H11		45 (LHD)
		47 (RHD)	D9	B	40 (LHD)			53 (RHD)
A62		39 (LHD)			48 (RHD)			
		47 (RHD)	D10		40 (LHD)			

⬭ : Relay Blocks

Code	See Page	Relay Blocks (Relay Block Location)
1	24	Engine Room R/B (Engine Compartment Right)

⬭ : Junction Block and Wire Harness Connector

Code	See Page	Junction Block and Wire Harness (Connector Location)
3A	26	Instrument Panel Wire and Instrument Panel J/B Assembly (Instrument Panel Reinforcement)
3B		
3C	26	Engine Room Main Wire and Instrument Panel J/B Assembly (Instrument Panel Reinforcement)

▭ : Connector Joining Wire Harness and Wire Harness

Code	See Page	Joining Wire Harness and Wire Harness (Connector Location)
AD1	55 (LHD)	Engine Room Main Wire and Instrument Panel Wire (Cowl Side Panel RH)
	59 (RHD)	
AD2	55 (LHD)	Engine Room Main Wire and Instrument Panel Wire (Instrument Panel Reinforcement)
	59 (RHD)	
HD1	55 (LHD)	No. 2 Floor Wire and Instrument Panel Wire (Cowl Side Panel LH)
	59 (RHD)	

▽ : Ground Points

Code	See Page	Ground Points Location
A3	55 (LHD)	Cowl Side Panel RH
	59 (RHD)	Cowl Side Panel LH
D1	55 (LHD)	
	59 (RHD)	Cowl Side Panel RH
D3	55 (LHD)	Instrument Panel Brace RH
	59 (RHD)	Instrument Panel Brace LH
D4	55 (LHD)	Cowl Side Panel RH
	59 (RHD)	Cowl Side Panel LH

Headlight Cleaner

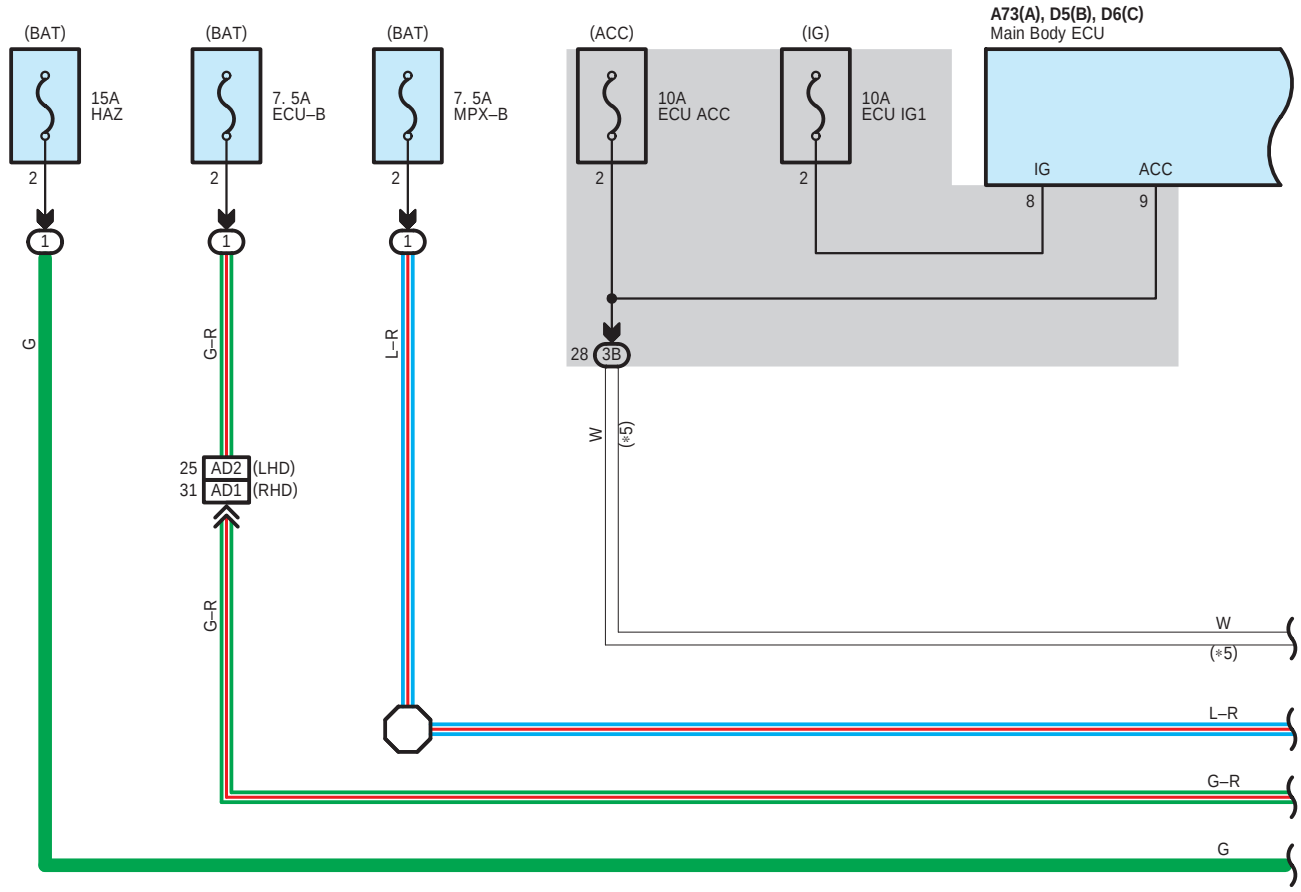

* 5 : w/ Entry & Start System

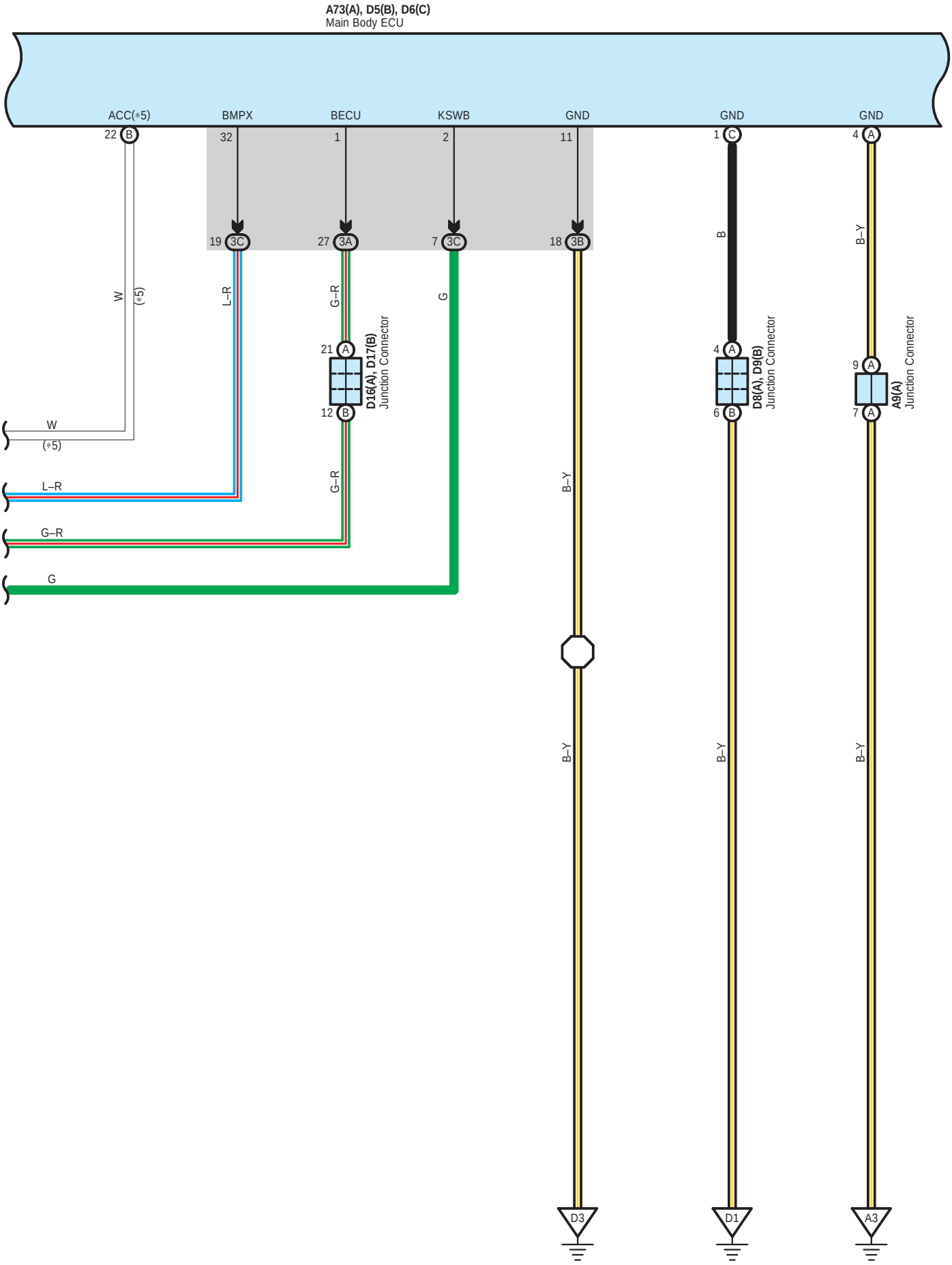
A73(A), D5(B), D6(C)
Main Body ECU
ACC(*5)
BMPX
BECU
KSWB
GND
GND
GND
22 B
32
1
2
11
1 C
4 A
19 3C
27 3A
7 3C
18 3B
W
(*5)
L–R
G–R
G
B
B–Y
21 A
12 B
D16(A), D17(B)
Junction Connector
4 A
6 B
D8(A), D9(B)
Junction Connector
9 A
7 A
A9(A)
Junction Connector
W
(*5)
L–R
G–R
G
B–Y
B–Y
B–Y
B–Y
D3
D1
A3

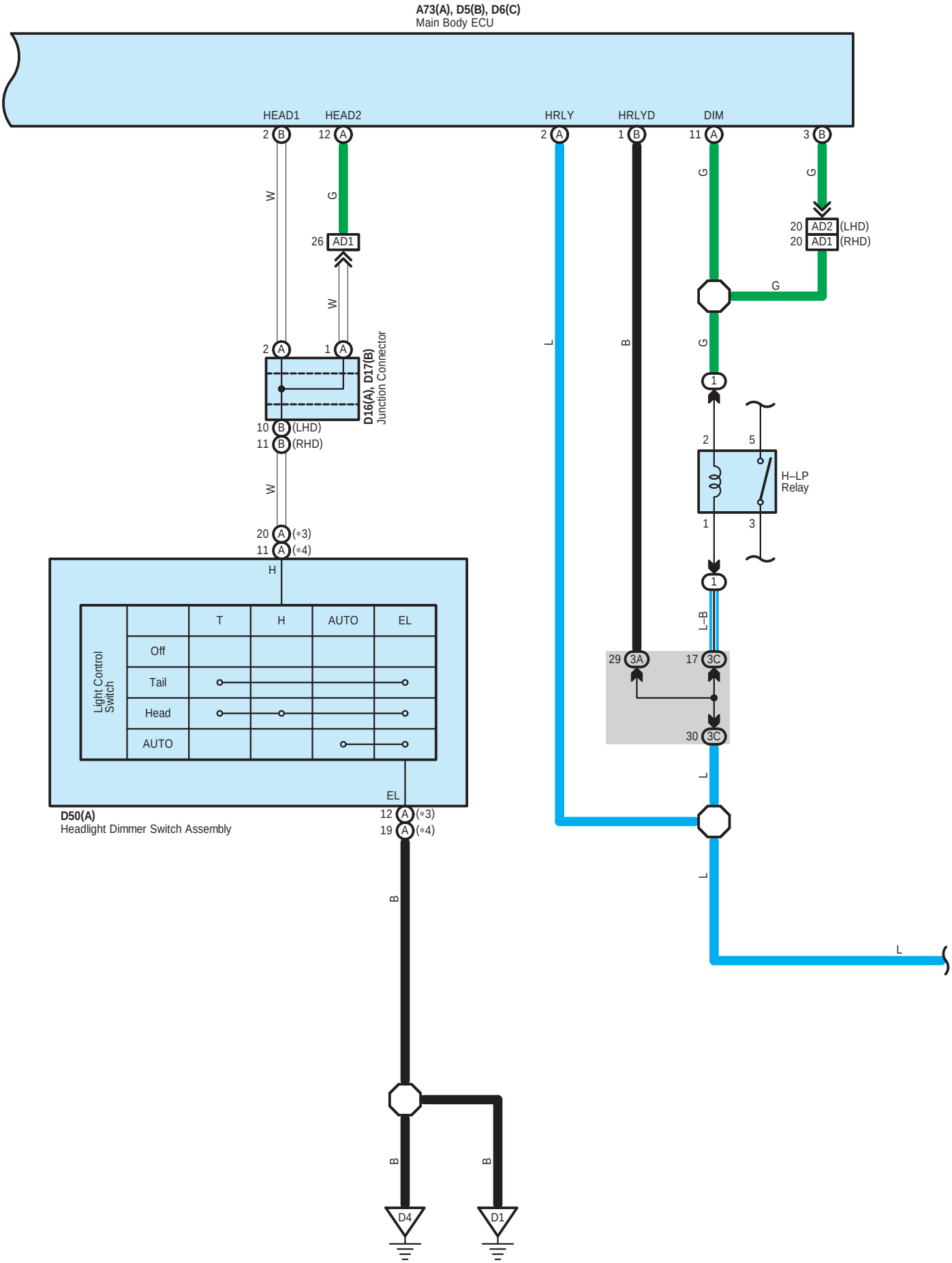
A73(A), D5(B), D6(C)
Main Body ECU
HEAD1
HEAD2
HRLY
HRLYD
DIM
2 B
12 A
2 A
1 B
11 A
3 B
W
G
26 AD1
20 AD2 (LHD)
20 AD1 (RHD)
2 A
1 A
D16(A), D17(B)
Junction Connector
10 B (LHD)
11 B (RHD)
L
B
1
2
5
H–LP
Relay
1
3
20 A (*3)
11 A (*4)
H
T
H
AUTO
EL
Light Control Switch
Off
Tail
Head
AUTO
L–B
29 3A
17 3C
30 3C
EL
12 A (*3)
19 A (*4)
D50(A)
Headlight Dimmer Switch Assembly
D4
D1

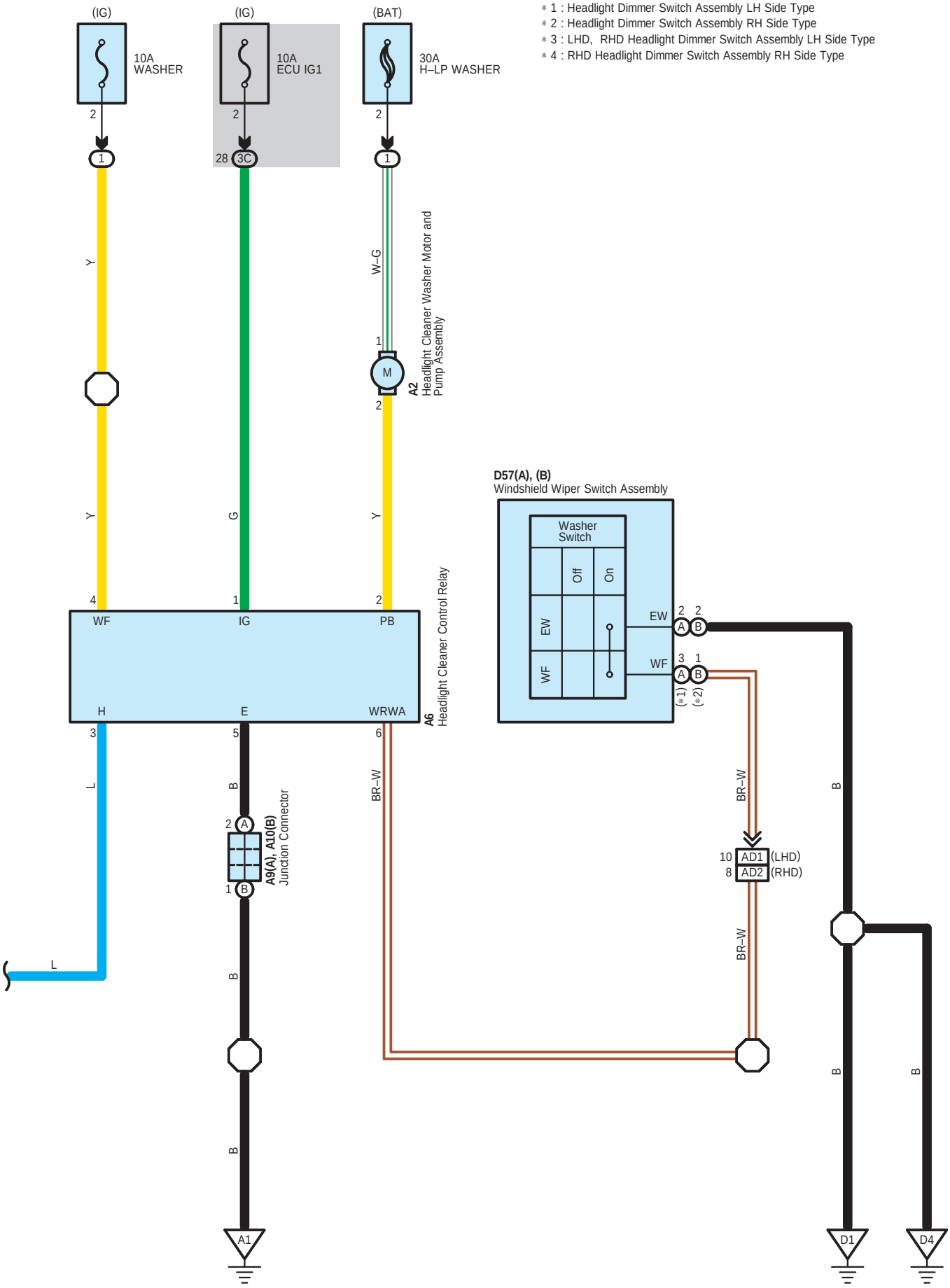
(IG)
10A
WASHER
(IG)
10A
ECU IG1
(BAT)
30A
H–LP WASHER
* 1 : Headlight Dimmer Switch Assembly LH Side Type
* 2 : Headlight Dimmer Switch Assembly RH Side Type
* 3 : LHD, RHD Headlight Dimmer Switch Assembly LH Side Type
* 4 : RHD Headlight Dimmer Switch Assembly RH Side Type
W–G
A2
Headlight Cleaner Washer Motor and Pump Assembly
D57(A), (B)
Windshield Wiper Switch Assembly
Washer Switch
Off
On
EW
WF
WF
IG
PB
H
E
WRWA
A6
Headlight Cleaner Control Relay
A9(A), A10(B)
Junction Connector
BR–W
AD1 (LHD)
AD2 (RHD)
A1
D1
D4

Headlight Cleaner

○ : **Parts Location**

Code		See Page	Code		See Page	Code		See Page
A2		39 (LHD)	A73	A	50 (RHD)	D16	A	40 (LHD)
		47 (RHD)	D5	B	40 (LHD)			48 (RHD)
A6		39 (LHD)			48 (RHD)	D17	B	40 (LHD)
		47 (RHD)	D6	C	40 (LHD)			48 (RHD)
A9	A	42 (LHD)			48 (RHD)	D50	A	41 (LHD)
		50 (RHD)	D8	A	40 (LHD)			49 (RHD)
A10	B	42 (LHD)			48 (RHD)	D57	A	41 (LHD)
		50 (RHD)	D9	B	40 (LHD)			49 (RHD)
A73	A	42 (LHD)			48 (RHD)		B	49 (RHD)

⬭ : **Relay Blocks**

Code	See Page	Relay Blocks (Relay Block Location)
1	24	Engine Room R/B (Engine Compartment Right)

⬭ : **Junction Block and Wire Harness Connector**

Code	See Page	Junction Block and Wire Harness (Connector Location)
3A	26	Instrument Panel Wire and Instrument Panel J/B Assembly (Instrument Panel Reinforcement)
3B		
3C	26	Engine Room Main Wire and Instrument Panel J/B Assembly (Instrument Panel Reinforcement)

▭ : **Connector Joining Wire Harness and Wire Harness**

Code	See Page	Joining Wire Harness and Wire Harness (Connector Location)
AD1	55 (LHD)	Engine Room Main Wire and Instrument Panel Wire (Cowl Side Panel RH)
	59 (RHD)	
AD2	55 (LHD)	Engine Room Main Wire and Instrument Panel Wire (Instrument Panel Reinforcement)
	59 (RHD)	

▽ : **Ground Points**

Code	See Page	Ground Points Location
A1	54 (LHD)	Front Fender Apron LH
	58 (RHD)	
A3	55 (LHD)	Cowl Side Panel RH
	59 (RHD)	Cowl Side Panel LH
D1	55 (LHD)	
	59 (RHD)	Cowl Side Panel RH
D3	55 (LHD)	Instrument Panel Brace RH
	59 (RHD)	Instrument Panel Brace LH
D4	55 (LHD)	Cowl Side Panel RH
	59 (RHD)	Cowl Side Panel LH

Key Reminder (w/o Entry & Start System) and Light Reminder

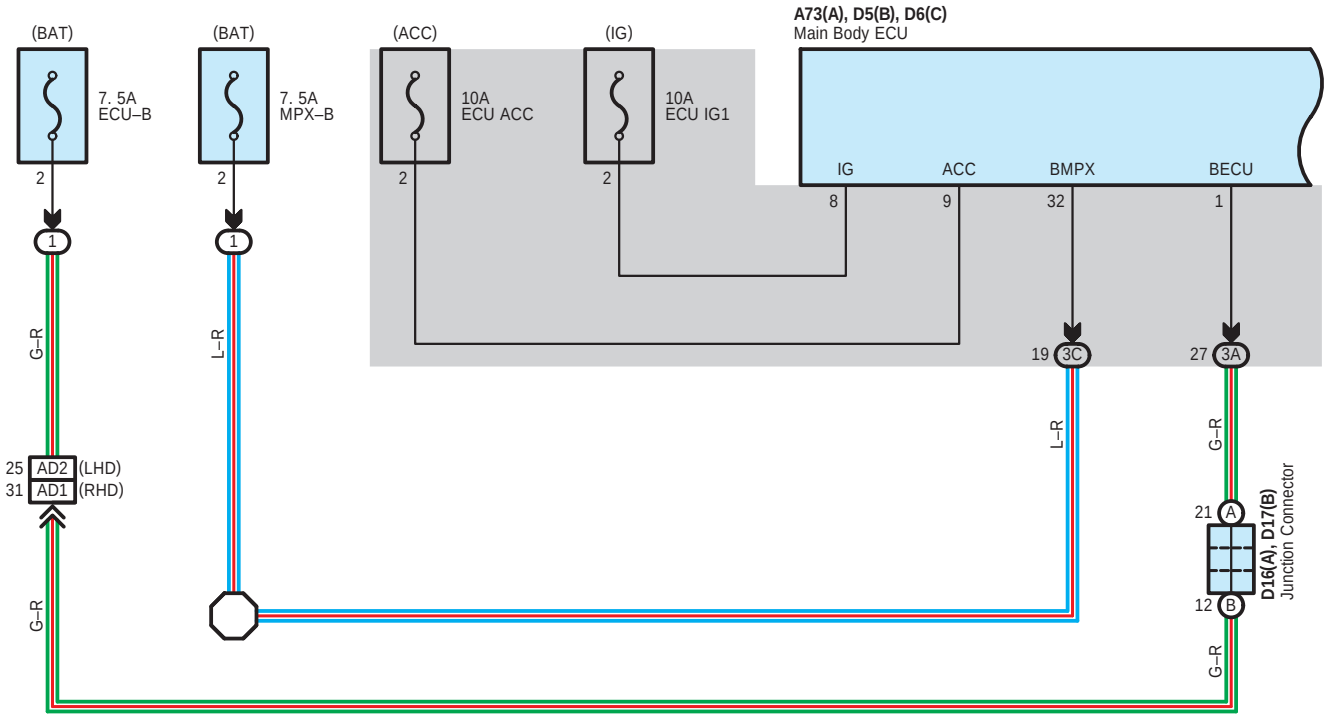

∗ 7 : LHD, RHD Headlight Dimmer Switch Assembly LH Side Type
∗ 8 : RHD Headlight Dimmer Switch Assembly RH Side Type

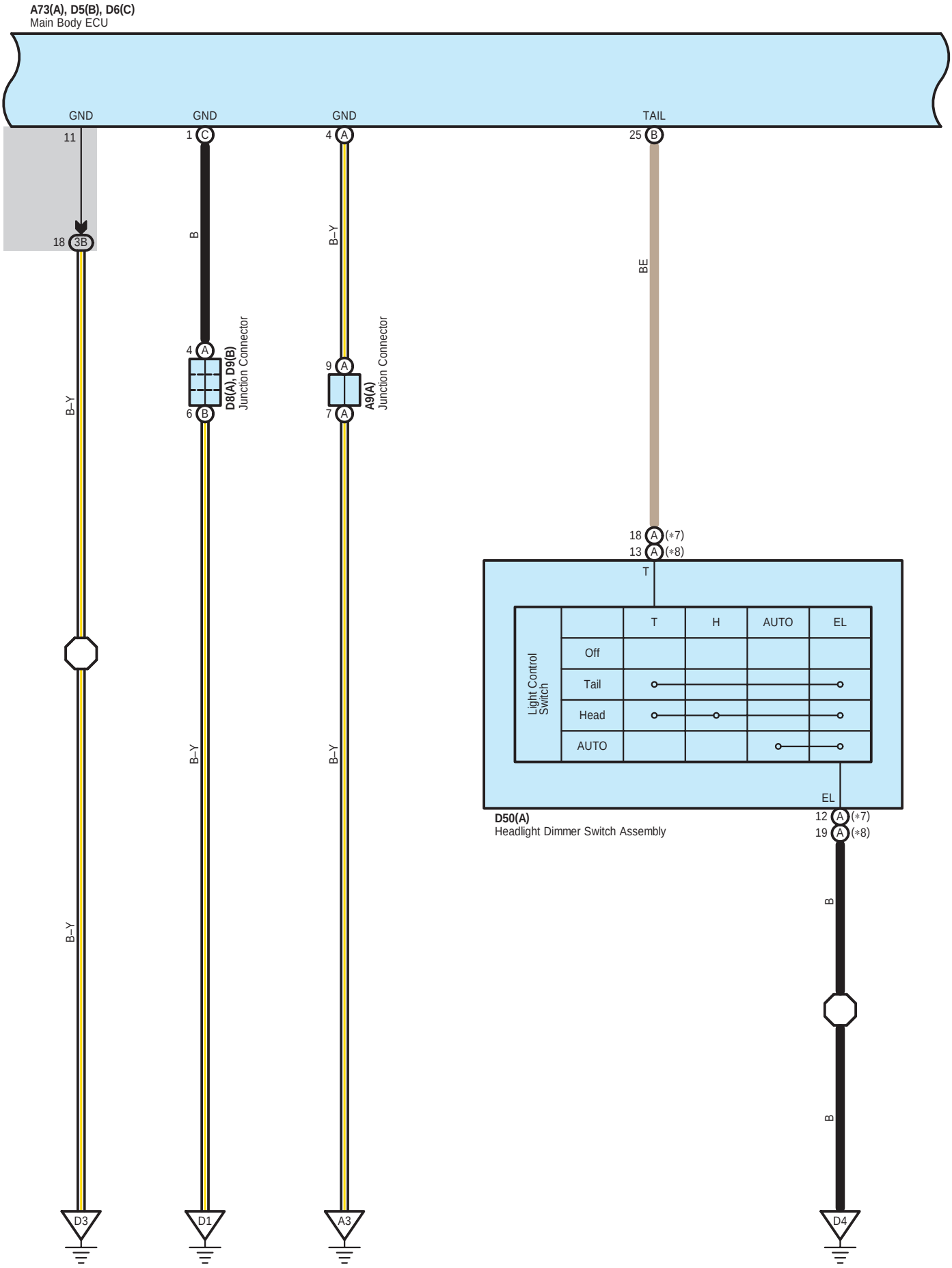
A73(A), D5(B), D6(C)
Main Body ECU
GND
GND
GND
TAIL
11
1 C
4 A
25 B
18 3B
B
B–Y
BE
4 A
9 A
D8(A), D9(B)
Junction Connector
A9(A)
Junction Connector
6 B
7 A
B–Y
18 A (*7)
13 A (*8)
T
Light Control Switch
T
H
AUTO
EL
Off
Tail
Head
AUTO
B–Y
B–Y
EL
D50(A)
Headlight Dimmer Switch Assembly
12 A (*7)
19 A (*8)
B
B–Y
B
D3
D1
A3
D4

Key Reminder (w/o Entry & Start System) and Light Reminder

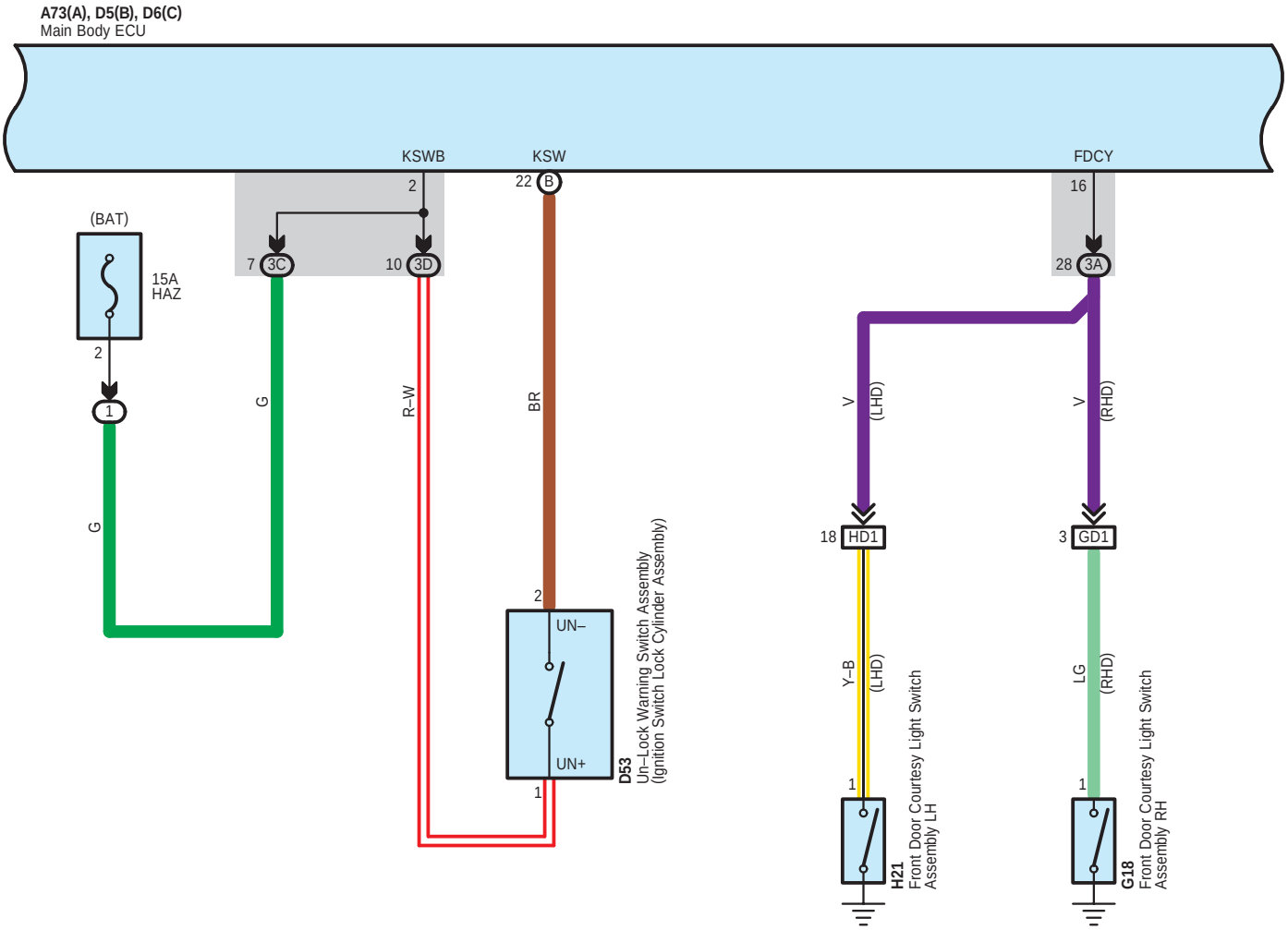

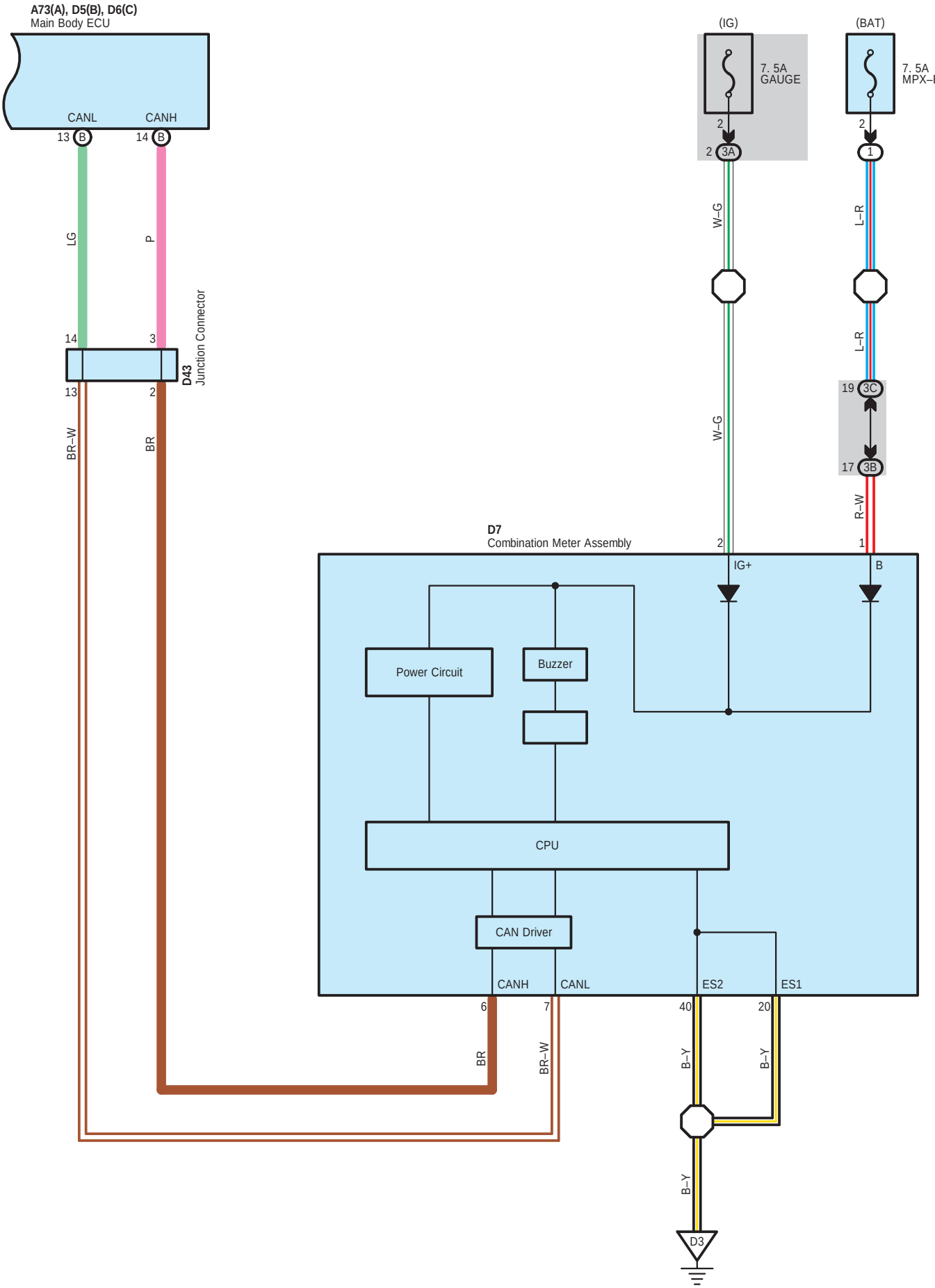
A73(A), D5(B), D6(C)
Main Body ECU
CANL
CANH
13 B
14 B
LG
P
14
3
D43
Junction Connector
13
2
BR–W
BR
(IG)
(BAT)
7. 5A
GAUGE
7. 5A
MPX–B
2
2 3A
2
1
W–G
L–R
L–R
19 3C
17 3B
W–G
R–W
D7
Combination Meter Assembly
2
1
IG+
B
Power Circuit
Buzzer
CPU
CAN Driver
CANH
CANL
ES2
ES1
6
7
40
20
BR
BR–W
B–Y
B–Y
B–Y
D3

○ : **Parts Location**

Code		See Page	Code		See Page	Code		See Page
A9	A	42 (LHD)	D7		48 (RHD)	D43		41 (LHD)
		50 (RHD)	D8	A	40 (LHD)			49 (RHD)
A73	A	42 (LHD)			48 (RHD)	D50	A	41 (LHD)
		50 (RHD)	D9	B	40 (LHD)			49 (RHD)
D5	B	40 (LHD)			48 (RHD)	D53		41 (LHD)
		48 (RHD)	D16	A	40 (LHD)			49 (RHD)
D6	C	40 (LHD)			48 (RHD)	G18		52 (RHD)
		48 (RHD)	D17	B	40 (LHD)	H21		45 (LHD)
D7		40 (LHD)			48 (RHD)			

⬭ : **Relay Blocks**

Code	See Page	Relay Blocks (Relay Block Location)
1	24	Engine Room R/B (Engine Compartment Right)

⬭ : **Junction Block and Wire Harness Connector**

Code	See Page	Junction Block and Wire Harness (Connector Location)
3A	26	Instrument Panel Wire and Instrument Panel J/B Assembly (Instrument Panel Reinforcement)
3B		
3C	26	Engine Room Main Wire and Instrument Panel J/B Assembly (Instrument Panel Reinforcement)
3D	26	Instrument Panel Wire and Instrument Panel J/B Assembly (Instrument Panel Reinforcement)

▭ : **Connector Joining Wire Harness and Wire Harness**

Code	See Page	Joining Wire Harness and Wire Harness (Connector Location)
AD1	59 (RHD)	Engine Room Main Wire and Instrument Panel Wire (Cowl Side Panel RH)
AD2	55 (LHD)	Engine Room Main Wire and Instrument Panel Wire (Instrument Panel Reinforcement)
GD1	59 (RHD)	No. 1 Floor Wire and Instrument Panel Wire (Cowl Side Panel RH)
HD1	55 (LHD)	No. 2 Floor Wire and Instrument Panel Wire (Cowl Side Panel LH)

▽ : **Ground Points**

Code	See Page	Ground Points Location
A3	55 (LHD)	Cowl Side Panel RH
	59 (RHD)	Cowl Side Panel LH
D1	55 (LHD)	
	59 (RHD)	Cowl Side Panel RH
D3	55 (LHD)	Instrument Panel Brace RH
	59 (RHD)	Instrument Panel Brace LH
D4	55 (LHD)	Cowl Side Panel RH
	59 (RHD)	Cowl Side Panel LH

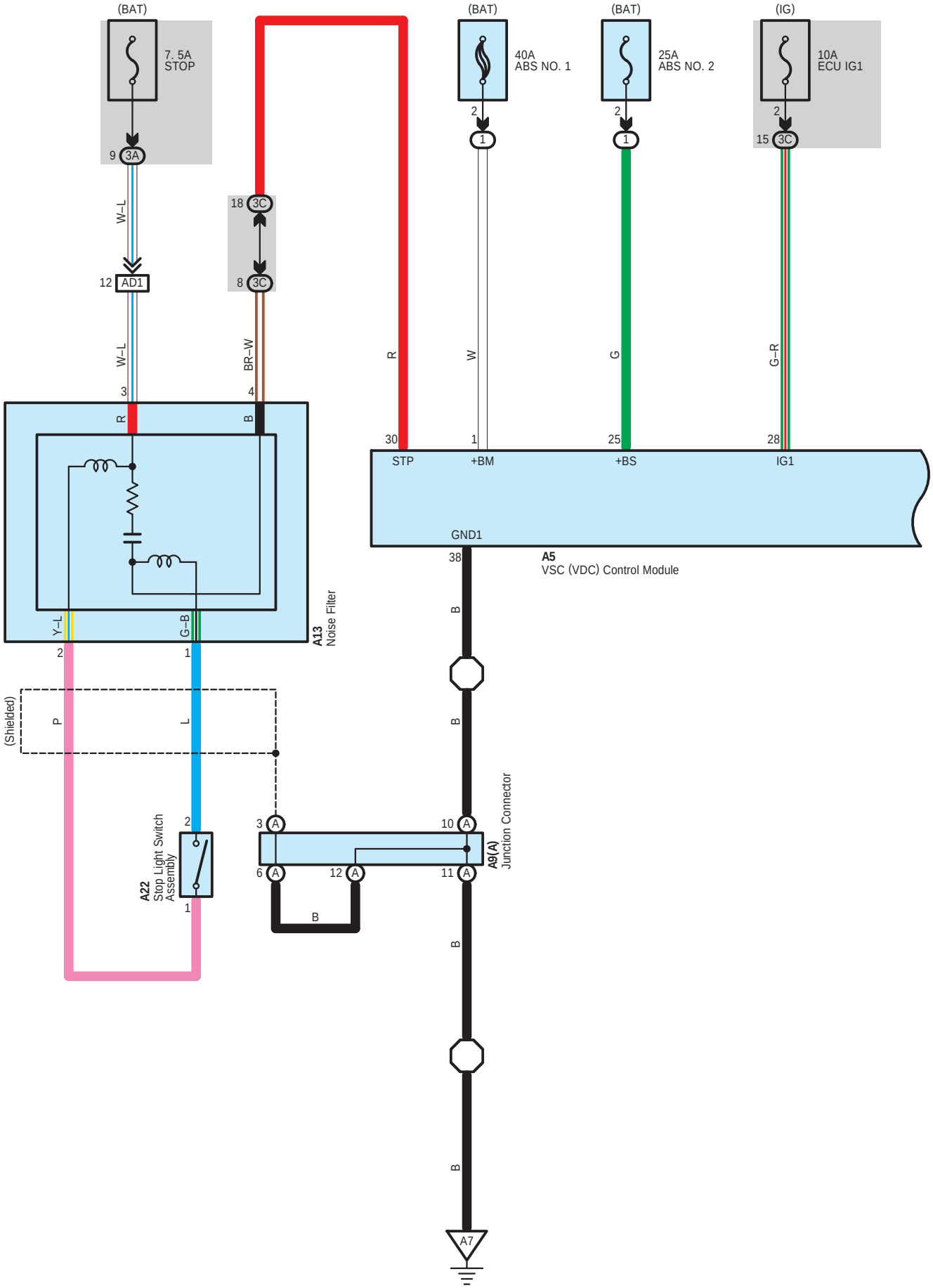
(BAT)
7. 5A
STOP
9
3A
W–L
12
AD1
W–L
3
R
18
3C
8
3C
BR–W
4
B
(BAT)
40A
ABS NO. 1
2
1
R
30
STP
W
1
+BM
(BAT)
25A
ABS NO. 2
2
1
G
25
+BS
(IG)
10A
ECU IG1
2
15
3C
G–R
28
IG1
GND1
38
A5
VSC (VDC) Control Module
B
B
B
B
B
A13
Noise Filter
Y–L
2
G–B
1
(Shielded)
P
L
2
A22
Stop Light Switch
Assembly
1
3
A
6
A
12
A
B
10
A
11
A
A9(A)
Junction Connector
A7

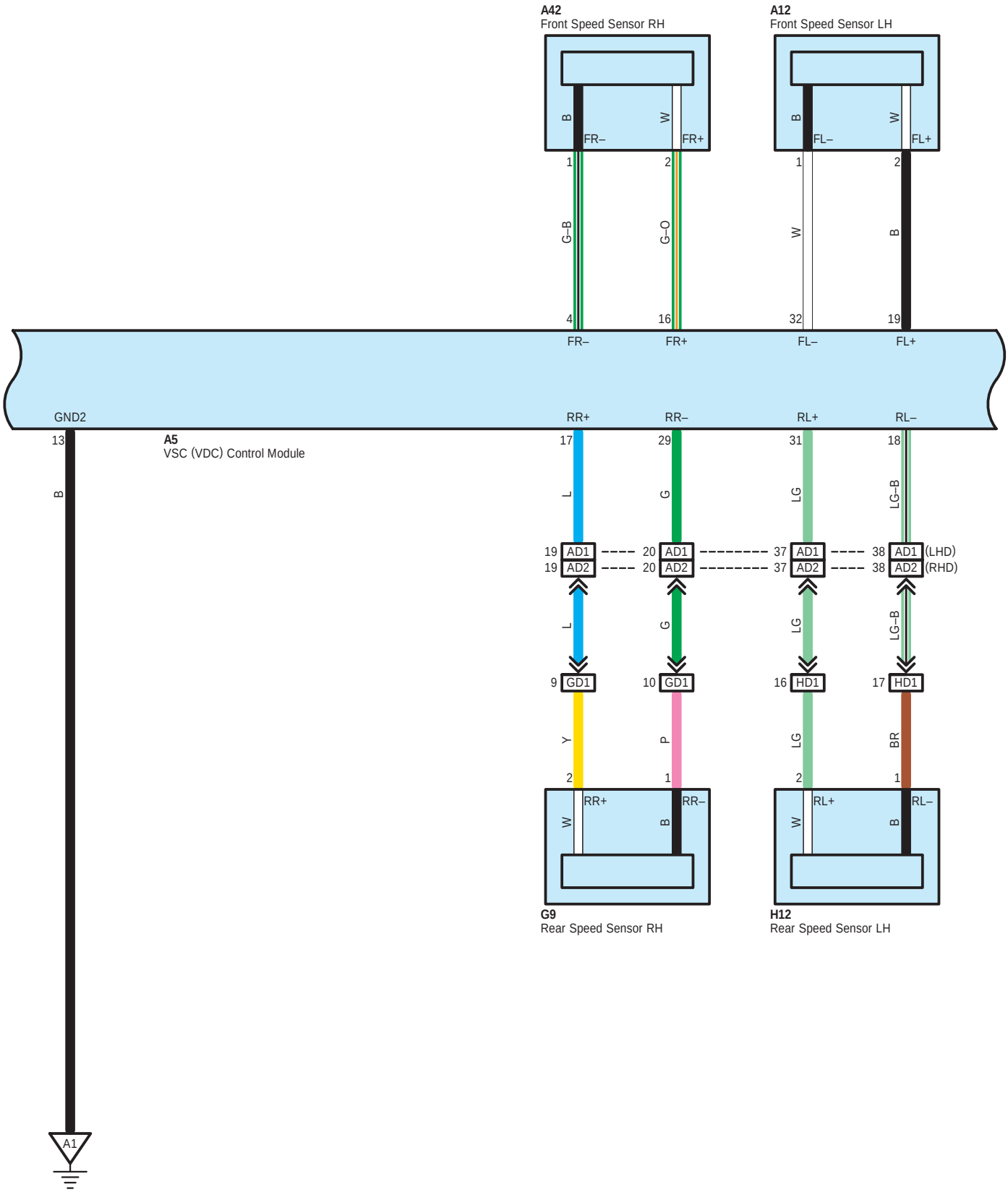
A42
Front Speed Sensor RH
A12
Front Speed Sensor LH
B
W
FR–
FR+
FL–
FL+
1
2
4
16
32
19
G–B
G–O
W
B
GND2
13
A5
VSC (VDC) Control Module
RR+
RR–
RL+
RL–
17
29
31
18
L
G
LG
LG–B
19 AD1
19 AD2
20 AD1
20 AD2
37 AD1
37 AD2
38 AD1 (LHD)
38 AD2 (RHD)
9 GD1
10 GD1
16 HD1
17 HD1
Y
P
BR
G9
Rear Speed Sensor RH
H12
Rear Speed Sensor LH
A1

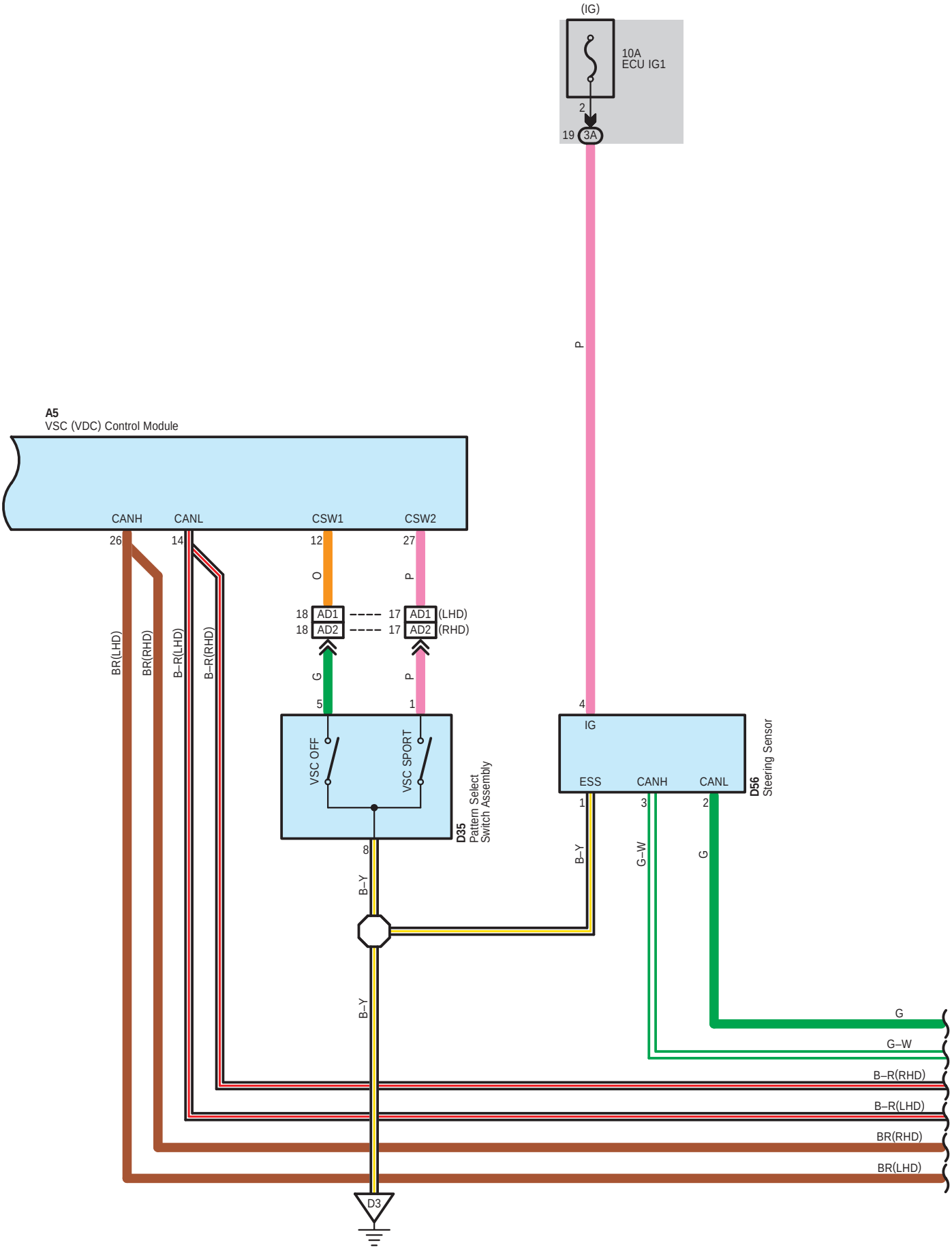
(IG)
10A
ECU IG1
2
19
3A
P
A5
VSC (VDC) Control Module
CANH
CANL
CSW1
CSW2
26
14
12
27
O
P
18
AD1
18
AD2
17
AD1
(LHD)
17
AD2
(RHD)
G
P
5
1
VSC OFF
VSC SPORT
D35
Pattern Select
Switch Assembly
8
B–Y
B–Y
4
IG
ESS
CANH
CANL
D56
Steering Sensor
1
3
2
B–Y
G–W
G
BR(LHD)
BR(RHD)
B–R(LHD)
B–R(RHD)
G
G–W
B–R(RHD)
B–R(LHD)
BR(RHD)
BR(LHD)
D3

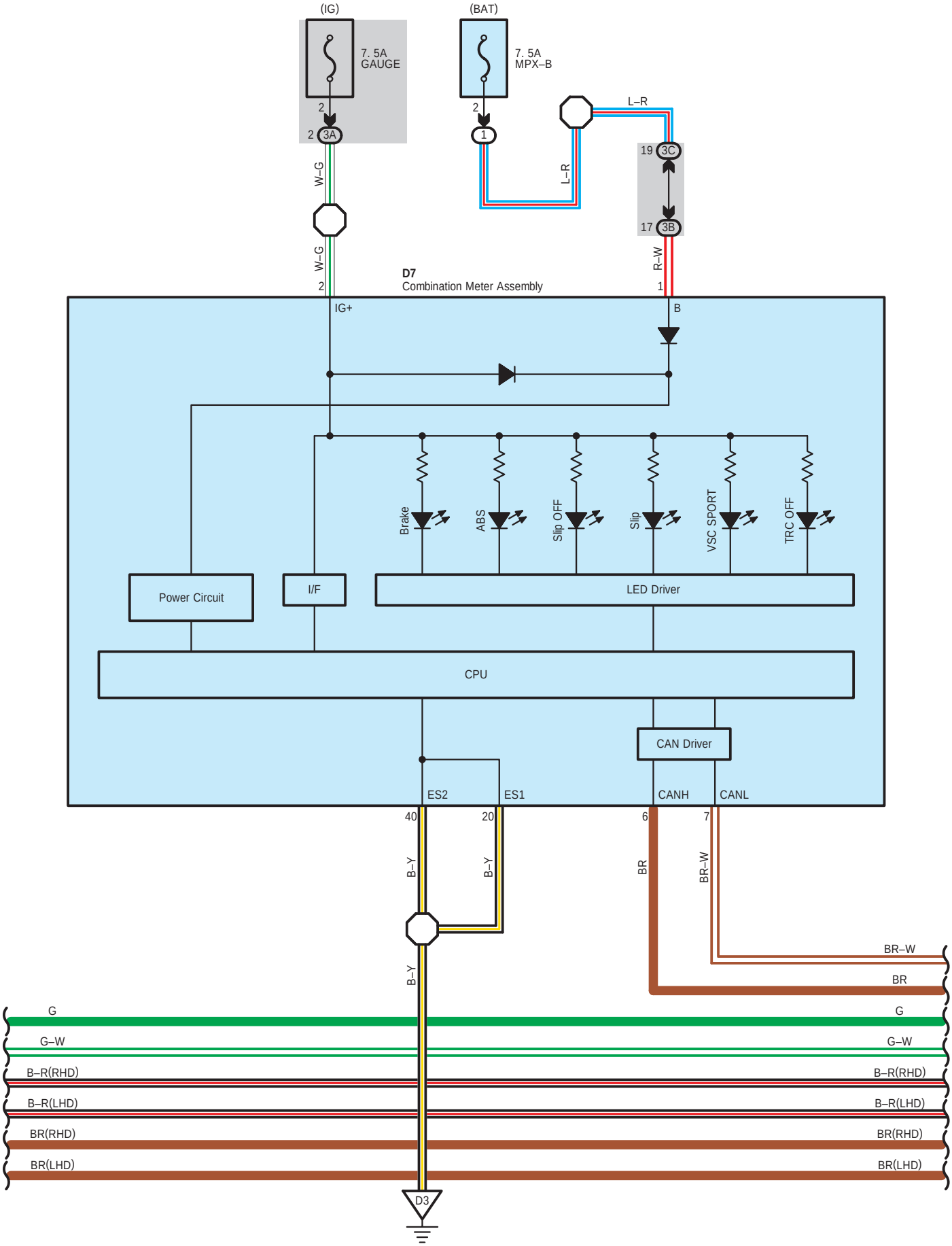
(IG)
7. 5A
GAUGE
2
2 3A
W–G
W–G
2
(BAT)
7. 5A
MPX–B
2
1
L–R
L–R
19 3C
17 3B
R–W
1
D7
Combination Meter Assembly
IG+
B
Brake
ABS
Slip OFF
Slip
VSC SPORT
TRC OFF
Power Circuit
I/F
LED Driver
CPU
CAN Driver
ES2
ES1
CANH
CANL
40
20
6
7
B–Y
B–Y
BR
BR–W
B–Y
BR–W
BR
G
G–W
B–R(RHD)
B–R(LHD)
BR(RHD)
BR(LHD)
G
G–W
B–R(RHD)
B–R(LHD)
BR(RHD)
BR(LHD)
D3

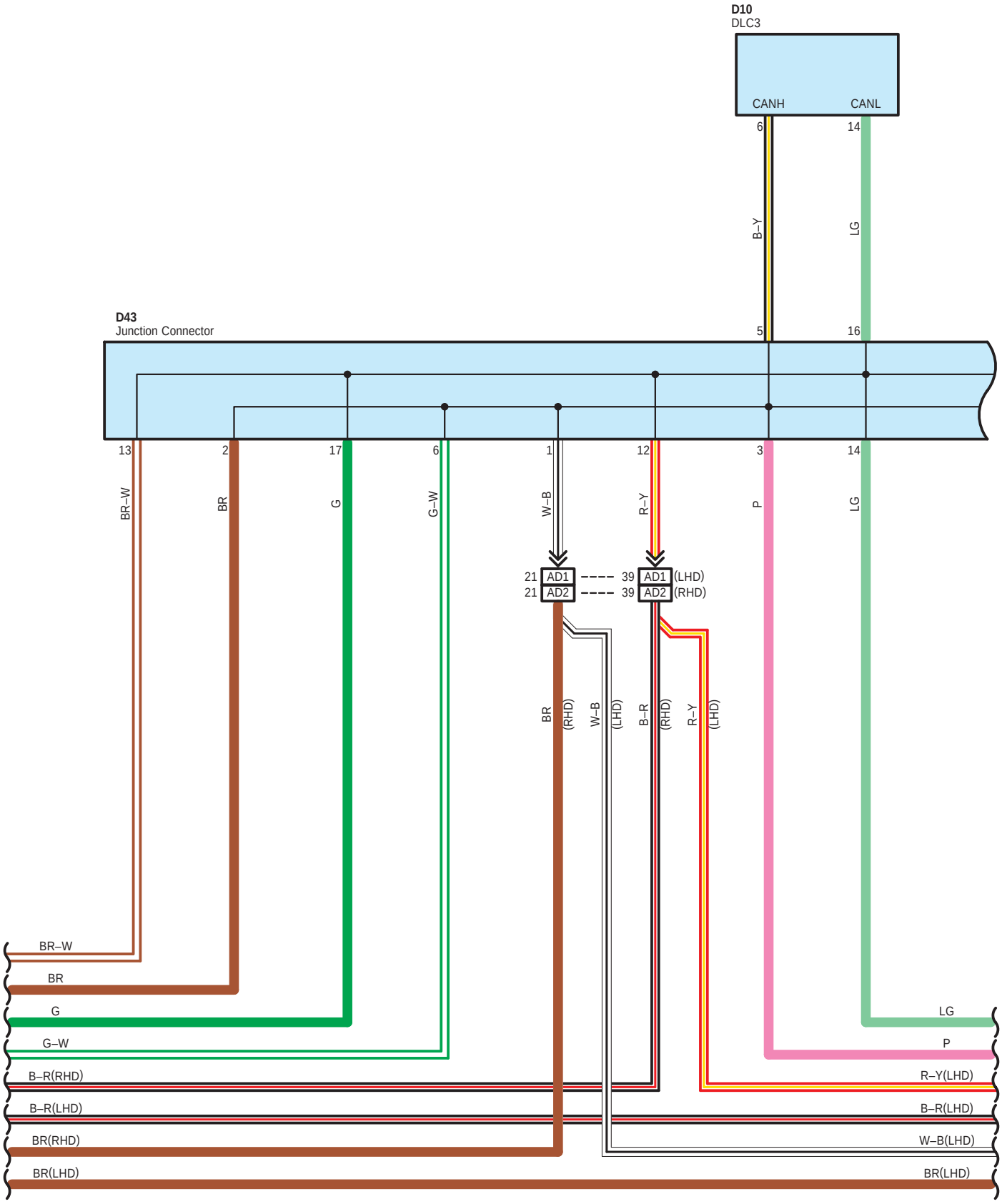
D10
DLC3
CANH
CANL
6
14
B–Y
LG
D43
Junction Connector
5
16
13
2
17
6
1
12
3
14
BR–W
BR
G
G–W
W–B
R–Y
P
LG
21 AD1
21 AD2
39 AD1 (LHD)
39 AD2 (RHD)
BR (RHD)
W–B (LHD)
B–R (RHD)
R–Y (LHD)
BR–W
BR
G
G–W
B–R(RHD)
B–R(LHD)
BR(RHD)
BR(LHD)
LG
P
R–Y(LHD)
B–R(LHD)
W–B(LHD)
BR(LHD)

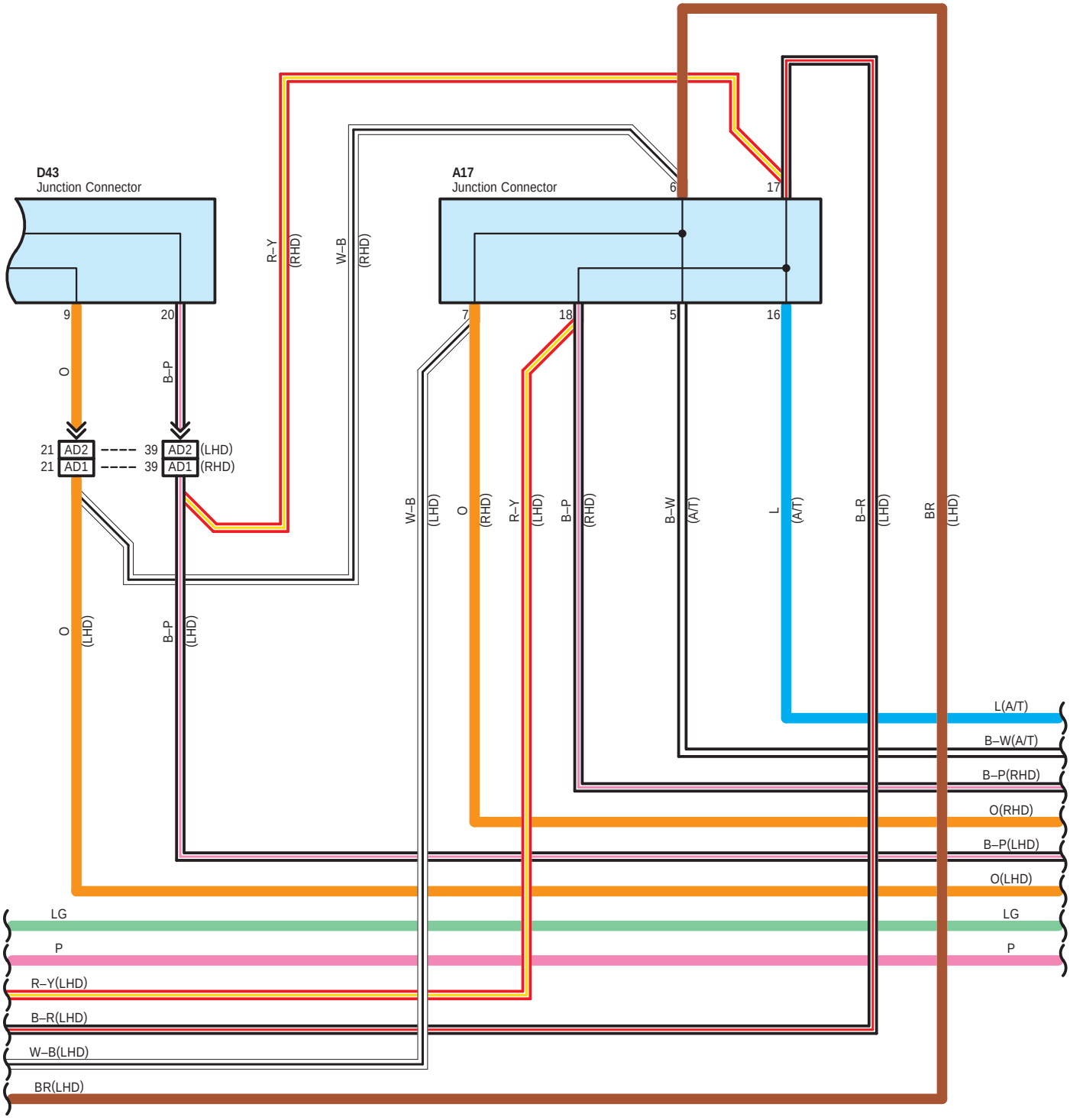
D43
Junction Connector
A17
Junction Connector
9
20
6
17
7
18
5
16
O
B–P
21 AD2
21 AD1
39 AD2 (LHD)
39 AD1 (RHD)
R–Y (RHD)
W–B (RHD)
W–B (LHD)
O (RHD)
R–Y (LHD)
B–P (RHD)
B–W (A/T)
L (A/T)
B–R (LHD)
BR (LHD)
O (LHD)
B–P (LHD)
L(A/T)
B–W(A/T)
B–P(RHD)
O(RHD)
B–P(LHD)
O(LHD)
LG
P
R–Y(LHD)
B–R(LHD)
W–B(LHD)
BR(LHD)

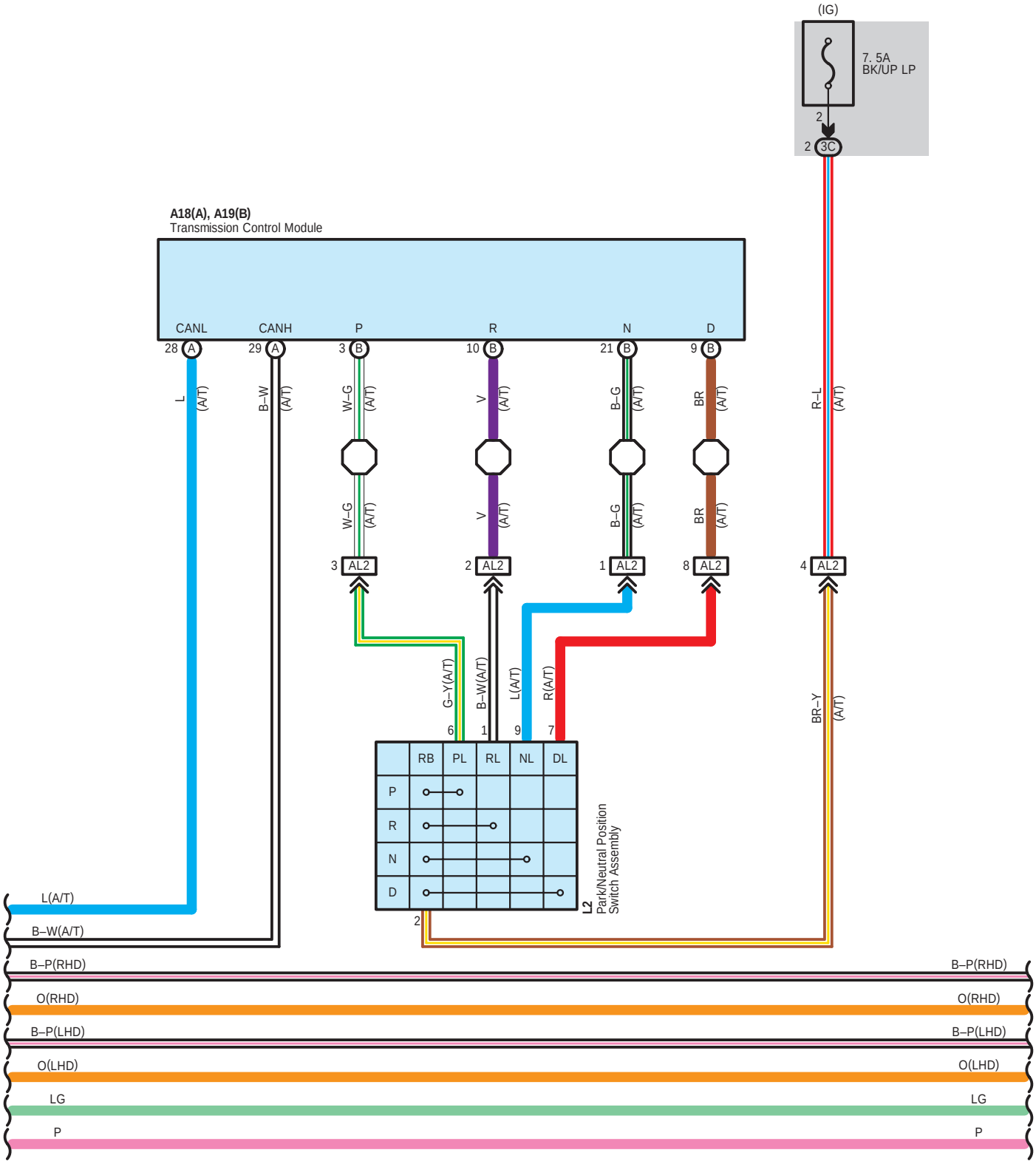
(IG)
7. 5A
BK/UP LP
2
2 3C
A18(A), A19(B)
Transmission Control Module
CANL
CANH
P
R
N
D
28 A
29 A
3 B
10 B
21 B
9 B
L (A/T)
B–W (A/T)
W–G (A/T)
V (A/T)
B–G (A/T)
BR (A/T)
R–L (A/T)
3 AL2
2 AL2
1 AL2
8 AL2
4 AL2
G–Y(A/T)
B–W(A/T)
L(A/T)
R(A/T)
BR–Y (A/T)
6
1
9
7
RB
PL
RL
NL
DL
P
R
N
D
2
L2
Park/Neutral Position
Switch Assembly
L(A/T)
B–W(A/T)
B–P(RHD)
O(RHD)
B–P(LHD)
O(LHD)
LG
P

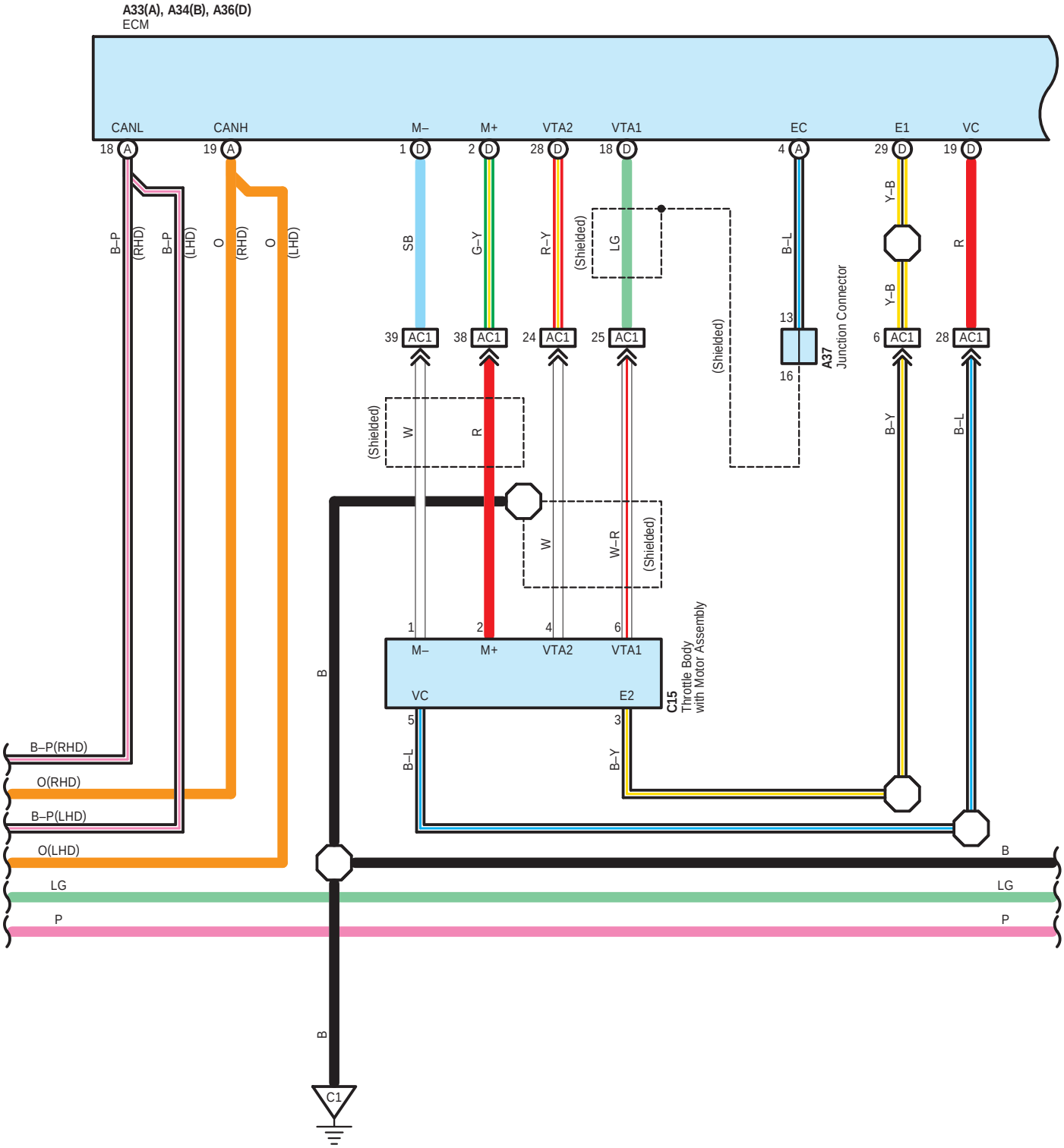
A33(A), A34(B), A36(D)
ECM
CANL
CANH
M–
M+
VTA2
VTA1
EC
E1
VC
18 A
19 A
1 D
2 D
28 D
18 D
4 A
29 D
19 D
B–P
(RHD)
B–P
(LHD)
O
(RHD)
O
(LHD)
SB
G–Y
R–Y
(Shielded)
LG
B–L
Y–B
R
39 AC1
38 AC1
24 AC1
25 AC1
13
16
A37
Junction Connector
6 AC1
28 AC1
(Shielded)
W
R
W
W–R
(Shielded)
B–Y
B–L
1
2
4
6
M–
M+
VTA2
VTA1
VC
E2
C15
Throttle Body
with Motor Assembly
5
3
B–L
B–Y
B
B–P(RHD)
O(RHD)
B–P(LHD)
O(LHD)
LG
P
C1

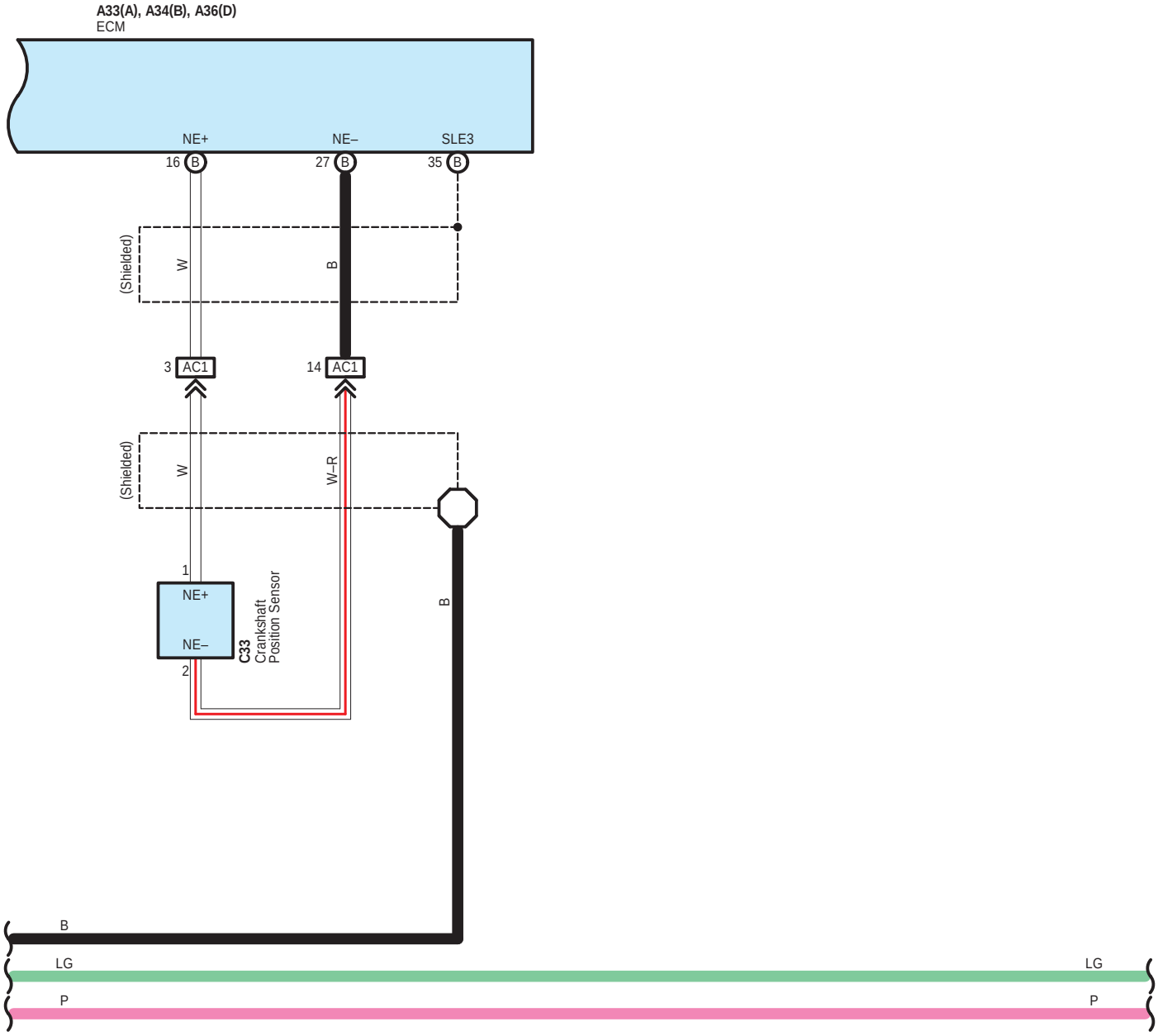
A33(A), A34(B), A36(D)
ECM
NE+
NE–
SLE3
16 B
27 B
35 B
(Shielded)
W
B
3 AC1
14 AC1
(Shielded)
W
W–R
1
NE+
NE–
2
C33
Crankshaft
Position Sensor
B
B
LG
LG
P
P

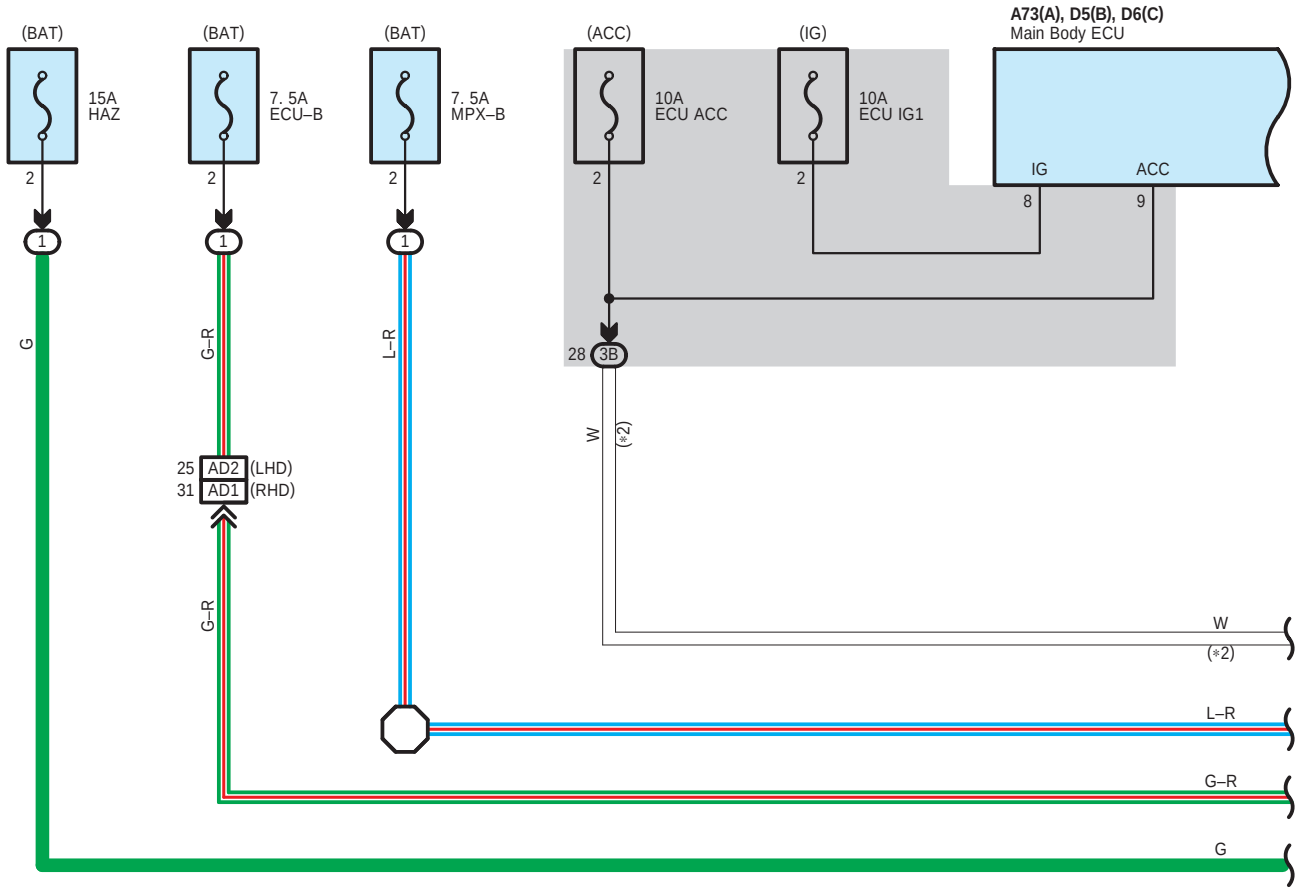

* 2 : w/ Entry & Start System

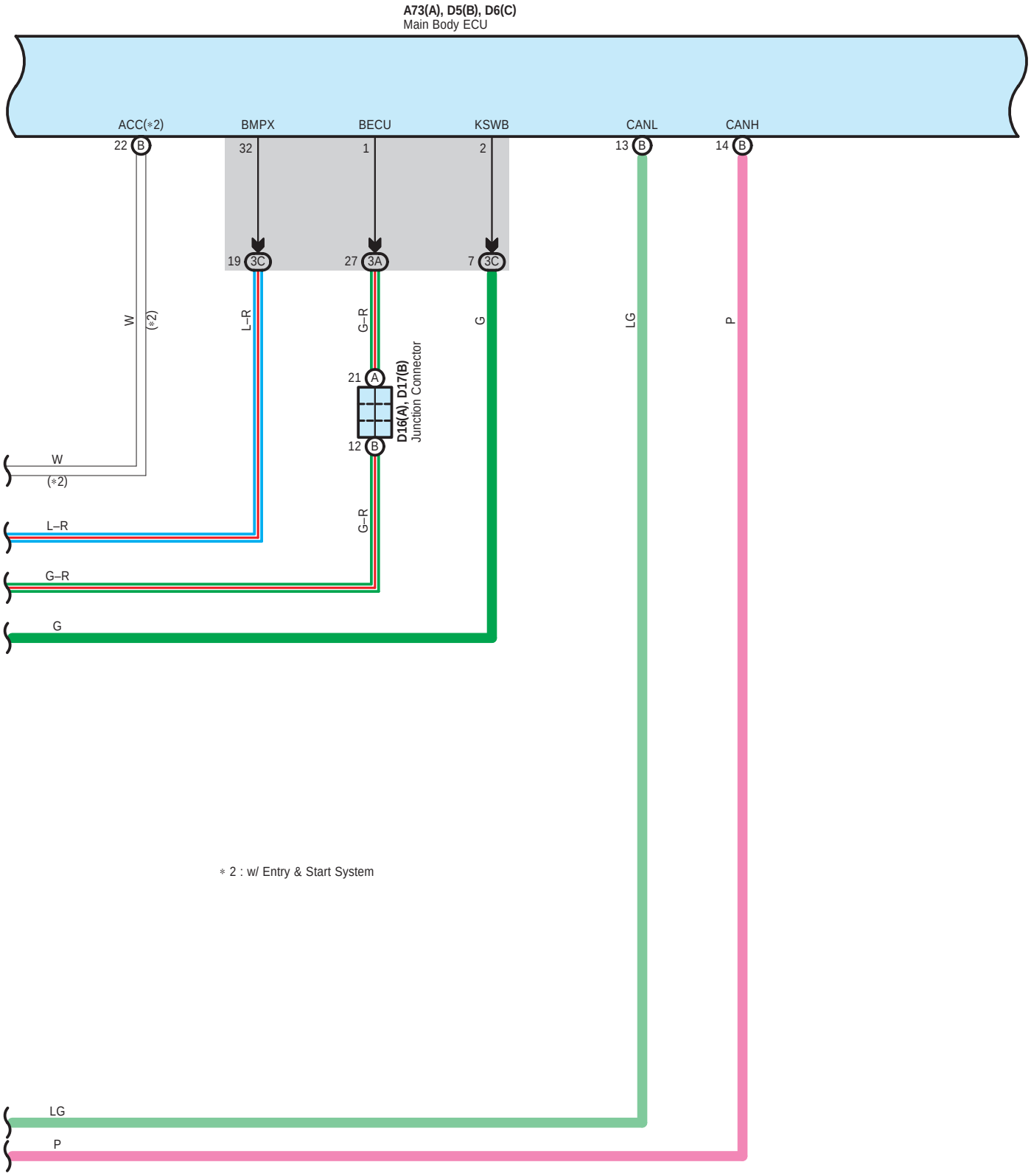
A73(A), D5(B), D6(C)
Main Body ECU
ACC(*2)
BMPX
BECU
KSWB
CANL
CANH
22 B
32
1
2
13 B
14 B
19 3C
27 3A
7 3C
W
(*2)
L–R
G–R
G
LG
P
21 A
12 B
D16(A), D17(B)
Junction Connector
W
(*2)
L–R
G–R
G
LG
P
* 2 : w/ Entry & Start System

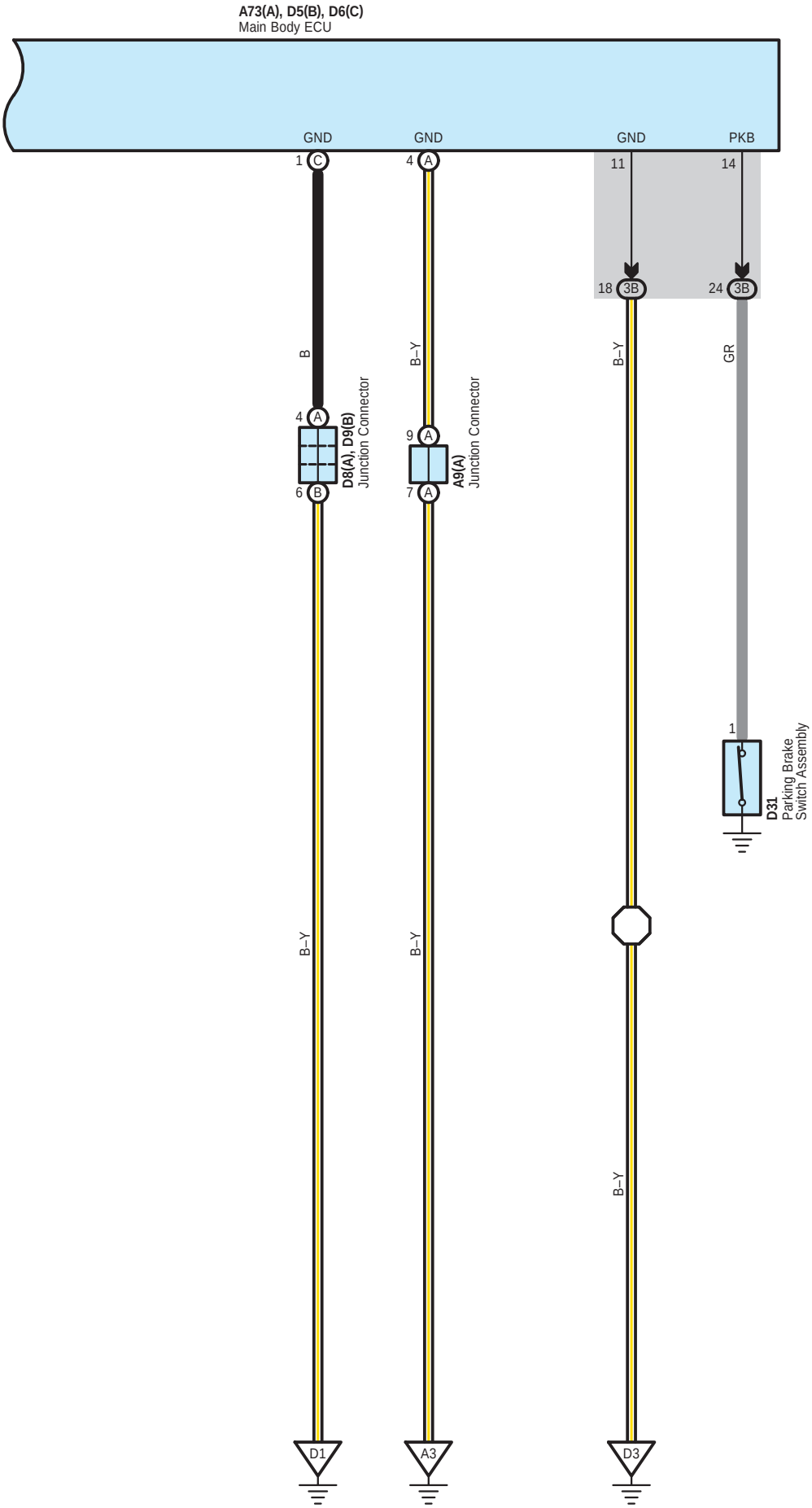
A73(A), D5(B), D6(C)
Main Body ECU
GND
GND
GND
PKB
1 C
4 A
11
14
18 3B
24 3B
B
B–Y
B–Y
GR
4 A
6 B
D8(A), D9(B)
Junction Connector
9 A
7 A
A9(A)
Junction Connector
1
D31
Parking Brake
Switch Assembly
B–Y
B–Y
B–Y
D1
A3
D3

○ : **Parts Location**

Code		See Page	Code		See Page	Code		See Page
A5		39 (LHD)	A36	D	50 (RHD)	D10		40 (LHD)
		47 (RHD)	A37		42 (LHD)			48 (RHD)
A9	A	42 (LHD)			50 (RHD)	D16	A	40 (LHD)
		50 (RHD)	A42		39 (LHD)			48 (RHD)
A12		39 (LHD)			47 (RHD)	D17	B	40 (LHD)
		47 (RHD)	A73	A	42 (LHD)			48 (RHD)
A13		42 (LHD)			50 (RHD)	D31		40 (LHD)
		50 (RHD)	C15		38 (LHD)			48 (RHD)
A17		42 (LHD)			46 (RHD)	D35		40 (LHD)
		50 (RHD)	C33		38 (LHD)			48 (RHD)
A18	A	42 (LHD)			46 (RHD)	D43		41 (LHD)
		50 (RHD)	D5	B	40 (LHD)			49 (RHD)
A19	B	42 (LHD)			48 (RHD)	D56		41 (LHD)
		50 (RHD)	D6	C	40 (LHD)			49 (RHD)
A22		42 (LHD)			48 (RHD)	G9		44 (LHD)
		50 (RHD)	D7		40 (LHD)			52 (RHD)
A33	A	42 (LHD)			48 (RHD)	H12		45 (LHD)
		50 (RHD)	D8	A	40 (LHD)			53 (RHD)
A34	B	42 (LHD)			48 (RHD)	L2		39 (LHD)
		50 (RHD)	D9	B	40 (LHD)			47 (RHD)
A36	D	42 (LHD)			48 (RHD)			

Relay Blocks

Code	See Page	Relay Blocks (Relay Block Location)
1	24	Engine Room R/B (Engine Compartment Right)

Junction Block and Wire Harness Connector

Code	See Page	Junction Block and Wire Harness (Connector Location)
3A	26	Instrument Panel Wire and Instrument Panel J/B Assembly (Instrument Panel Reinforcement)
3B		
3C	26	Engine Room Main Wire and Instrument Panel J/B Assembly (Instrument Panel Reinforcement)

Connector Joining Wire Harness and Wire Harness

Code	See Page	Joining Wire Harness and Wire Harness (Connector Location)
AC1	54 (LHD)	Engine Room Main Wire and Engine Wire (Engine Unit)
	58 (RHD)	
AD1	55 (LHD)	Engine Room Main Wire and Instrument Panel Wire (Cowl Side Panel RH)
	59 (RHD)	
AD2	55 (LHD)	Engine Room Main Wire and Instrument Panel Wire (Instrument Panel Reinforcement)
	59 (RHD)	
AL2	54 (LHD)	Engine Room Main Wire and Transmission Wire (Dash Panel)
	58 (RHD)	
GD1	55 (LHD)	No. 1 Floor Wire and Instrument Panel Wire (Cowl Side Panel RH)
	59 (RHD)	
HD1	55 (LHD)	No. 2 Floor Wire and Instrument Panel Wire (Cowl Side Panel LH)
	59 (RHD)	

Ground Points

Code	See Page	Ground Points Location
A1	54 (LHD)	Front Fender Apron LH
	58 (RHD)	
A3	55 (LHD)	Cowl Side Panel RH
	59 (RHD)	Cowl Side Panel LH
A7	54 (LHD)	Front Fender Apron RH
	58 (RHD)	
C1	54 (LHD)	Engine Unit

▽ : **Ground Points**

Code	See Page	Ground Points Location
C1	58 (RHD)	Engine Unit
D1	55 (LHD)	Cowl Side Panel LH
	59 (RHD)	Cowl Side Panel RH
D3	55 (LHD)	Instrument Panel Brace RH
	59 (RHD)	Instrument Panel Brace LH

NOTICE : When inspecting or repairing the SRS, perform service in accordance with the following precautionary instructions and the procedure, and precautions in the Repair Manual applicable for the model year.

- Malfunction symptoms of the SRS are difficult to confirm, so the DTCs become the most important source of information when troubleshooting. When troubleshooting the SRS, always inspect the DTCs before disconnecting the battery.
- **Work must be started more than 90 seconds after the ignition or starter switch assembly is turned to the ”LOCK” position (Ignition switch type) or the engine switch is pushed to the ”OFF” position (Engine switch type) and the negative (-) terminal cable is disconnected from the battery.**
  (The SRS is equipped with a back-up power source so that if work is started within 90 seconds from disconnecting the negative (-) terminal cable of the battery, the SRS may deploy.)
- When the negative (-) terminal cable is disconnected from the battery, the memory of the clock and audio system will be cleared. So before starting work, make a record of the contents in the audio memory system. When work is finished, reset the audio systems as they were before and adjust the clock. Some vehicles have power tilt steering, power telescopic steering, power seat and power outside rear view mirror which are all equipped with memory function. However, it is not possible to make a record of these memory contents. So when the work is finished, it will be necessary to explain it to your customer, and ask the customer to adjust the features and reset the memory. To avoid erasing the memory in each system, never use a back-up power supply from outside the vehicle.
- Before repair, remove the airbag sensor if shocks are likely to be applied to the sensor during repair.
- Do not expose the following parts directly to hot air or flame;
- Even in cases of a minor collision where the SRS does not deploy, the following parts should be inspected;
- Never use SRS parts from another vehicle. When replacing parts, replace with new parts.
- For the purpose of reuse, never disassemble and repair the following parts.
- If the following parts have been dropped, or have cracks, dents and other defects in their case, bracket, and connector, replace with new one.
- Use a volt/ohmmeter with high impedance (10 kΩ/V minimum) for troubleshooting electrical circuits of the system.
- Information labels are attached to the periphery of the SRS components. Follow the instructions of the notice.
- After work on the SRS is completed, check the SRS warning light.
- If the vehicle is equipped with a mobile communication system, refer to the precaution in the IN section of the Repair Manual.

* Driver’s Airbag Module
* Passenger’s Airbag Module
* Side Airbag Module
* Curtain Airbag Module
* Pretensioner
* Airbag Control Module
* Front Sub Sensor
* Side Airbag Sensor
* Curtain Airbag Sensor
* Front Door Impact Sensor
* Driver’s Knee Airbag Module
* Satellite Safing Sensor

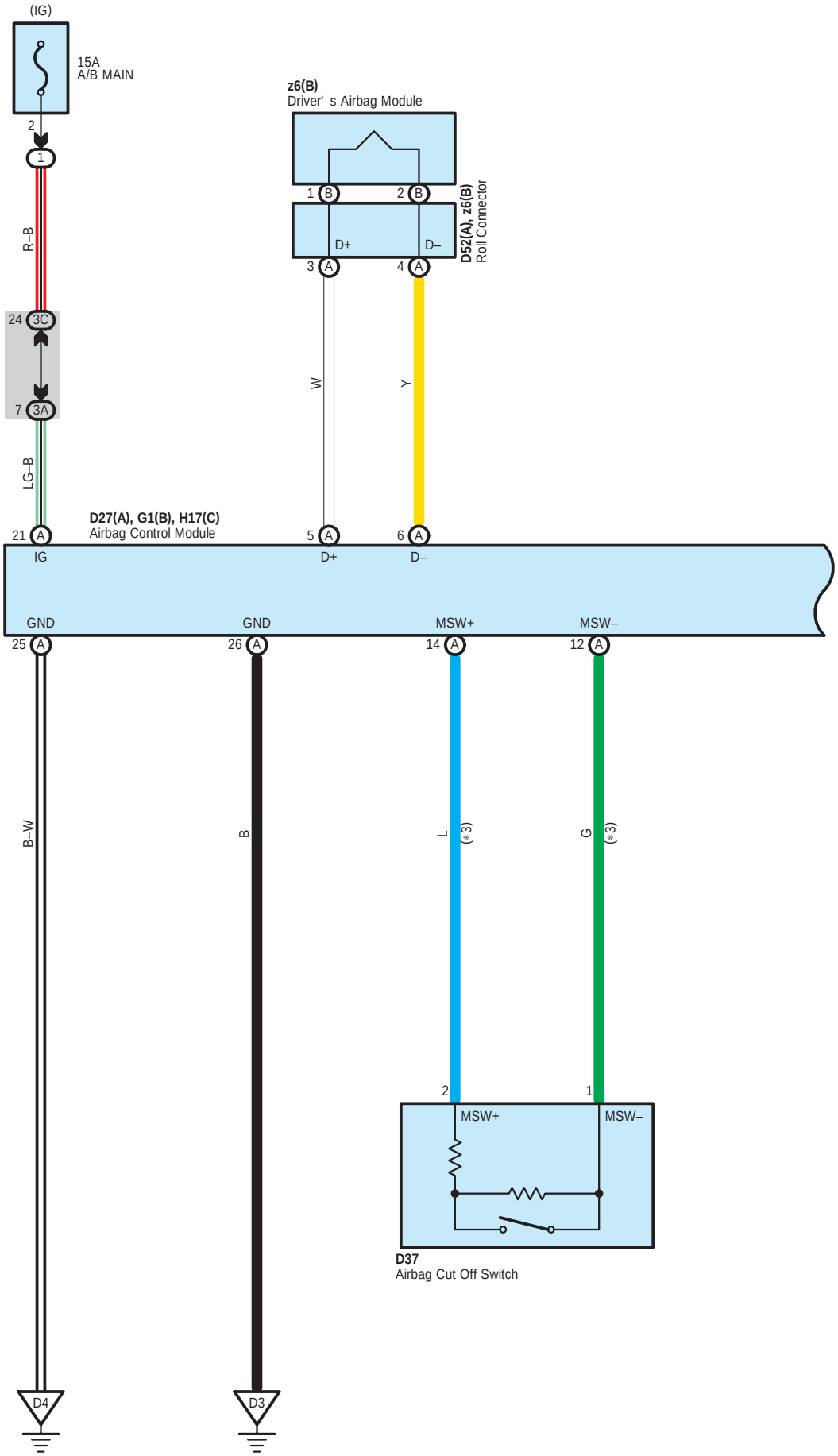
(IG)
15A
A/B MAIN
2
1
R–B
24 3C
7 3A
LG–B
21 A
IG
D27(A), G1(B), H17(C)
Airbag Control Module
z6(B)
Driver' s Airbag Module
1 B
2 B
D+
D–
3 A
4 A
D52(A), z6(B)
Roll Connector
W
Y
5 A
6 A
D+
D–
GND
25 A
GND
26 A
MSW+
14 A
MSW–
12 A
B–W
B
L
(*3)
G
(*3)
2
1
MSW+
MSW–
D37
Airbag Cut Off Switch
D4
D3

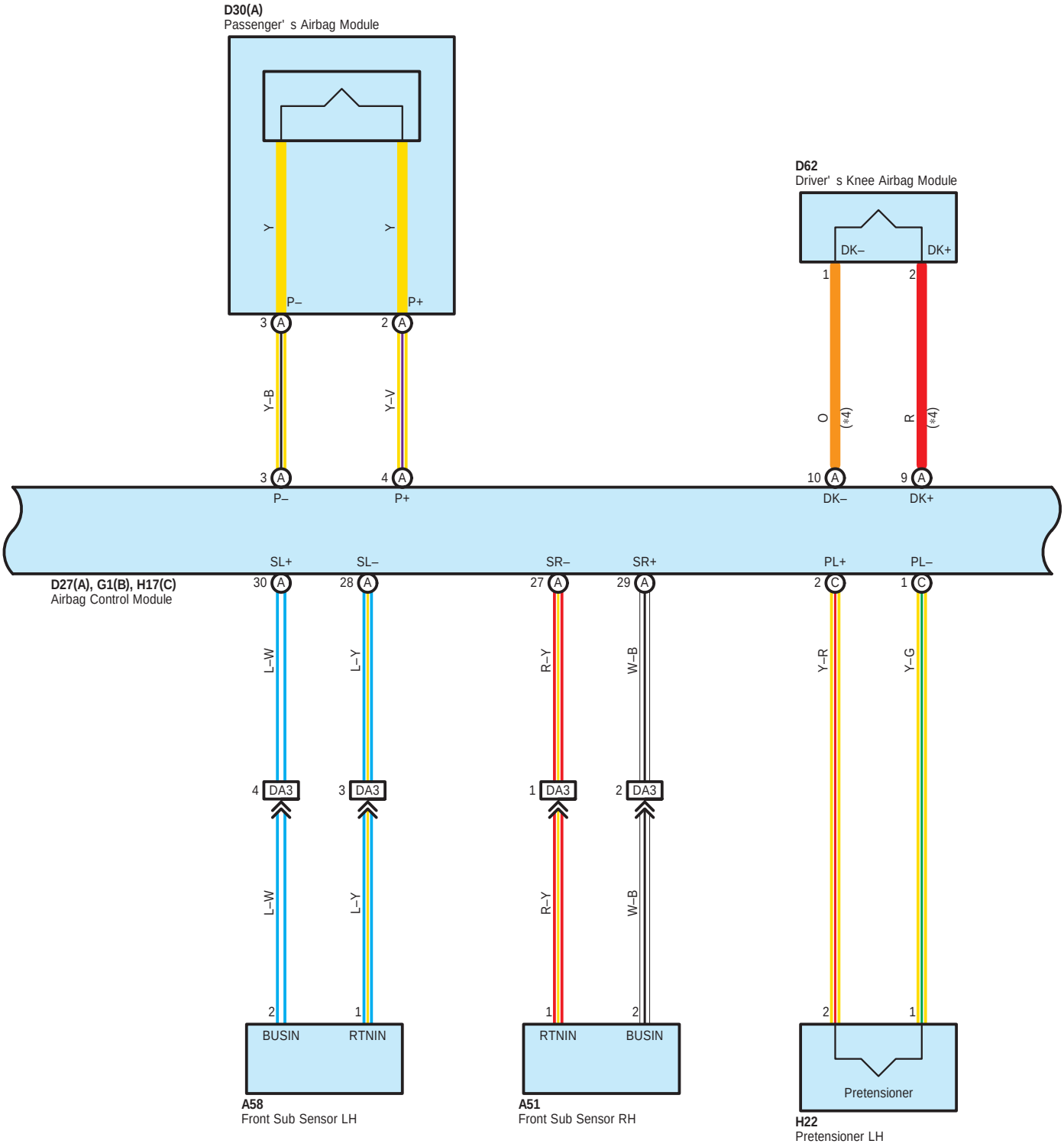

∗ 3 : w/ Airbag Cut Off Switch
∗ 4 : w/ Driver' s Knee Airbag Module

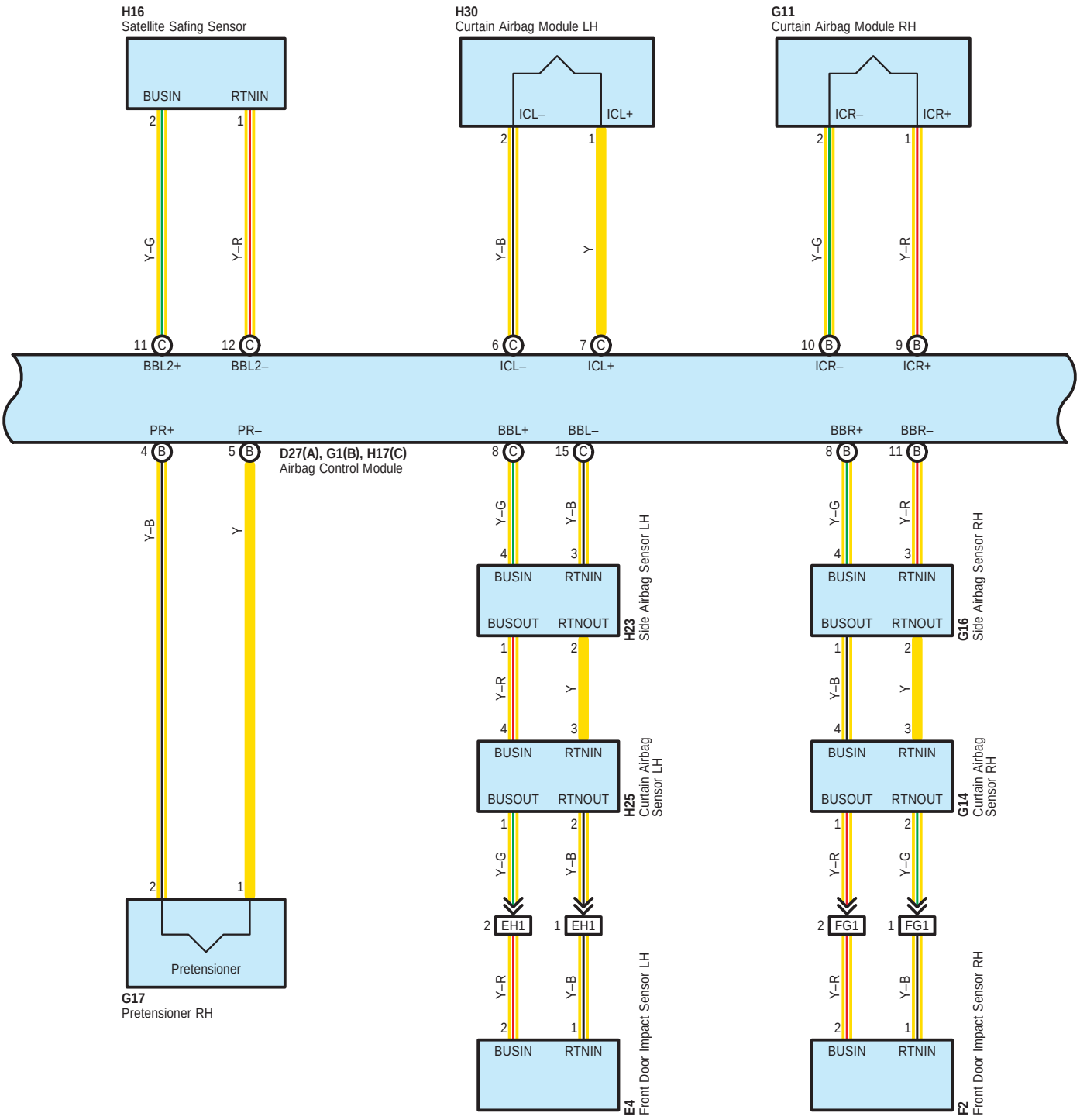
H16
Satellite Safing Sensor
BUSIN
RTNIN
H30
Curtain Airbag Module LH
ICL–
ICL+
G11
Curtain Airbag Module RH
ICR–
ICR+
Y–G
Y–R
Y–B
Y
BBL2+
BBL2–
ICL–
ICL+
ICR–
ICR+
PR+
PR–
BBL+
BBL–
BBR+
BBR–
D27(A), G1(B), H17(C)
Airbag Control Module
BUSOUT
RTNOUT
H23
Side Airbag Sensor LH
G16
Side Airbag Sensor RH
H25
Curtain Airbag Sensor LH
G14
Curtain Airbag Sensor RH
EH1
FG1
Pretensioner
G17
Pretensioner RH
E4
Front Door Impact Sensor LH
F2
Front Door Impact Sensor RH

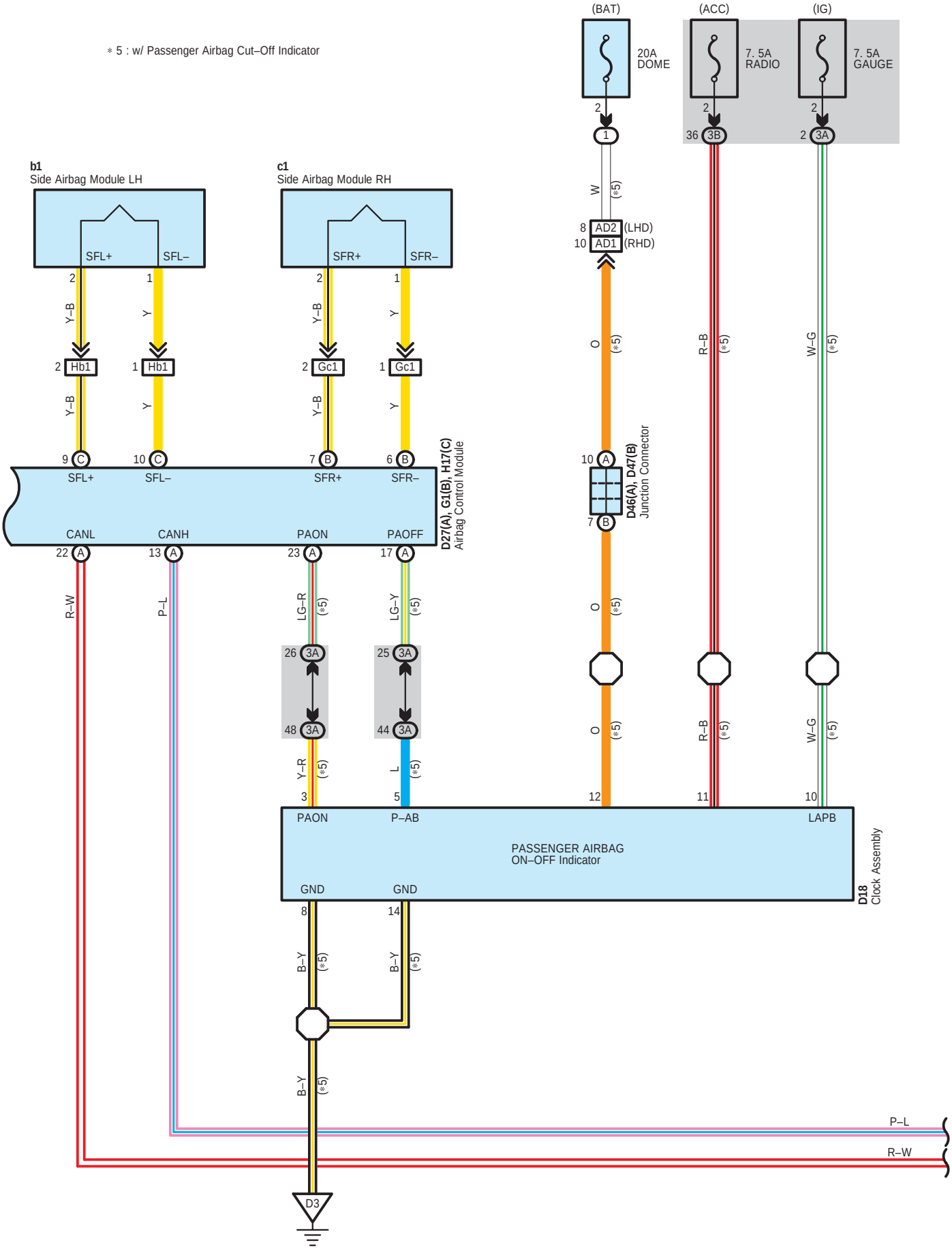
∗ 5 : w/ Passenger Airbag Cut–Off Indicator
(BAT)
(ACC)
(IG)
20A DOME
7. 5A RADIO
7. 5A GAUGE
b1
Side Airbag Module LH
c1
Side Airbag Module RH
SFL+
SFL–
SFR+
SFR–
Hb1
Gc1
AD2 (LHD)
AD1 (RHD)
D27(A), G1(B), H17(C)
Airbag Control Module
D46(A), D47(B)
Junction Connector
CANL
CANH
PAON
PAOFF
PASSENGER AIRBAG
ON–OFF Indicator
PAON
P–AB
LAPB
GND
GND
D18
Clock Assembly
D3
P–L
R–W

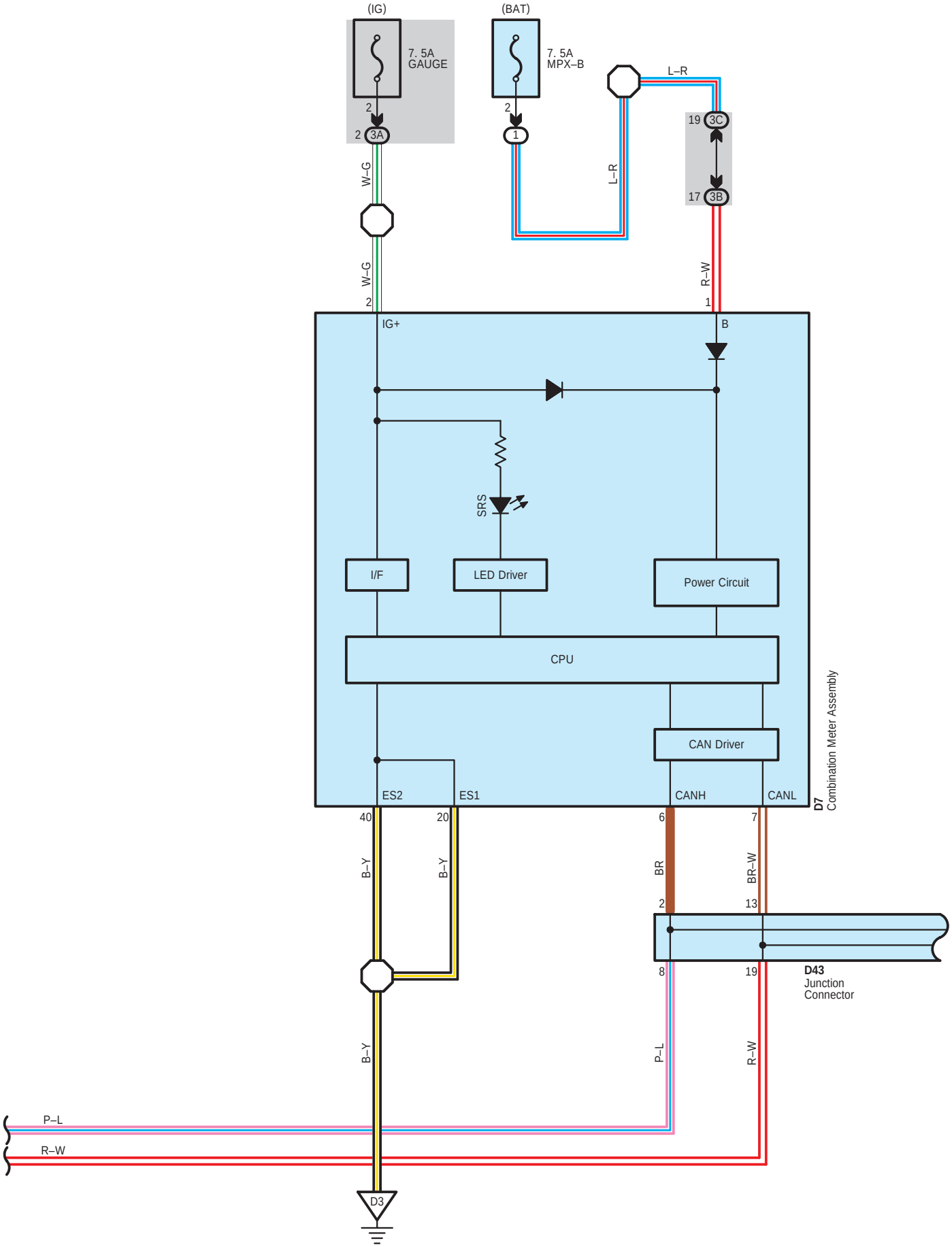
(IG)
7. 5A
GAUGE
(BAT)
7. 5A
MPX–B
L–R
2
2 3A
2
1
19 3C
17 3B
W–G
W–G
L–R
R–W
2
1
IG+
B
SRS
I/F
LED Driver
Power Circuit
CPU
CAN Driver
ES2
ES1
CANH
CANL
D7
Combination Meter Assembly
40
20
6
7
B–Y
B–Y
BR
BR–W
2
13
8
19
D43
Junction
Connector
B–Y
P–L
R–W
P–L
R–W
D3

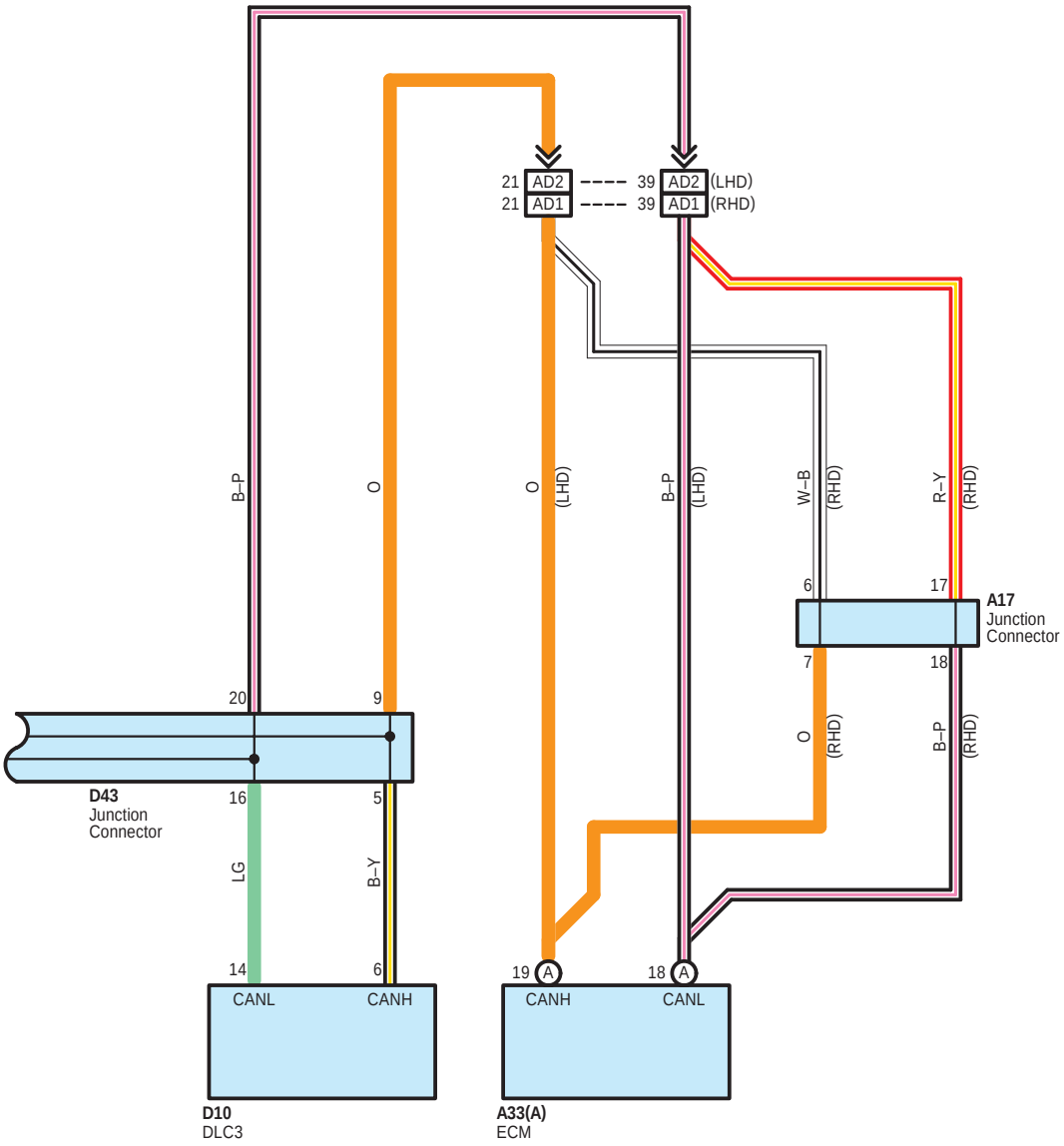
21 AD2
21 AD1
39 AD2 (LHD)
39 AD1 (RHD)
B–P
O
O (LHD)
B–P (LHD)
W–B (RHD)
R–Y (RHD)
6
17
A17
Junction
Connector
7
18
O (RHD)
B–P (RHD)
20
9
D43
Junction
Connector
16
5
LG
B–Y
14
6
CANL
CANH
D10
DLC3
19 A
18 A
CANH
CANL
A33(A)
ECM

○ : Parts Location

Code		See Page
A17		50 (RHD)
A33	A	42 (LHD)
		50 (RHD)
A51		39 (LHD)
		47 (RHD)
A58		39 (LHD)
		47 (RHD)
D7		40 (LHD)
		48 (RHD)
D10		40 (LHD)
		48 (RHD)
D18		40 (LHD)
		48 (RHD)
D27	A	40 (LHD)
		48 (RHD)
D30	A	40 (LHD)
		48 (RHD)
D37		40 (LHD)
		48 (RHD)
D43		41 (LHD)
		49 (RHD)

Code		See Page
D46	A	41 (LHD)
		49 (RHD)
D47	B	41 (LHD)
		49 (RHD)
D52	A	41 (LHD)
		49 (RHD)
D62		41 (LHD)
		49 (RHD)
E4		44 (LHD)
		52 (RHD)
F2		44 (LHD)
		52 (RHD)
G1	B	42 (LHD)
		50 (RHD)
G11		44 (LHD)
		52 (RHD)
G14		44 (LHD)
		52 (RHD)
G16		44 (LHD)
		52 (RHD)
G17		44 (LHD)

Code		See Page
G17		52 (RHD)
H16		45 (LHD)
		53 (RHD)
H17	C	42 (LHD)
		50 (RHD)
H22		45 (LHD)
		53 (RHD)
H23		45 (LHD)
		53 (RHD)
H25		45 (LHD)
		53 (RHD)
H30		45 (LHD)
		53 (RHD)
b1		45 (LHD)
		53 (RHD)
c1		45 (LHD)
		53 (RHD)
z6	B	42 (LHD)
		50 (RHD)

: Relay Blocks

Code	See Page	Relay Blocks (Relay Block Location)
1	24	Engine Room R/B (Engine Compartment Right)

: Junction Block and Wire Harness Connector

Code	See Page	Junction Block and Wire Harness (Connector Location)
3A	26	Instrument Panel Wire and Instrument Panel J/B Assembly (Instrument Panel Reinforcement)
3B		
3C	26	Engine Room Main Wire and Instrument Panel J/B Assembly (Instrument Panel Reinforcement)

: Connector Joining Wire Harness and Wire Harness

Code	See Page	Joining Wire Harness and Wire Harness (Connector Location)
AD1	59 (RHD)	Engine Room Main Wire and Instrument Panel Wire (Cowl Side Panel RH)
AD2	55 (LHD)	Engine Room Main Wire and Instrument Panel Wire (Instrument Panel Reinforcement)
DA3	55 (LHD)	Instrument Panel Wire and Engine Room Main Wire (Behind Glove Box)
	59 (RHD)	
EH1	55 (LHD)	Front Door Wire LH and No. 2 Floor Wire (Cowl Side Panel LH)
	59 (RHD)	
FG1	55 (LHD)	Front Door Wire RH and No. 1 Floor Wire (Cowl Side Panel RH)
	59 (RHD)	
Gc1	56 (LHD)	No. 1 Floor Wire and Seat Wire RH (Under Front Seat Cushion RH)
	60 (RHD)	
Hb1	56 (LHD)	No. 2 Floor Wire and Seat Wire LH (Under Front Seat Cushion LH)
	60 (RHD)	

▽ : Ground Points

Code	See Page	Ground Points Location
D3	55 (LHD)	Instrument Panel Brace RH
	59 (RHD)	Instrument Panel Brace LH
D4	55 (LHD)	Cowl Side Panel RH
	59 (RHD)	Cowl Side Panel LH

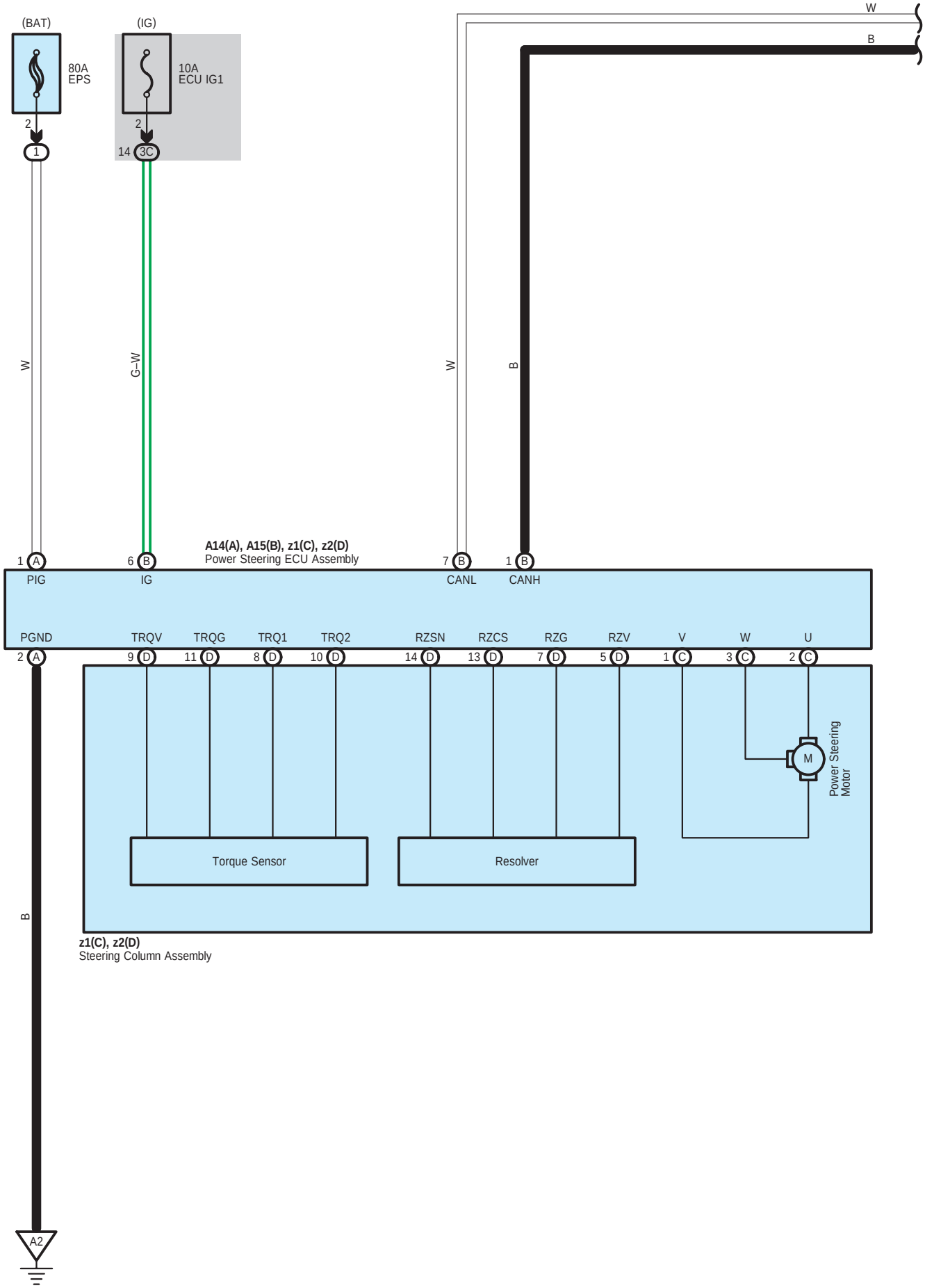
(BAT)
(IG)
80A
EPS
10A
ECU IG1
2
1
2
14 3C
W
G–W
W
B
W
B
A14(A), A15(B), z1(C), z2(D)
Power Steering ECU Assembly
1 A
PIG
6 B
IG
7 B
CANL
1 B
CANH
PGND
TRQV
TRQG
TRQ1
TRQ2
RZSN
RZCS
RZG
RZV
V
W
U
2 A
9 D
11 D
8 D
10 D
14 D
13 D
7 D
5 D
1 C
3 C
2 C
M
Power Steering
Motor
Torque Sensor
Resolver
B
z1(C), z2(D)
Steering Column Assembly
A2

W
W
B
B

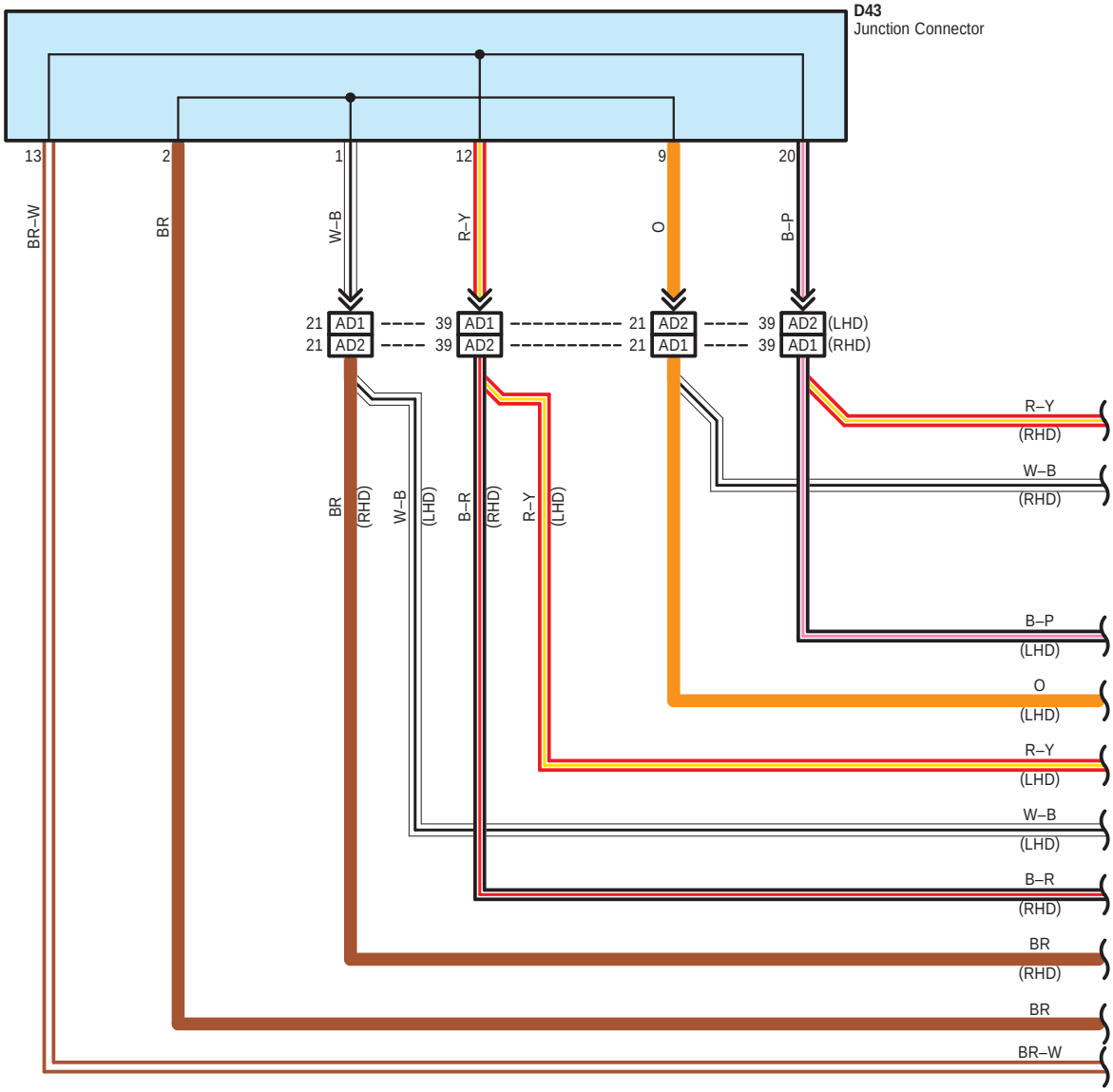
D43
Junction Connector
13
2
1
12
9
20
BR–W
BR
W–B
R–Y
O
B–P
21 AD1
21 AD2
39 AD1
39 AD2
21 AD2
21 AD1
39 AD2 (LHD)
39 AD1 (RHD)
BR (RHD)
W–B (LHD)
B–R (RHD)
R–Y (LHD)
R–Y (RHD)
W–B (RHD)
B–P (LHD)
O (LHD)
R–Y (LHD)
W–B (LHD)
B–R (RHD)
BR (RHD)
BR
BR–W

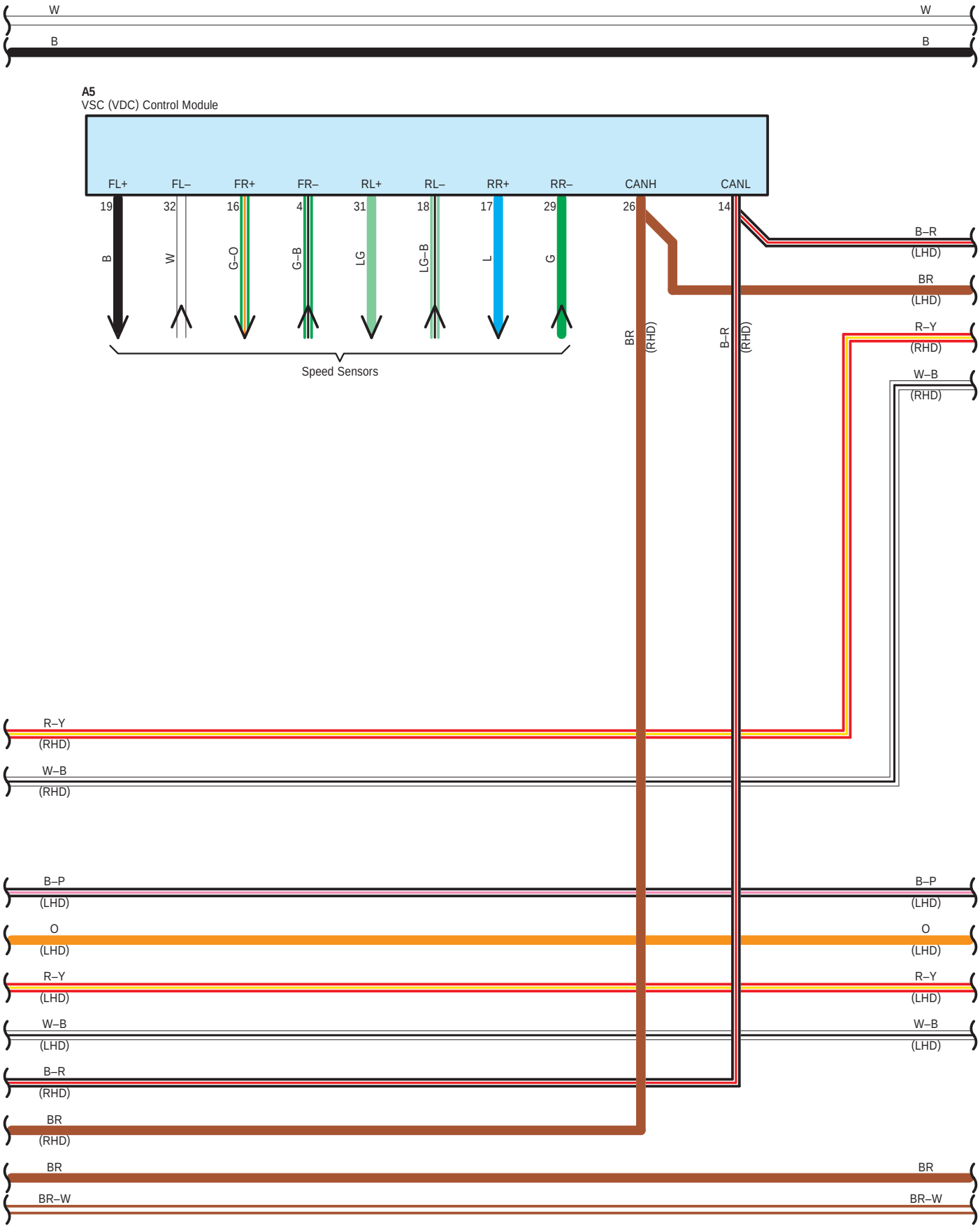
W
B
A5
VSC (VDC) Control Module
FL+
FL–
FR+
FR–
RL+
RL–
RR+
RR–
CANH
CANL
19
32
16
4
31
18
17
29
26
14
B
W
G–O
G–B
LG
LG–B
L
G
Speed Sensors
B–R
(LHD)
BR
(LHD)
R–Y
(RHD)
W–B
(RHD)
BR
(RHD)
B–R
(RHD)
B–P
(LHD)
O
(LHD)
BR–W

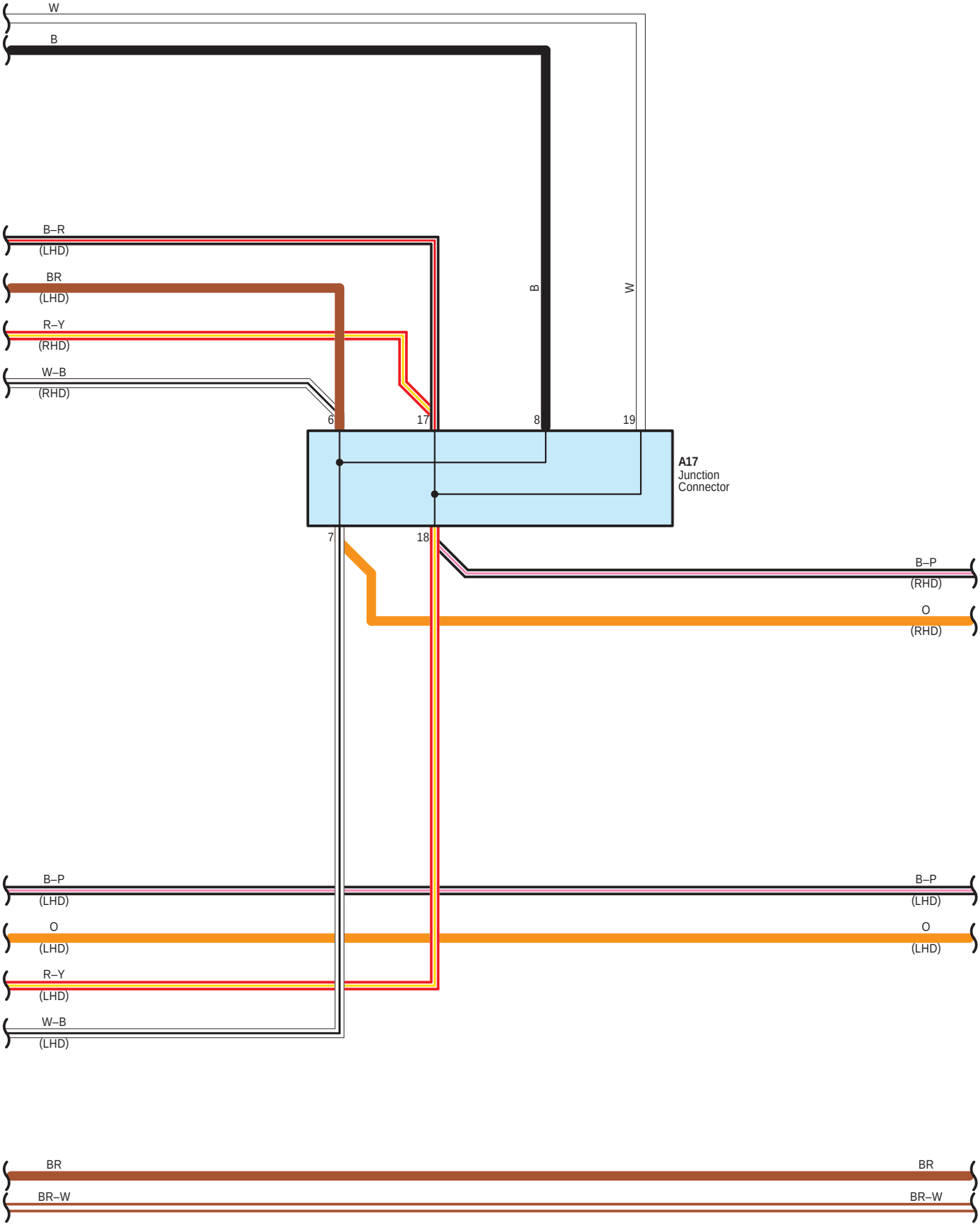
W
B
B–R
(LHD)
BR
(LHD)
R–Y
(RHD)
W–B
(RHD)
B
W
6
17
8
19
A17
Junction
Connector
7
18
B–P
(RHD)
O
(RHD)
B–P
(LHD)
O
(LHD)
R–Y
(LHD)
W–B
(LHD)
B–P
(LHD)
O
(LHD)
BR
BR–W
BR
BR–W

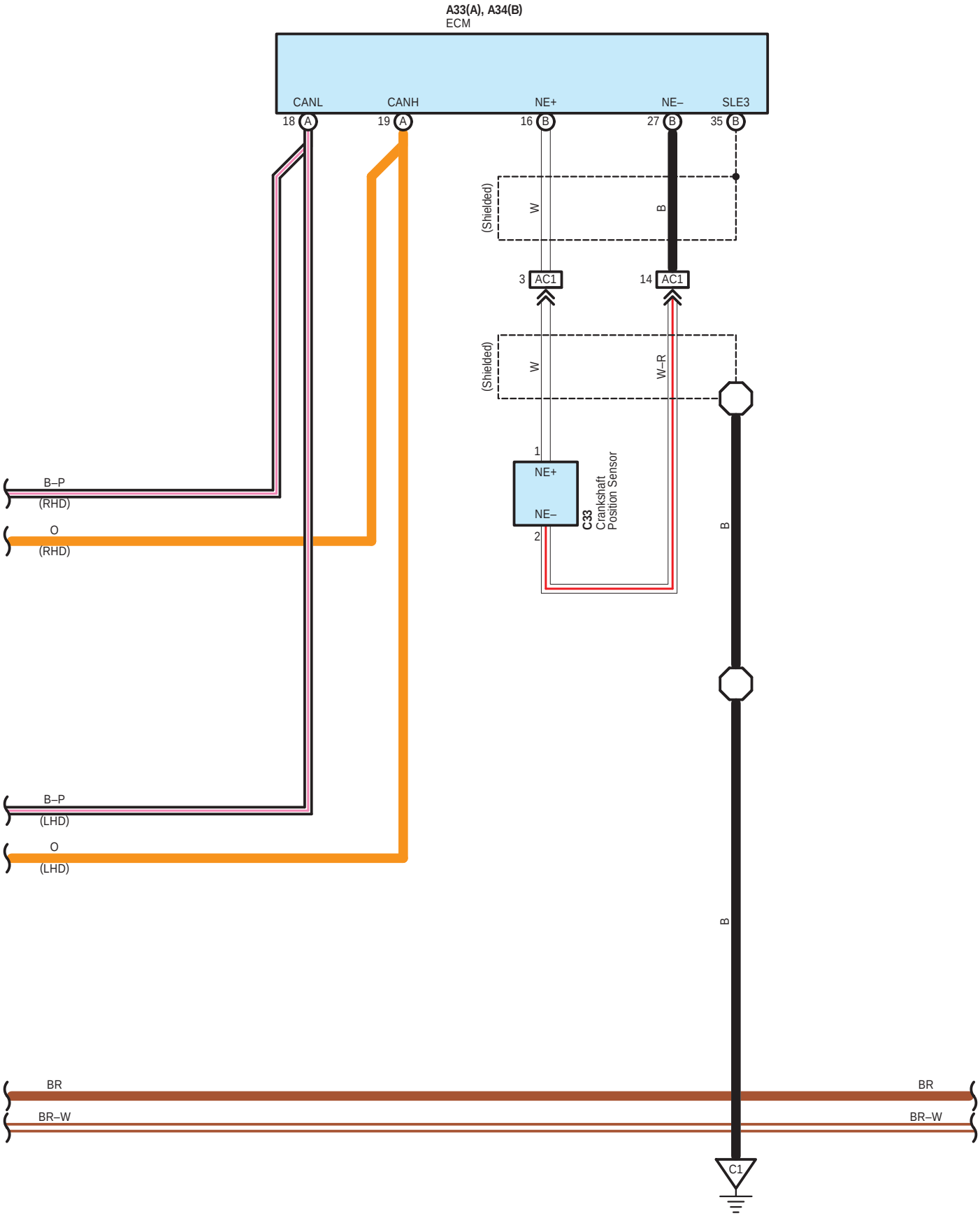
A33(A), A34(B)
ECM
CANL
CANH
NE+
NE–
SLE3
18 A
19 A
16 B
27 B
35 B
(Shielded)
W
B
3 AC1
14 AC1
(Shielded)
W
W–R
1
NE+
NE–
2
C33
Crankshaft
Position Sensor
B–P
(RHD)
O
(RHD)
B–P
(LHD)
O
(LHD)
B
B
BR
BR–W
BR
BR–W
C1

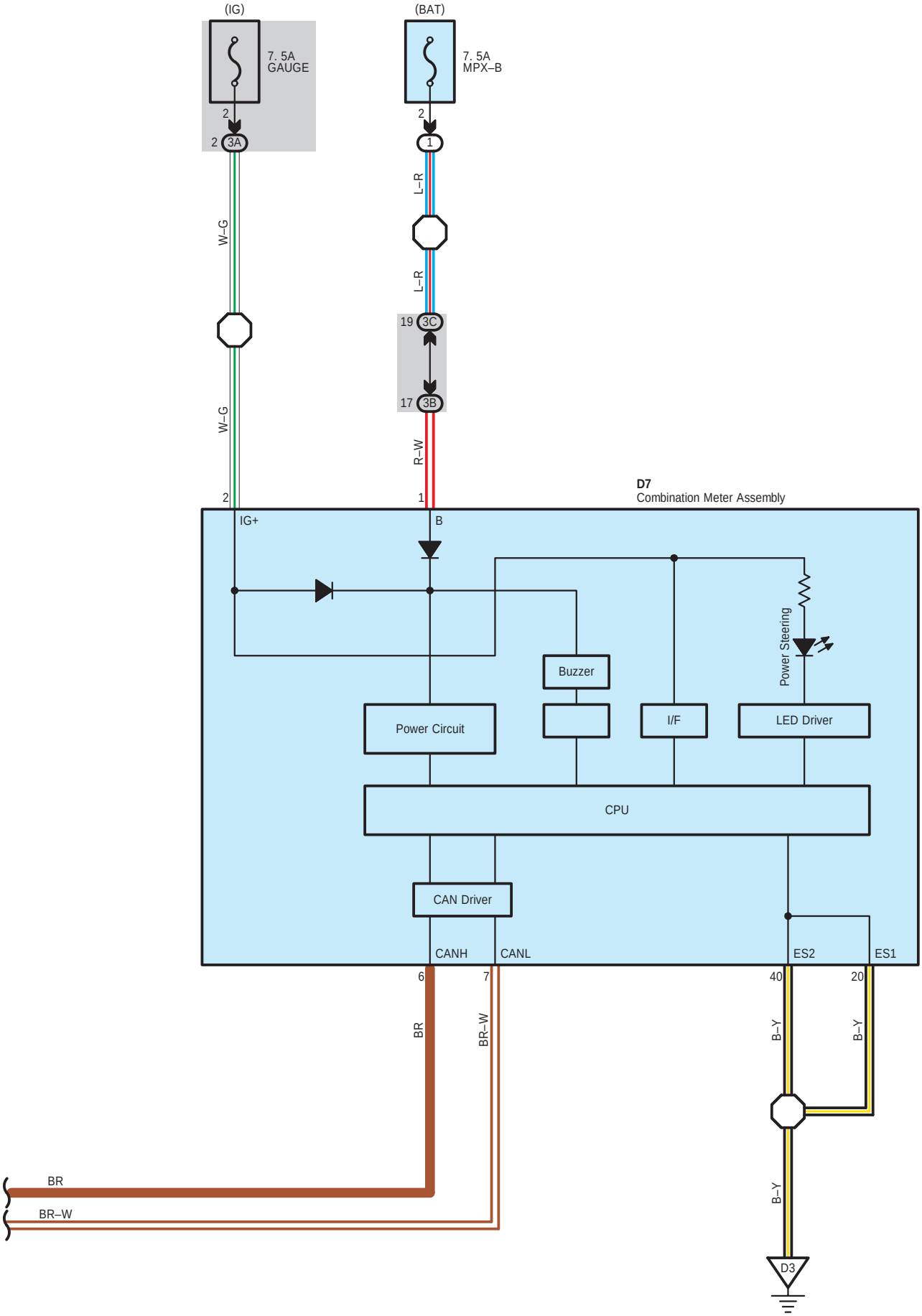
(IG)
7. 5A
GAUGE
2
2
3A
W–G
W–G
2
(BAT)
7. 5A
MPX–B
2
1
L–R
L–R
19
3C
17
3B
R–W
1
D7
Combination Meter Assembly
IG+
B
Buzzer
Power Steering
Power Circuit
I/F
LED Driver
CPU
CAN Driver
CANH
CANL
ES2
ES1
6
7
40
20
BR
BR–W
B–Y
B–Y
B–Y
BR
BR–W
D3

○ : **Parts Location**

Code		See Page	Code		See Page	Code		See Page
A5		39 (LHD)	A33	A	42 (LHD)	D43		41 (LHD)
		47 (RHD)			50 (RHD)			49 (RHD)
A14	A	42 (LHD)	A34	B	42 (LHD)	z1	C	42 (LHD)
		50 (RHD)			50 (RHD)			50 (RHD)
A15	B	42 (LHD)	C33		38 (LHD)	z2	D	42 (LHD)
		50 (RHD)			46 (RHD)			50 (RHD)
A17		42 (LHD)	D7		40 (LHD)			
		50 (RHD)			48 (RHD)			

: **Relay Blocks**

Code	See Page	Relay Blocks (Relay Block Location)
1	24	Engine Room R/B (Engine Compartment Right)

: **Junction Block and Wire Harness Connector**

Code	See Page	Junction Block and Wire Harness (Connector Location)
3A	26	Instrument Panel Wire and Instrument Panel J/B Assembly (Instrument Panel Reinforcement)
3B		
3C	26	Engine Room Main Wire and Instrument Panel J/B Assembly (Instrument Panel Reinforcement)

: **Connector Joining Wire Harness and Wire Harness**

Code	See Page	Joining Wire Harness and Wire Harness (Connector Location)
AC1	54 (LHD)	Engine Room Main Wire and Engine Wire (Engine Unit)
	58 (RHD)	
AD1	55 (LHD)	Engine Room Main Wire and Instrument Panel Wire (Cowl Side Panel RH)
	59 (RHD)	
AD2	55 (LHD)	Engine Room Main Wire and Instrument Panel Wire (Instrument Panel Reinforcement)
	59 (RHD)	

▽ : **Ground Points**

Code	See Page	Ground Points Location
A2	55 (LHD)	Cowl Side Panel LH
	59 (RHD)	Cowl Side Panel RH
C1	54 (LHD)	Engine Unit
	58 (RHD)	
D3	55 (LHD)	Instrument Panel Brace RH
	59 (RHD)	Instrument Panel Brace LH

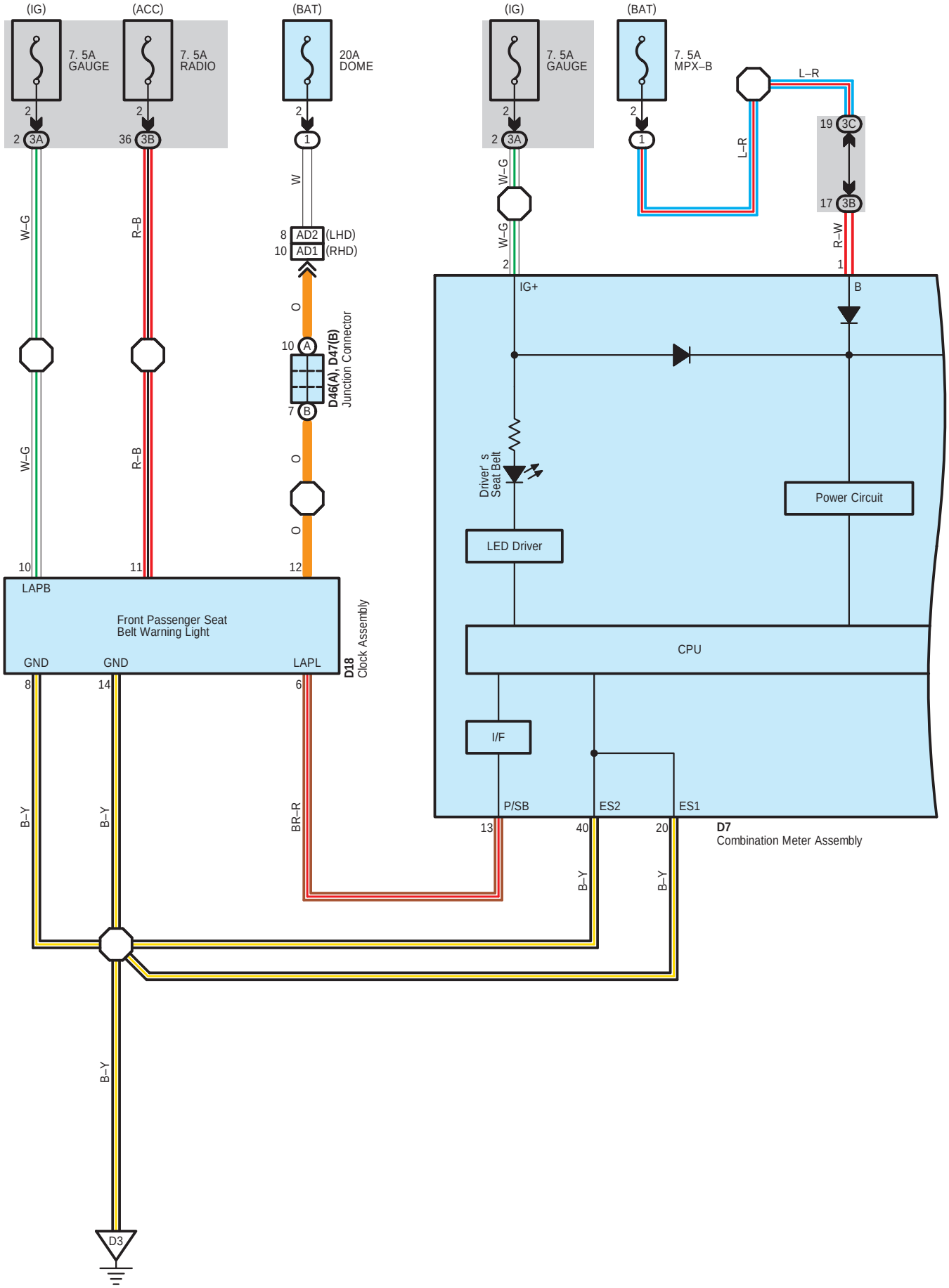
(IG)
(ACC)
(BAT)
(IG)
(BAT)
7. 5A GAUGE
7. 5A RADIO
20A DOME
7. 5A GAUGE
7. 5A MPX–B
L–R
W–G
R–B
W
O
R–W
AD2 (LHD)
AD1 (RHD)
D46(A), D47(B) Junction Connector
IG+
B
Driver' s Seat Belt
Power Circuit
LED Driver
CPU
I/F
LAPB
Front Passenger Seat Belt Warning Light
GND
GND
LAPL
D18 Clock Assembly
P/SB
ES2
ES1
D7 Combination Meter Assembly
BR–R
B–Y
D3

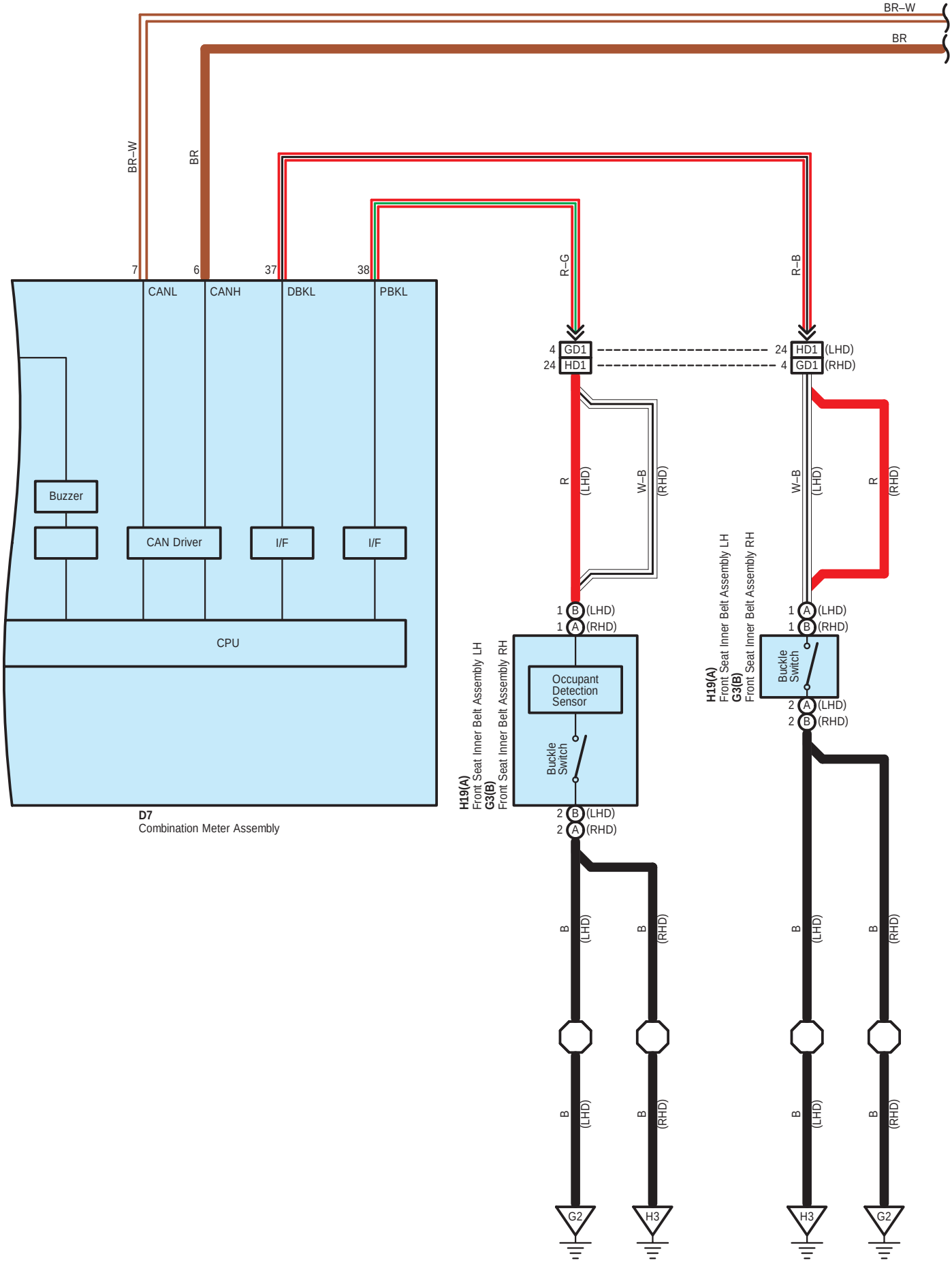
BR–W
BR
BR–W
BR
7
6
37
38
CANL
CANH
DBKL
PBKL
Buzzer
CAN Driver
I/F
I/F
CPU
D7
Combination Meter Assembly
R–G
R–B
4 GD1
24 HD1
24 HD1 (LHD)
4 GD1 (RHD)
R (LHD)
W–B (RHD)
W–B (LHD)
R (RHD)
1 B (LHD)
1 A (RHD)
1 A (LHD)
1 B (RHD)
H19(A)
Front Seat Inner Belt Assembly LH
G3(B)
Front Seat Inner Belt Assembly RH
Occupant Detection Sensor
Buckle Switch
2 B (LHD)
2 A (RHD)
2 A (LHD)
2 B (RHD)
B (LHD)
B (RHD)
G2
H3

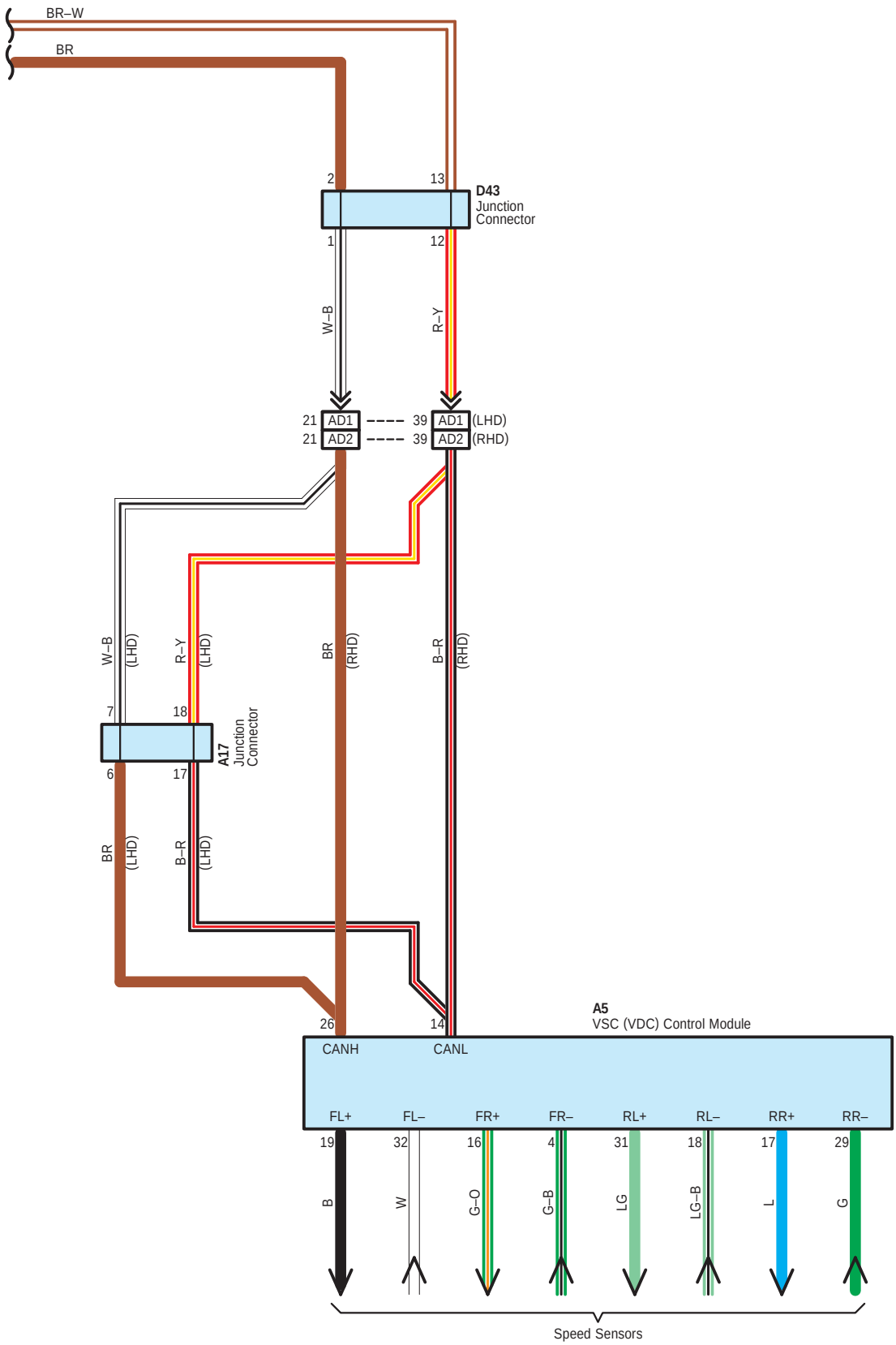
BR–W
BR
2
13
D43
Junction
Connector
1
12
W–B
R–Y
21 AD1
21 AD2
39 AD1 (LHD)
39 AD2 (RHD)
W–B (LHD)
R–Y (LHD)
BR (RHD)
B–R (RHD)
7
18
A17
Junction
Connector
6
17
BR (LHD)
B–R (LHD)
26
14
A5
VSC (VDC) Control Module
CANH
CANL
FL+
FL–
FR+
FR–
RL+
RL–
RR+
RR–
19
32
16
4
31
18
17
29
B
W
G–O
G–B
LG
LG–B
L
G
Speed Sensors

: Parts Location

Code	See Page	Code		See Page	Code		See Page
A5	39 (LHD)	D18		48 (RHD)	D47	B	49 (RHD)
	47 (RHD)	D43		41 (LHD)	G3	B	44 (LHD)
A17	42 (LHD)			49 (RHD)			52 (RHD)
D7	40 (LHD)	D46	A	41 (LHD)	H19	A	45 (LHD)
	48 (RHD)			49 (RHD)			53 (RHD)
D18	40 (LHD)	D47	B	41 (LHD)			

: Relay Blocks

Code	See Page	Relay Blocks (Relay Block Location)
1	24	Engine Room R/B (Engine Compartment Right)

: Junction Block and Wire Harness Connector

Code	See Page	Junction Block and Wire Harness (Connector Location)
3A	26	Instrument Panel Wire and Instrument Panel J/B Assembly (Instrument Panel Reinforcement)
3B		
3C	26	Engine Room Main Wire and Instrument Panel J/B Assembly (Instrument Panel Reinforcement)

: Connector Joining Wire Harness and Wire Harness

Code	See Page	Joining Wire Harness and Wire Harness (Connector Location)
AD1	55 (LHD)	Engine Room Main Wire and Instrument Panel Wire (Cowl Side Panel RH)
	59 (RHD)	
AD2	55 (LHD)	Engine Room Main Wire and Instrument Panel Wire (Instrument Panel Reinforcement)
	59 (RHD)	
GD1	55 (LHD)	No. 1 Floor Wire and Instrument Panel Wire (Cowl Side Panel RH)
	59 (RHD)	
HD1	55 (LHD)	No. 2 Floor Wire and Instrument Panel Wire (Cowl Side Panel LH)
	59 (RHD)	

: Ground Points

Code	See Page	Ground Points Location
D3	55 (LHD)	Instrument Panel Brace RH
	59 (RHD)	Instrument Panel Brace LH
G2	56 (LHD)	Quarter Wheel House Panel RH
	60 (RHD)	
H3	56 (LHD)	Quarter Wheel House Panel LH
	60 (RHD)	

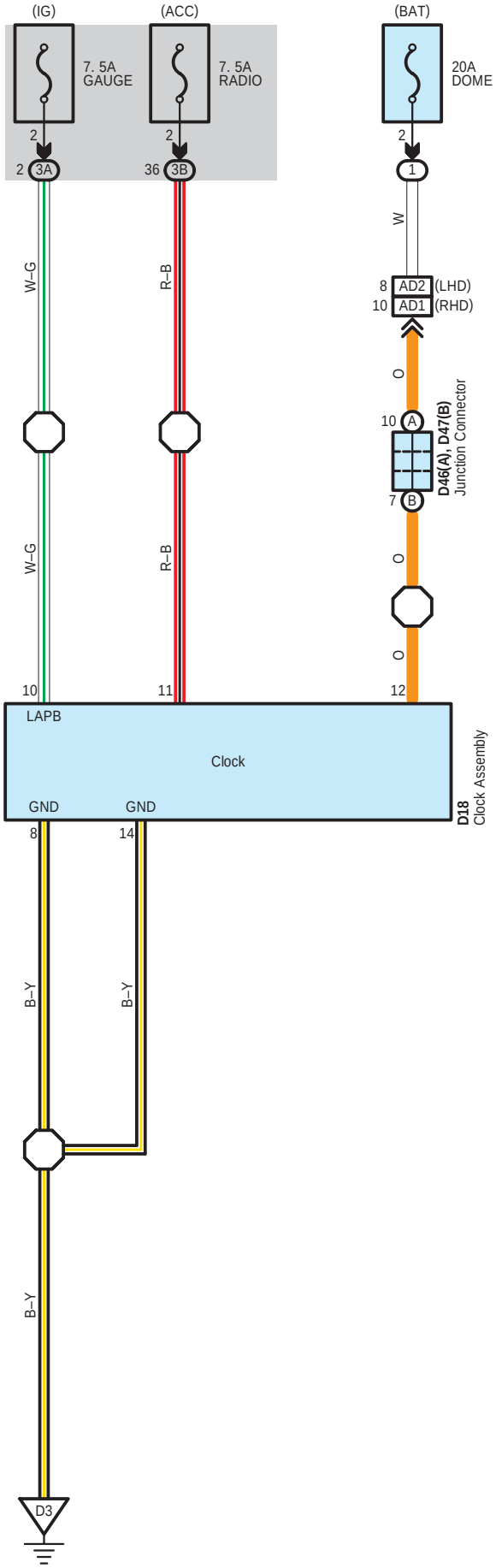
(IG)
(ACC)
(BAT)
7. 5A
GAUGE
7. 5A
RADIO
20A
DOME
2
2
2
2 3A
36 3B
1
W
W–G
R–B
8 AD2 (LHD)
10 AD1 (RHD)
O
10 A
7 B
D46(A), D47(B)
Junction Connector
W–G
R–B
O
O
10
11
12
LAPB
Clock
GND
GND
D18
Clock Assembly
8
14
B–Y
B–Y
B–Y
D3

: Parts Location

Code	See Page	Code		See Page	Code		See Page
D18	40 (LHD)	D46	A	41 (LHD)	D47	B	41 (LHD)
	48 (RHD)			49 (RHD)			49 (RHD)

: Relay Blocks

Code	See Page	Relay Blocks (Relay Block Location)
1	24	Engine Room R/B (Engine Compartment Right)

: Junction Block and Wire Harness Connector

Code	See Page	Junction Block and Wire Harness (Connector Location)
3A	26	Instrument Panel Wire and Instrument Panel J/B Assembly (Instrument Panel Reinforcement)
3B		

: Connector Joining Wire Harness and Wire Harness

Code	See Page	Joining Wire Harness and Wire Harness (Connector Location)
AD1	59 (RHD)	Engine Room Main Wire and Instrument Panel Wire (Cowl Side Panel RH)
AD2	55 (LHD)	Engine Room Main Wire and Instrument Panel Wire (Instrument Panel Reinforcement)

: Ground Points

Code	See Page	Ground Points Location
D3	55 (LHD)	Instrument Panel Brace RH
	59 (RHD)	Instrument Panel Brace LH

Power Window (LHD)

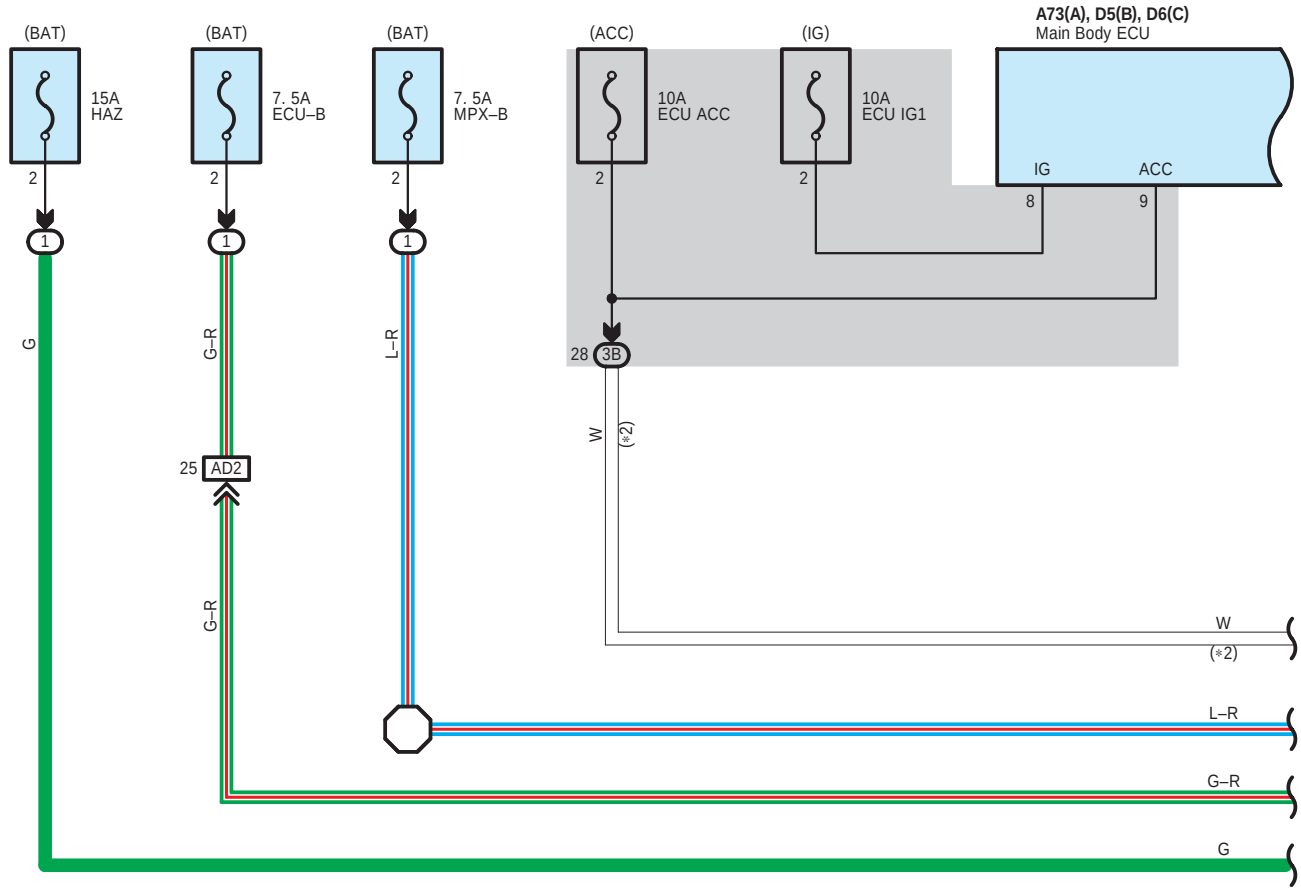

* 2 : w/ Entry & Start System

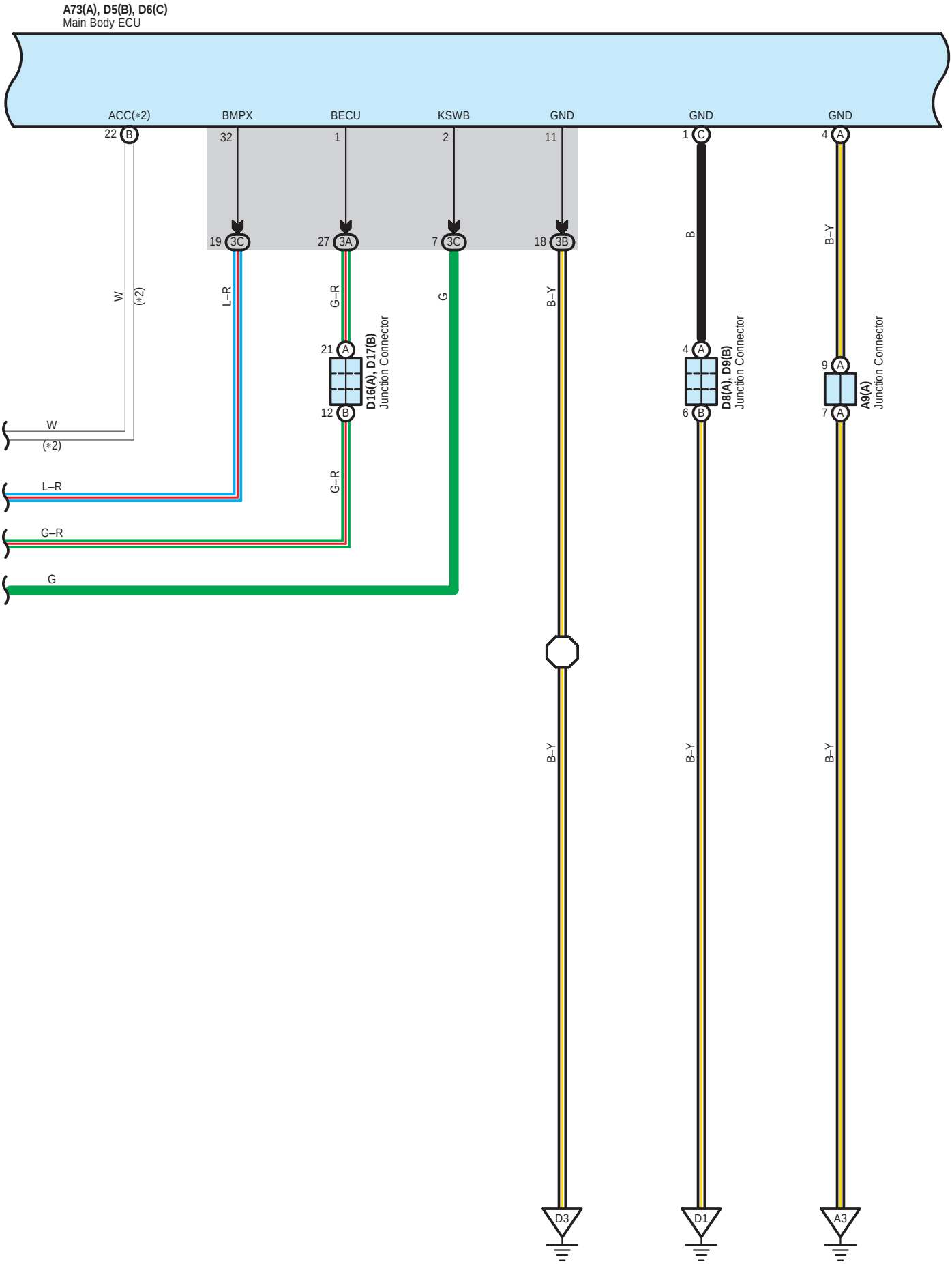
A73(A), D5(B), D6(C)
Main Body ECU
ACC(*2)
BMPX
BECU
KSWB
GND
GND
GND
22 B
32
1
2
11
1 C
4 A
19 3C
27 3A
7 3C
18 3B
W
(*2)
L–R
G–R
G
B–Y
B
B–Y
21 A
12 B
D16(A), D17(B)
Junction Connector
4 A
6 B
D8(A), D9(B)
Junction Connector
9 A
7 A
A9(A)
Junction Connector
W
(*2)
L–R
G–R
G
D3
D1
A3

Power Window (LHD)

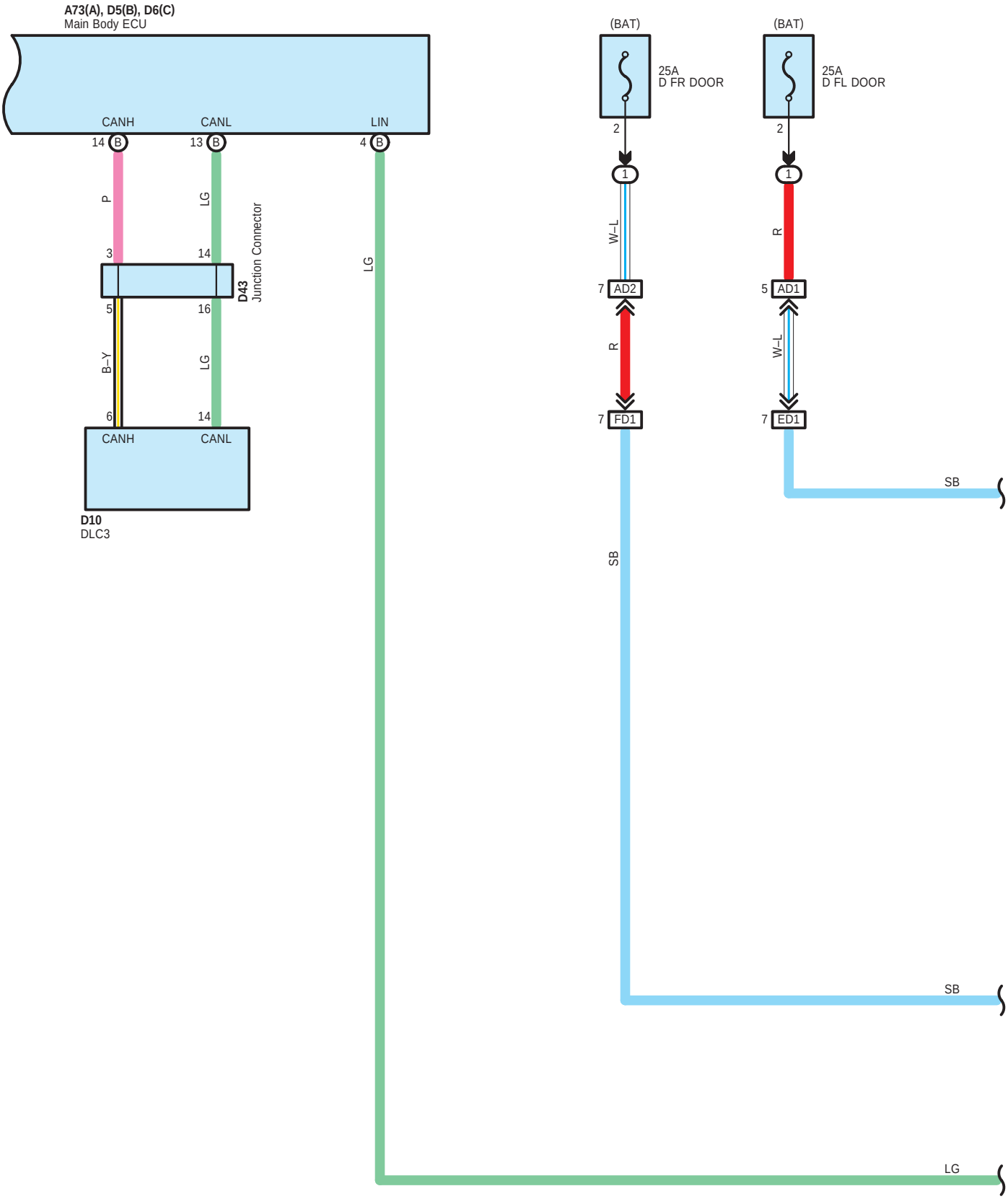

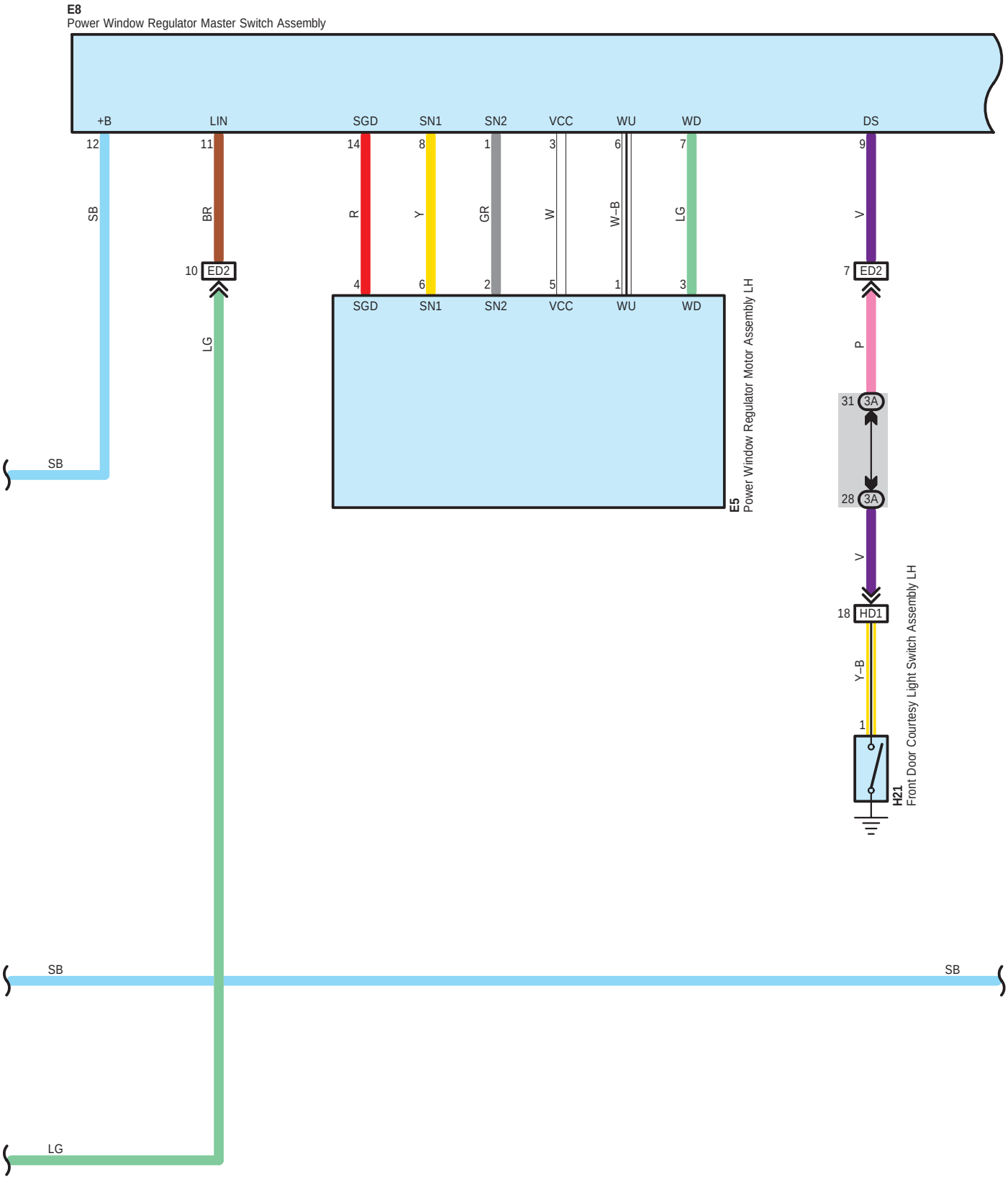
E8
Power Window Regulator Master Switch Assembly
+B
LIN
SGD
SN1
SN2
VCC
WU
WD
DS
12
11
14
8
1
3
6
7
9
SB
BR
R
Y
GR
W
W–B
LG
V
10
ED2
4
6
2
5
1
3
7
ED2
SGD
SN1
SN2
VCC
WU
WD
LG
P
31
3A
28
3A
E5
Power Window Regulator Motor Assembly LH
SB
V
18
HD1
Y–B
1
H21
Front Door Courtesy Light Switch Assembly LH
SB
SB
LG

Power Window (LHD)

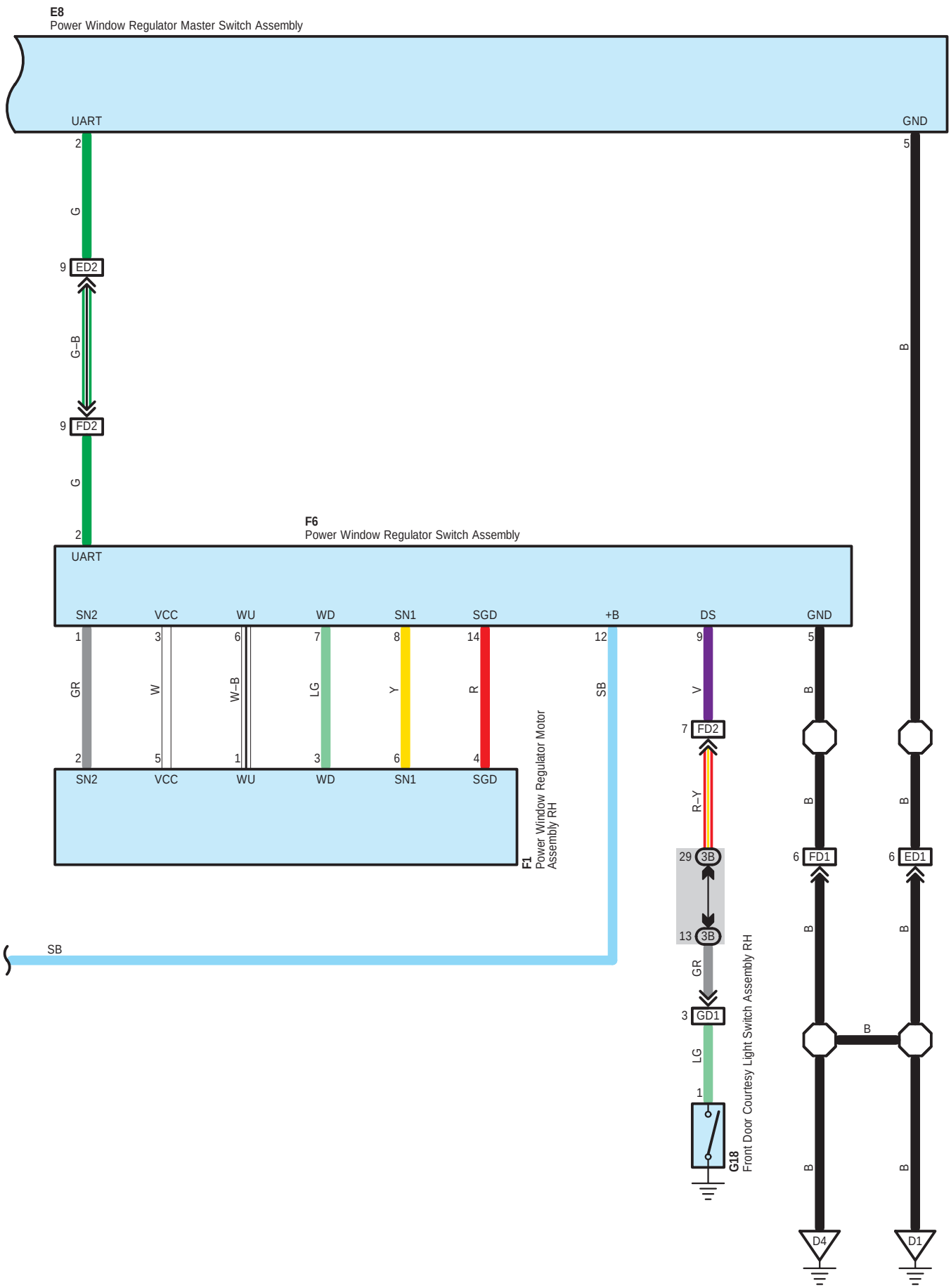

○ : **Parts Location**

Code		See Page	Code		See Page	Code	See Page
A9	A	42 (LHD)	D10		40 (LHD)	F1	44 (LHD)
A73	A	42 (LHD)	D16	A	40 (LHD)	F6	44 (LHD)
D5	B	40 (LHD)	D17	B	40 (LHD)	G18	44 (LHD)
D6	C	40 (LHD)	D43		41 (LHD)	H21	45 (LHD)
D8	A	40 (LHD)	E5		44 (LHD)		
D9	B	40 (LHD)	E8		44 (LHD)		

▭ : **Relay Blocks**

Code	See Page	Relay Blocks (Relay Block Location)
1	24	Engine Room R/B (Engine Compartment Right)

▭ : **Junction Block and Wire Harness Connector**

Code	See Page	Junction Block and Wire Harness (Connector Location)
3A	26	Instrument Panel Wire and Instrument Panel J/B Assembly (Instrument Panel Reinforcement)
3B		
3C	26	Engine Room Main Wire and Instrument Panel J/B Assembly (Instrument Panel Reinforcement)

▭ : **Connector Joining Wire Harness and Wire Harness**

Code	See Page	Joining Wire Harness and Wire Harness (Connector Location)
AD1	55 (LHD)	Engine Room Main Wire and Instrument Panel Wire (Cowl Side Panel RH)
AD2	55 (LHD)	Engine Room Main Wire and Instrument Panel Wire (Instrument Panel Reinforcement)
ED1	55 (LHD)	Front Door Wire LH and Instrument Panel Wire (Cowl Side Panel LH)
ED2		
FD1	55 (LHD)	Front Door Wire RH and Instrument Panel Wire (Cowl Side Panel RH)
FD2		
GD1	55 (LHD)	No. 1 Floor Wire and Instrument Panel Wire (Cowl Side Panel RH)
HD1	55 (LHD)	No. 2 Floor Wire and Instrument Panel Wire (Cowl Side Panel LH)

▽ : **Ground Points**

Code	See Page	Ground Points Location
A3	55 (LHD)	Cowl Side Panel RH
D1	55 (LHD)	Cowl Side Panel LH
D3	55 (LHD)	Instrument Panel Brace RH
D4	55 (LHD)	Cowl Side Panel RH

Power Window (RHD)

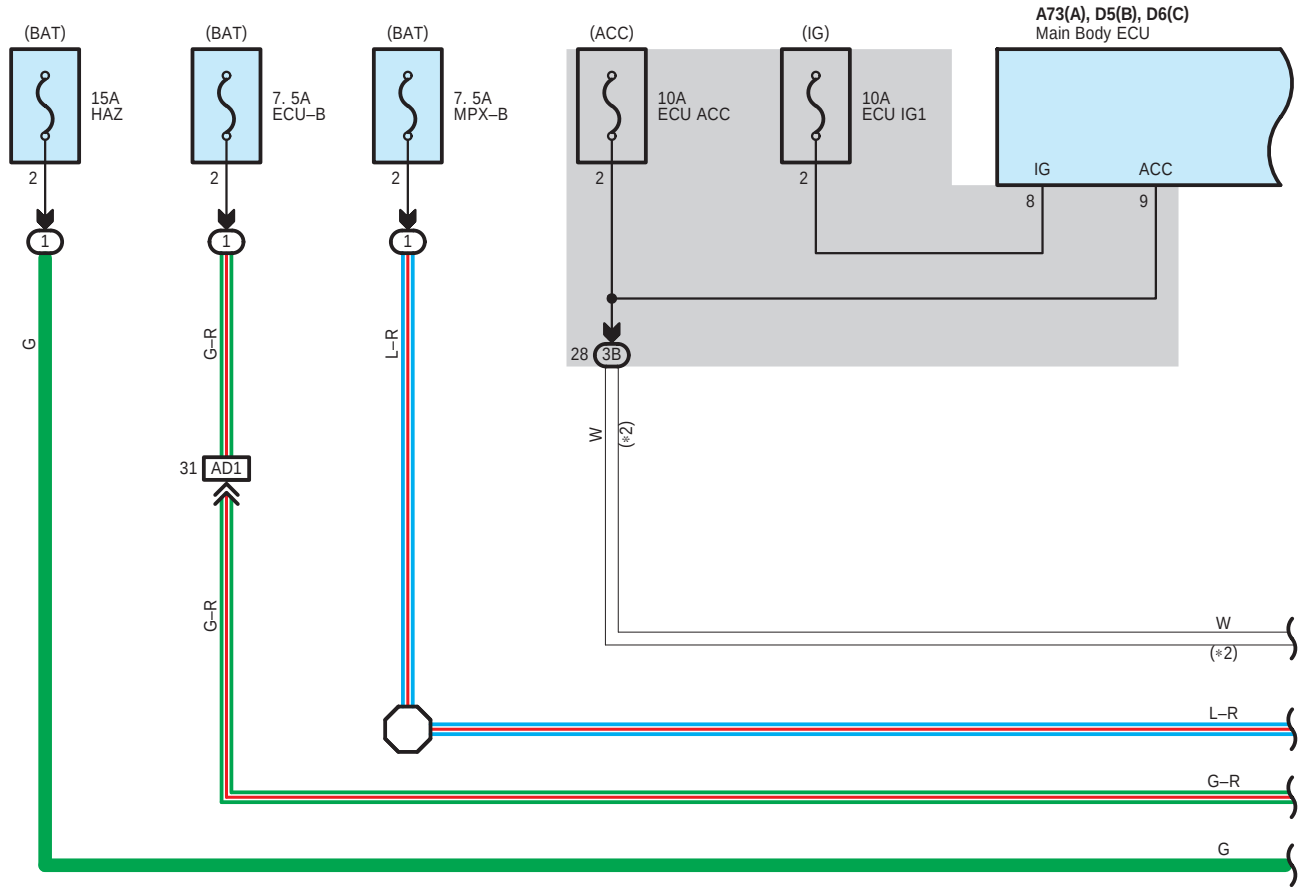

* 2 : w/ Entry & Start System

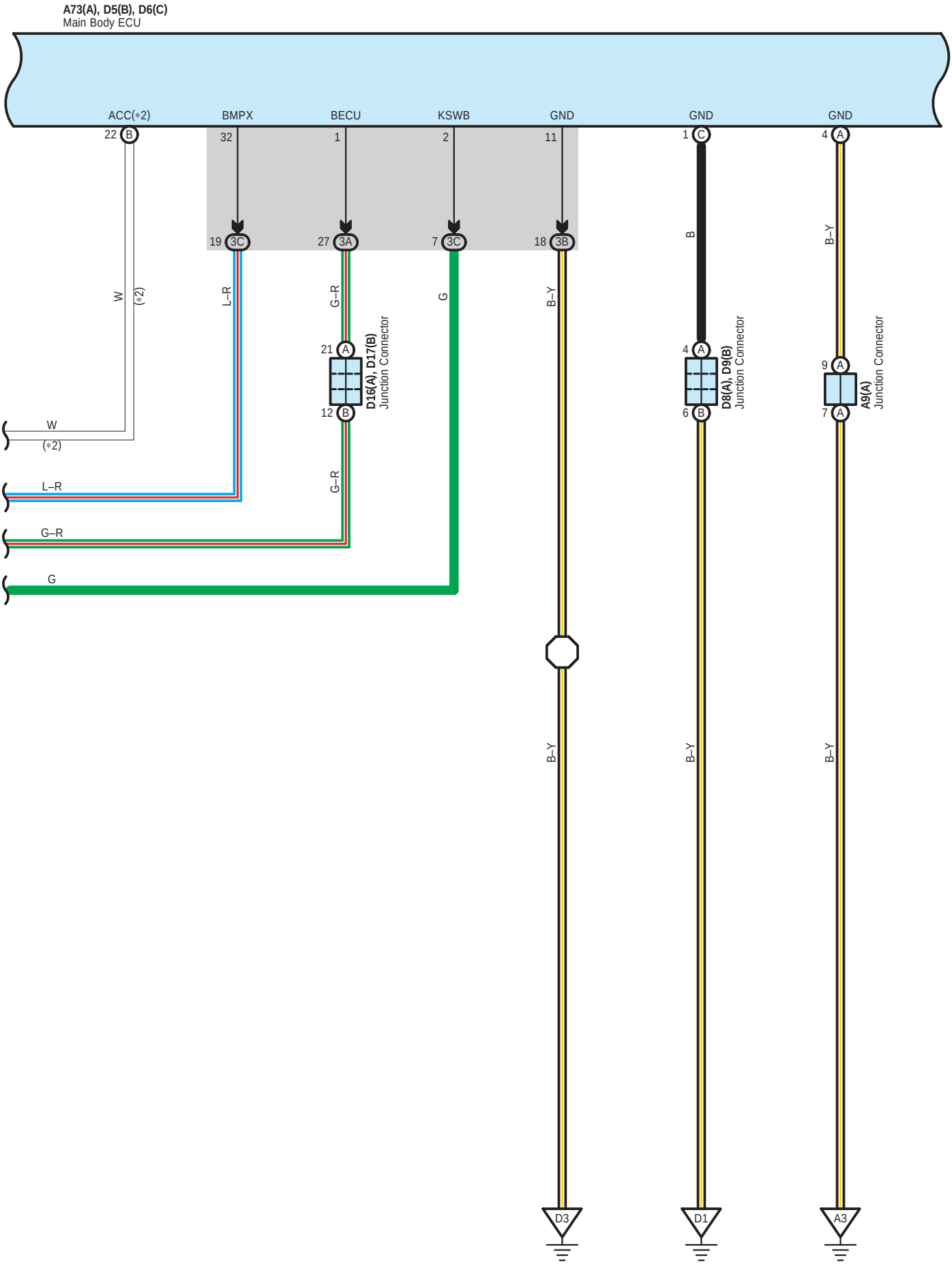
A73(A), D5(B), D6(C)
Main Body ECU
ACC(*2)
BMPX
BECU
KSWB
GND
GND
GND
22 B
32
1
2
11
1 C
4 A
19 3C
27 3A
7 3C
18 3B
W
(*2)
L–R
G–R
G
B–Y
B
B–Y
21 A
12 B
D16(A), D17(B)
Junction Connector
4 A
6 B
D8(A), D9(B)
Junction Connector
9 A
7 A
A9(A)
Junction Connector
W
(*2)
L–R
G–R
G
B–Y
B–Y
B–Y
D3
D1
A3

Power Window (RHD)

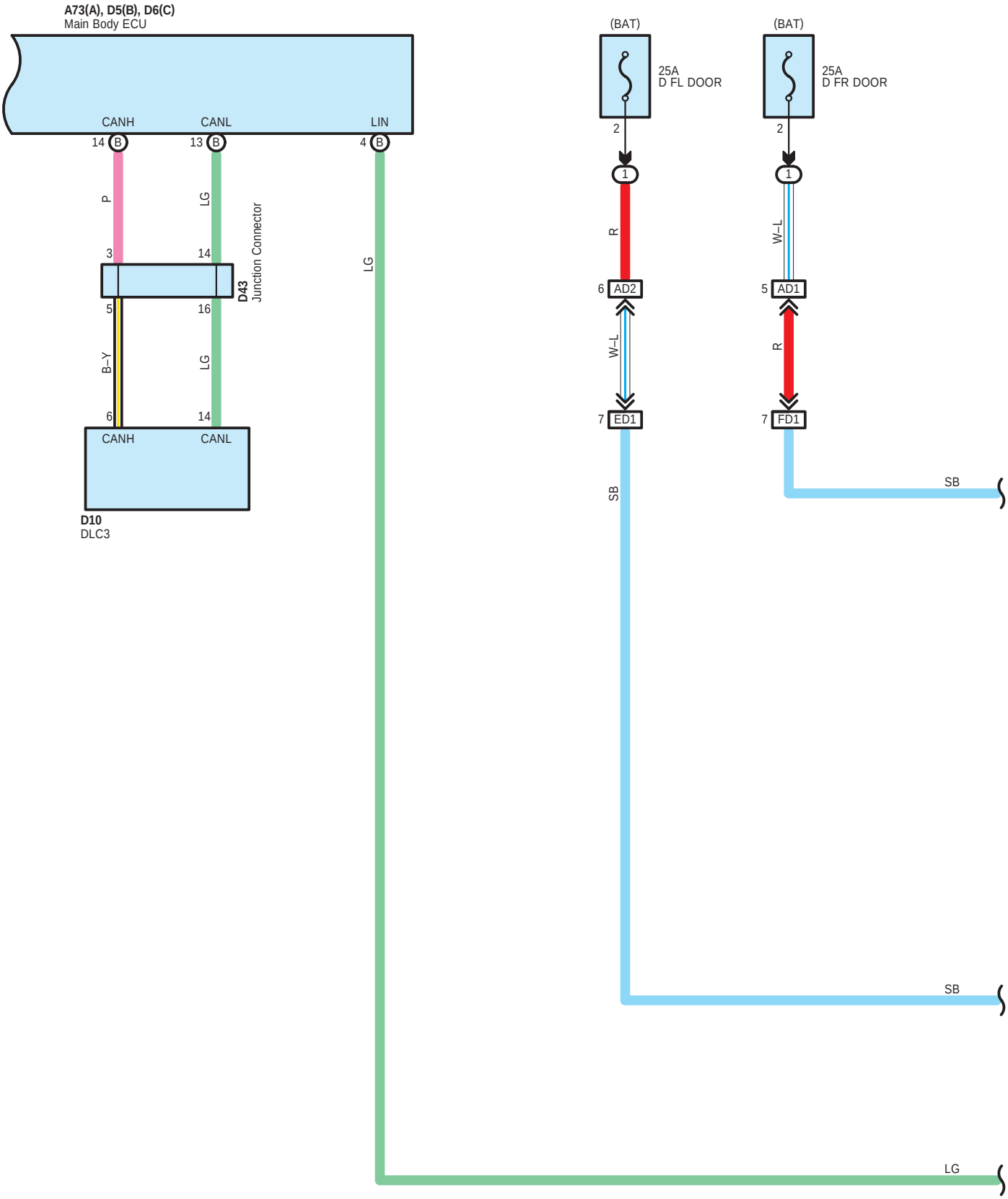

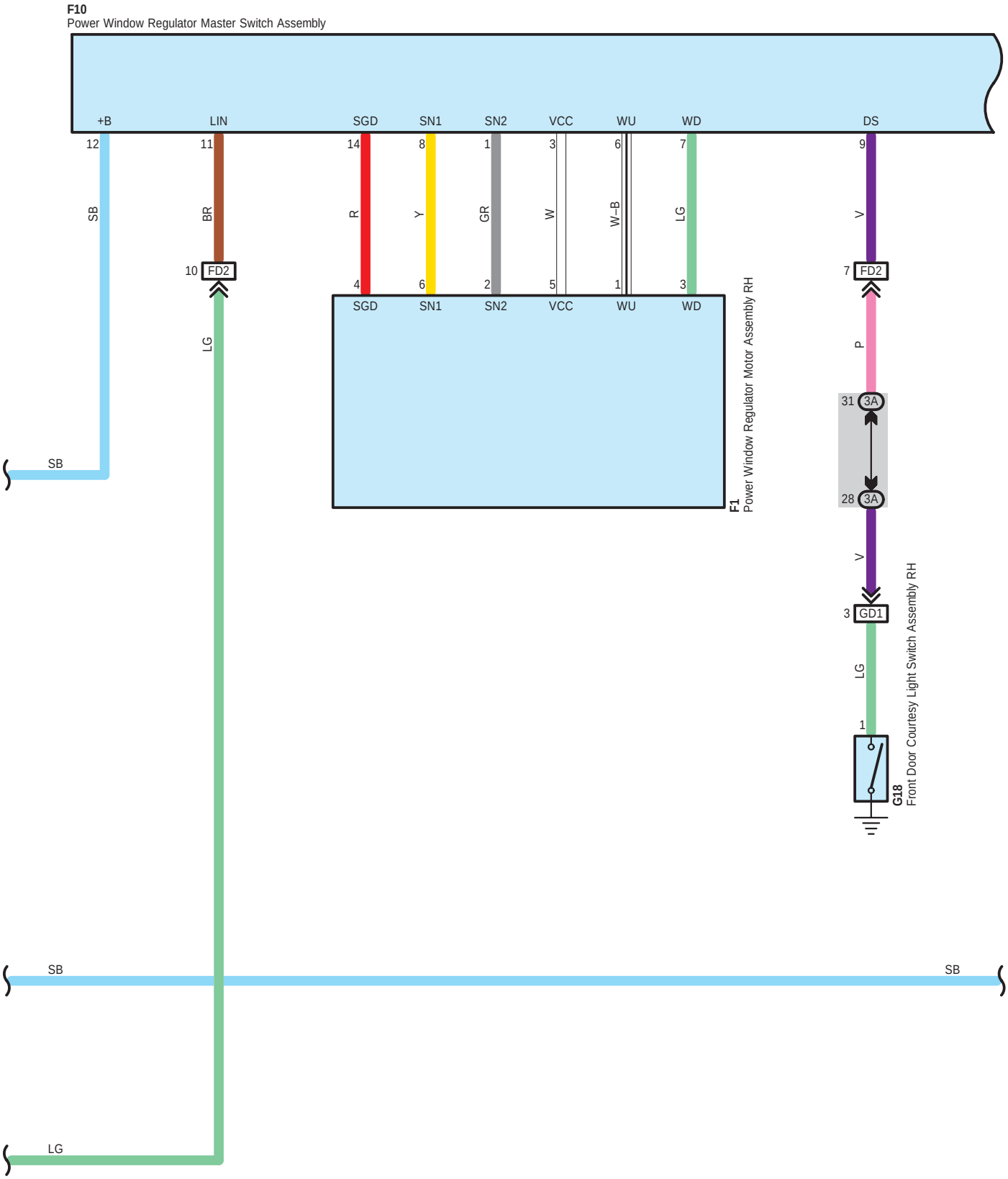
F10
Power Window Regulator Master Switch Assembly
+B
LIN
SGD
SN1
SN2
VCC
WU
WD
DS
12
11
14
8
1
3
6
7
9
SB
BR
R
Y
GR
W
W–B
LG
V
10
FD2
4
6
2
5
1
3
7
FD2
SGD
SN1
SN2
VCC
WU
WD
LG
P
31
3A
28
3A
F1
Power Window Regulator Motor Assembly RH
SB
V
3
GD1
LG
1
G18
Front Door Courtesy Light Switch Assembly RH
SB
SB
LG

Power Window (RHD)

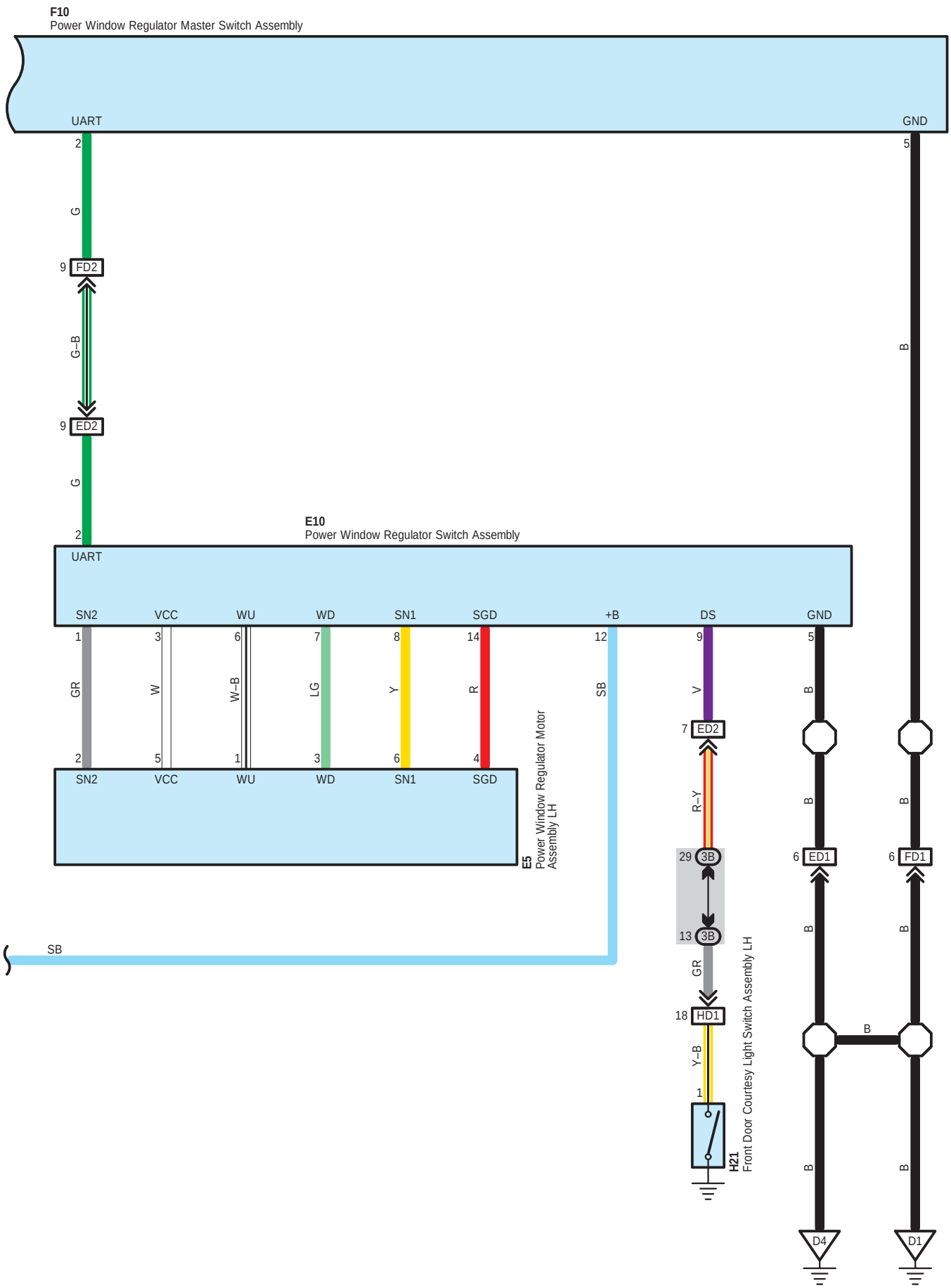

: Parts Location

Code		See Page	Code		See Page	Code	See Page
A9	A	50 (RHD)	D10		48 (RHD)	F1	52 (RHD)
A73	A	50 (RHD)	D16	A	48 (RHD)	F10	52 (RHD)
D5	B	48 (RHD)	D17	B	48 (RHD)	G18	52 (RHD)
D6	C	48 (RHD)	D43		49 (RHD)	H21	53 (RHD)
D8	A	48 (RHD)	E5		52 (RHD)		
D9	B	48 (RHD)	E10		52 (RHD)		

: Relay Blocks

Code	See Page	Relay Blocks (Relay Block Location)
1	24	Engine Room R/B (Engine Compartment Right)

: Junction Block and Wire Harness Connector

Code	See Page	Junction Block and Wire Harness (Connector Location)
3A	26	Instrument Panel Wire and Instrument Panel J/B Assembly (Instrument Panel Reinforcement)
3B		
3C	26	Engine Room Main Wire and Instrument Panel J/B Assembly (Instrument Panel Reinforcement)

: Connector Joining Wire Harness and Wire Harness

Code	See Page	Joining Wire Harness and Wire Harness (Connector Location)
AD1	59 (RHD)	Engine Room Main Wire and Instrument Panel Wire (Cowl Side Panel RH)
AD2	59 (RHD)	Engine Room Main Wire and Instrument Panel Wire (Instrument Panel Reinforcement)
ED1	59 (RHD)	Front Door Wire LH and Instrument Panel Wire (Cowl Side Panel LH)
ED2		
FD1	59 (RHD)	Front Door Wire RH and Instrument Panel Wire (Cowl Side Panel RH)
FD2		
GD1	59 (RHD)	No. 1 Floor Wire and Instrument Panel Wire (Cowl Side Panel RH)
HD1	59 (RHD)	No. 2 Floor Wire and Instrument Panel Wire (Cowl Side Panel LH)

: Ground Points

Code	See Page	Ground Points Location
A3	59 (RHD)	Cowl Side Panel LH
D1	59 (RHD)	Cowl Side Panel RH
D3	59 (RHD)	Instrument Panel Brace LH
D4	59 (RHD)	Cowl Side Panel LH

Door Lock Control

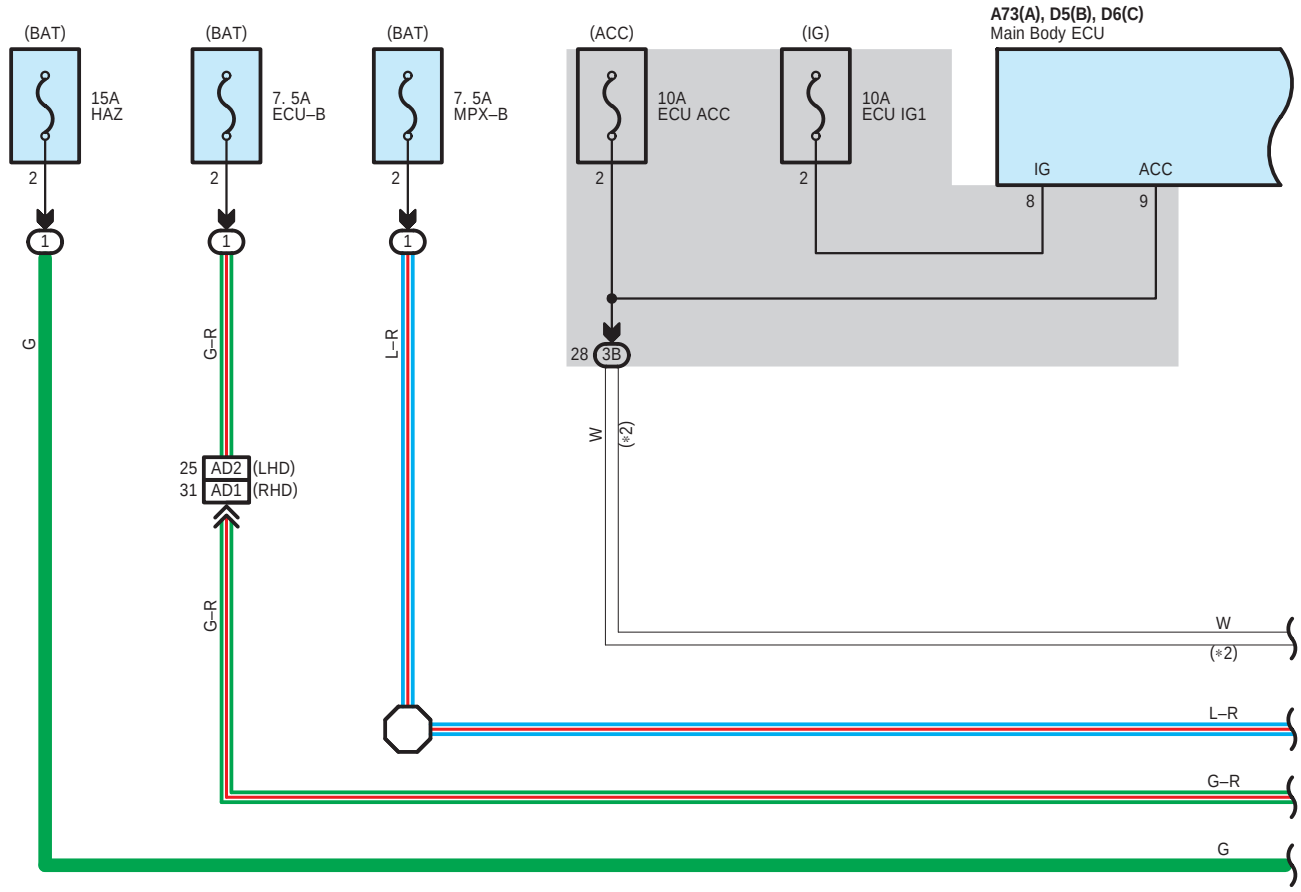

* 2 : w/ Entry & Start System
* 3 : w/o Entry & Start System

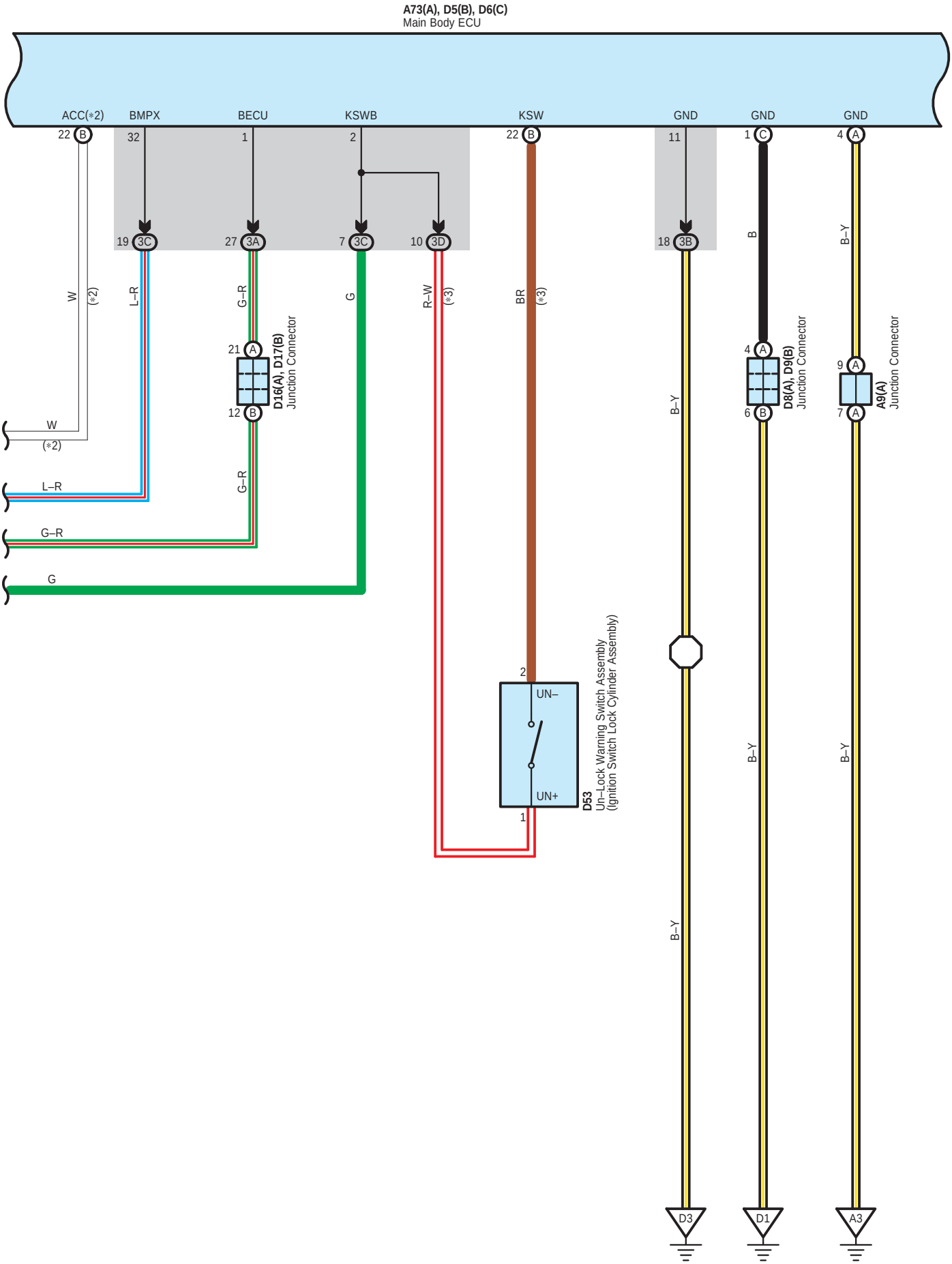
A73(A), D5(B), D6(C)
Main Body ECU
ACC(*2)
BMPX
BECU
KSWB
KSW
GND
GND
GND
22 B
32
1
2
22 B
11
1 C
4 A
19 3C
27 3A
7 3C
10 3D
18 3B
W
(*2)
L–R
G–R
G
R–W
(*3)
BR
(*3)
B
B–Y
21 A
12 B
D16(A), D17(B)
Junction Connector
4 A
6 B
D8(A), D9(B)
Junction Connector
9 A
7 A
A9(A)
Junction Connector
W
(*2)
L–R
G–R
G
2
UN–
UN+
1
D53
Un–Lock Warning Switch Assembly
(Ignition Switch Lock Cylinder Assembly)
B–Y
B–Y
B–Y
B–Y
D3
D1
A3

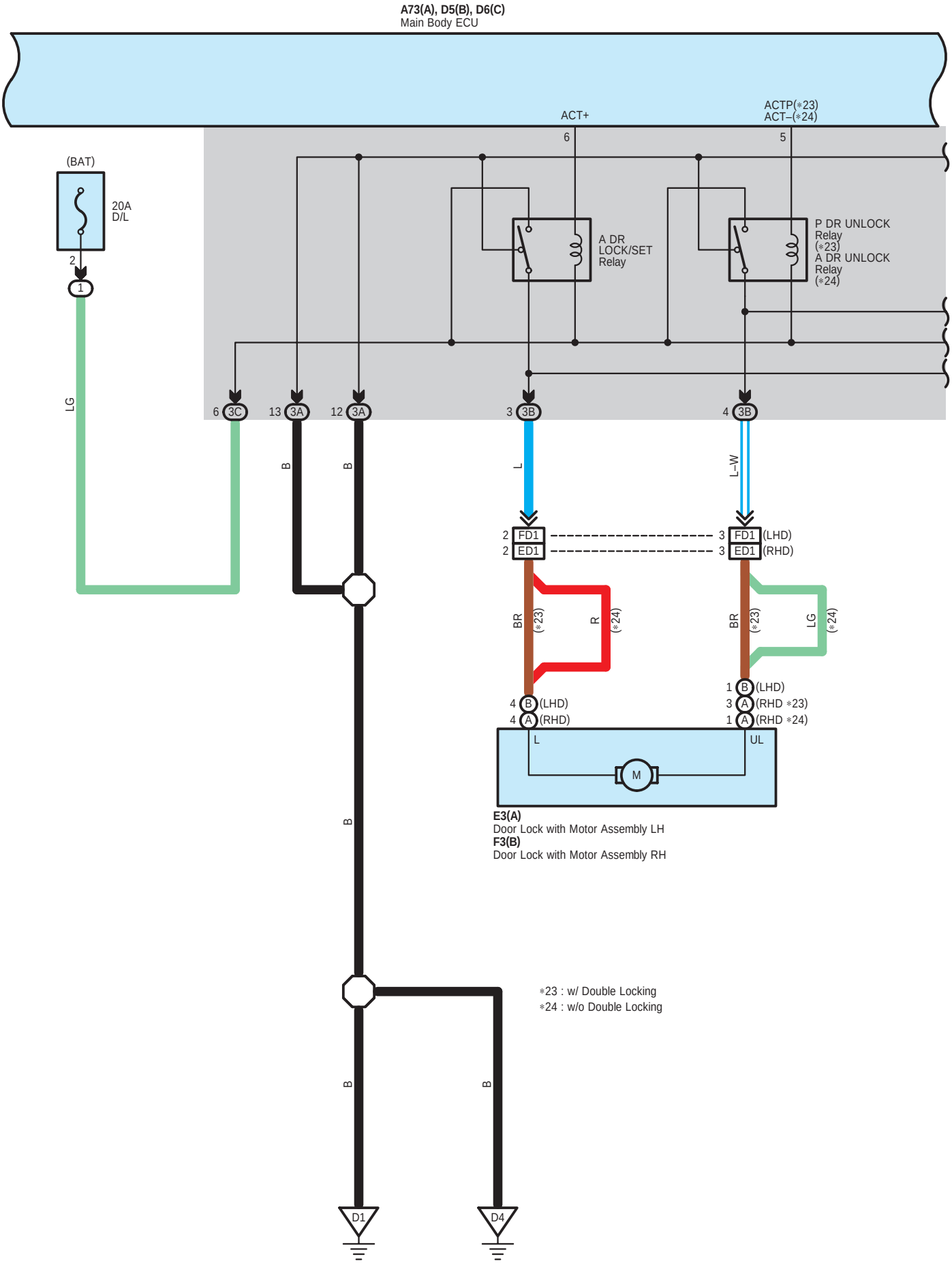
A73(A), D5(B), D6(C)
Main Body ECU
ACT+
6
ACTP(*23)
ACT–(*24)
5
(BAT)
20A
D/L
2
1
A DR
LOCK/SET
Relay
P DR UNLOCK
Relay
(*23)
A DR UNLOCK
Relay
(*24)
LG
6 3C
13 3A
12 3A
3 3B
4 3B
B
B
L
L–W
2 FD1
2 ED1
3 FD1 (LHD)
3 ED1 (RHD)
BR
(*23)
R
(*24)
BR
(*23)
LG
(*24)
4 B (LHD)
4 A (RHD)
1 B (LHD)
3 A (RHD *23)
1 A (RHD *24)
L
UL
M
E3(A)
Door Lock with Motor Assembly LH
F3(B)
Door Lock with Motor Assembly RH
B
*23 : w/ Double Locking
*24 : w/o Double Locking
B
B
D1
D4

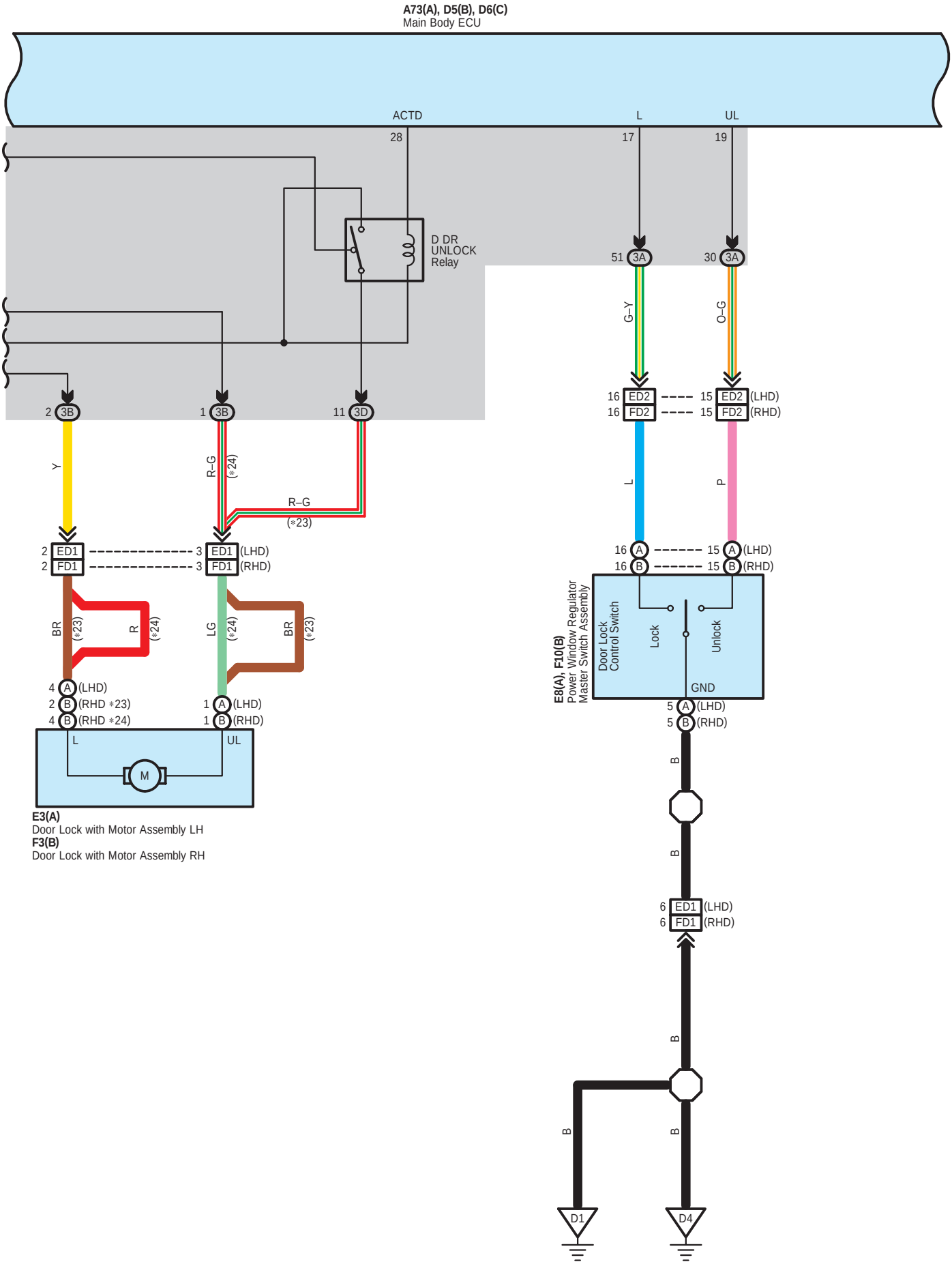
A73(A), D5(B), D6(C)
Main Body ECU
ACTD
28
L
17
UL
19
D DR
UNLOCK
Relay
51 3A
30 3A
G–Y
O–G
16 ED2
16 FD2
15 ED2 (LHD)
15 FD2 (RHD)
2 3B
1 3B
11 3D
Y
R–G
(*24)
R–G
(*23)
L
P
2 ED1
2 FD1
3 ED1 (LHD)
3 FD1 (RHD)
16 A
16 B
15 A (LHD)
15 B (RHD)
BR
(*23)
R
(*24)
LG
(*24)
BR
(*23)
E8(A), F10(B)
Power Window Regulator
Master Switch Assembly
Door Lock
Control Switch
Lock
Unlock
GND
4 A (LHD)
2 B (RHD *23)
4 B (RHD *24)
1 A (LHD)
1 B (RHD)
5 A (LHD)
5 B (RHD)
L
UL
M
B
B
6 ED1 (LHD)
6 FD1 (RHD)
B
B
B
D1
D4
E3(A)
Door Lock with Motor Assembly LH
F3(B)
Door Lock with Motor Assembly RH

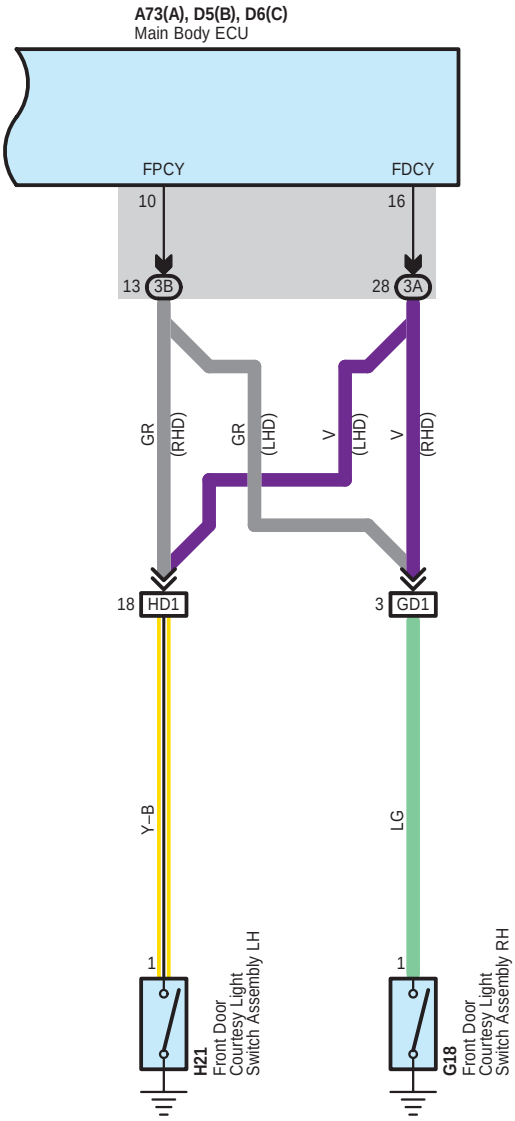
A73(A), D5(B), D6(C)
Main Body ECU
FPCY
FDCY
10
16
13 3B
28 3A
GR (RHD)
GR (LHD)
V (LHD)
V (RHD)
18 HD1
3 GD1
Y–B
LG
1
1
H21
Front Door
Courtesy Light
Switch Assembly LH
G18
Front Door
Courtesy Light
Switch Assembly RH

○ : Parts Location

Code		See Page	Code		See Page	Code		See Page
A9	A	42 (LHD)	D9	B	40 (LHD)	E8	A	44 (LHD)
		50 (RHD)			48 (RHD)	F3	B	44 (LHD)
A73	A	42 (LHD)	D16	A	40 (LHD)			52 (RHD)
		50 (RHD)			48 (RHD)	F10	B	52 (RHD)
D5	B	40 (LHD)	D17	B	40 (LHD)	G18		44 (LHD)
		48 (RHD)			48 (RHD)			52 (RHD)
D6	C	40 (LHD)	D53		41 (LHD)	H21		45 (LHD)
		48 (RHD)			49 (RHD)			53 (RHD)
D8	A	40 (LHD)	E3	A	44 (LHD)			
		48 (RHD)			52 (RHD)			

⬭ : Relay Blocks

Code	See Page	Relay Blocks (Relay Block Location)
1	24	Engine Room R/B (Engine Compartment Right)

⬭ : Junction Block and Wire Harness Connector

Code	See Page	Junction Block and Wire Harness (Connector Location)
3A	26	Instrument Panel Wire and Instrument Panel J/B Assembly (Instrument Panel Reinforcement)
3B		
3C	26	Engine Room Main Wire and Instrument Panel J/B Assembly (Instrument Panel Reinforcement)
3D	26	Instrument Panel Wire and Instrument Panel J/B Assembly (Instrument Panel Reinforcement)

▭ : Connector Joining Wire Harness and Wire Harness

Code	See Page	Joining Wire Harness and Wire Harness (Connector Location)
AD1	59 (RHD)	Engine Room Main Wire and Instrument Panel Wire (Cowl Side Panel RH)
AD2	55 (LHD)	Engine Room Main Wire and Instrument Panel Wire (Instrument Panel Reinforcement)
ED1	55 (LHD)	Front Door Wire LH and Instrument Panel Wire (Cowl Side Panel LH)
	59 (RHD)	
ED2	55 (LHD)	
FD1	55 (LHD)	Front Door Wire RH and Instrument Panel Wire (Cowl Side Panel RH)
	59 (RHD)	
FD2	59 (RHD)	
GD1	55 (LHD)	No. 1 Floor Wire and Instrument Panel Wire (Cowl Side Panel RH)
	59 (RHD)	
HD1	55 (LHD)	No. 2 Floor Wire and Instrument Panel Wire (Cowl Side Panel LH)
	59 (RHD)	

▽ : Ground Points

Code	See Page	Ground Points Location
A3	55 (LHD)	Cowl Side Panel RH
	59 (RHD)	Cowl Side Panel LH
D1	55 (LHD)	
	59 (RHD)	Cowl Side Panel RH
D3	55 (LHD)	Instrument Panel Brace RH
	59 (RHD)	Instrument Panel Brace LH
D4	55 (LHD)	Cowl Side Panel RH
	59 (RHD)	Cowl Side Panel LH

Wireless Door Lock Control (w/o Entry & Start System)

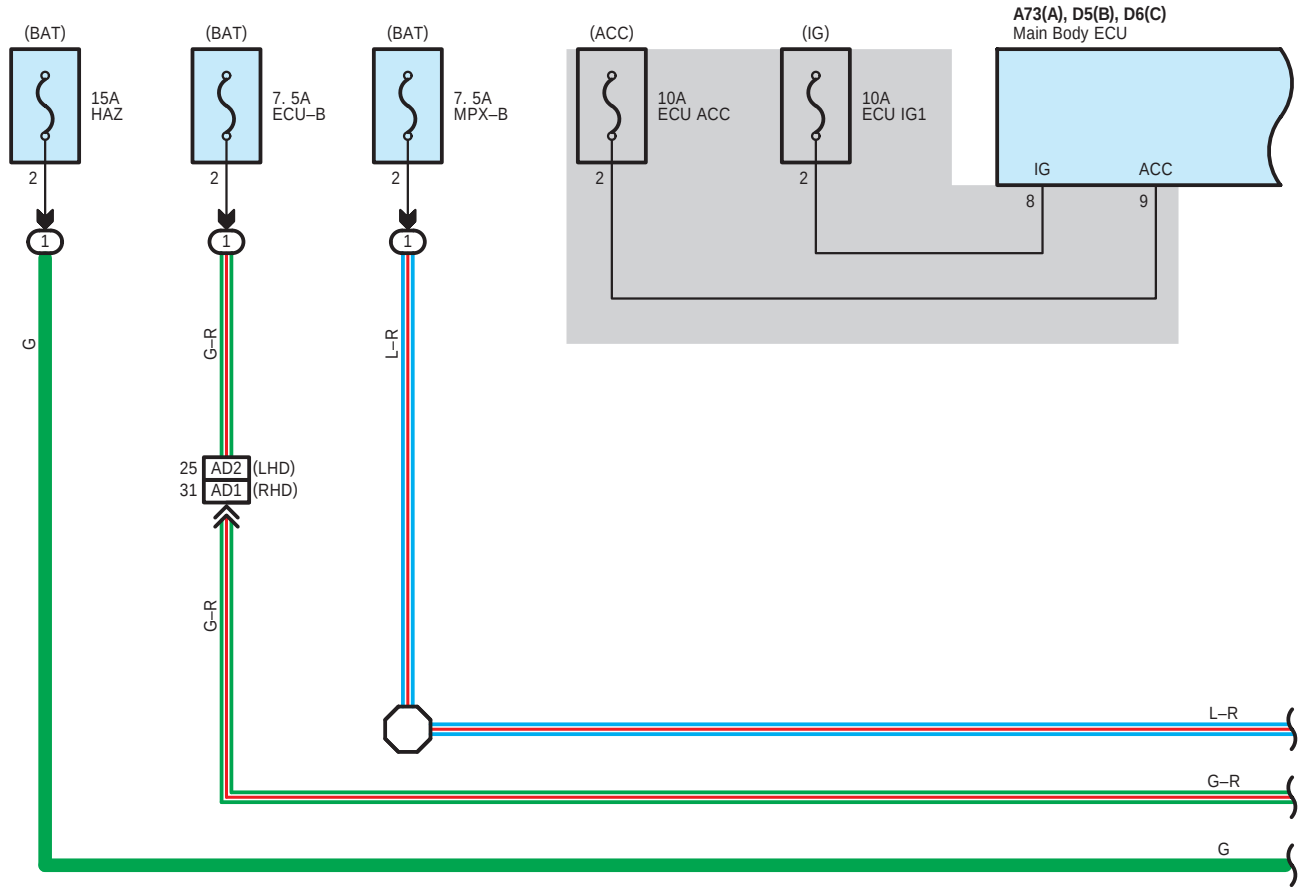

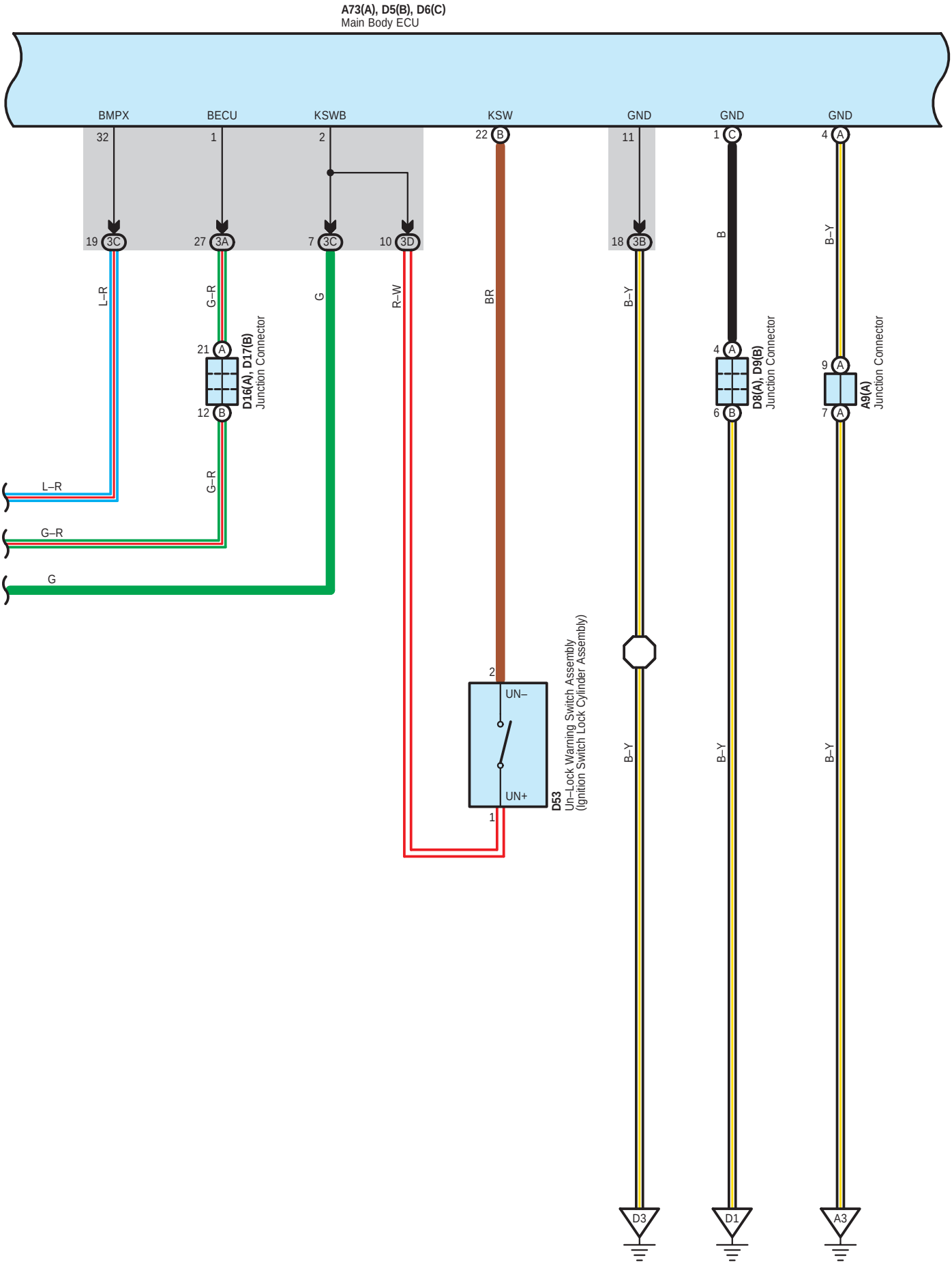
A73(A), D5(B), D6(C)
Main Body ECU
BMPX
BECU
KSWB
KSW
GND
GND
GND
32
1
2
22 B
11
1 C
4 A
19 3C
27 3A
7 3C
10 3D
18 3B
L–R
G–R
G
R–W
BR
B–Y
B
B–Y
21 A
12 B
D16(A), D17(B)
Junction Connector
4 A
6 B
D8(A), D9(B)
Junction Connector
9 A
7 A
A9(A)
Junction Connector
L–R
G–R
G
2
UN–
UN+
1
D53
Un–Lock Warning Switch Assembly
(Ignition Switch Lock Cylinder Assembly)
B–Y
B–Y
B–Y
D3
D1
A3

Wireless Door Lock Control (w/o Entry & Start System)

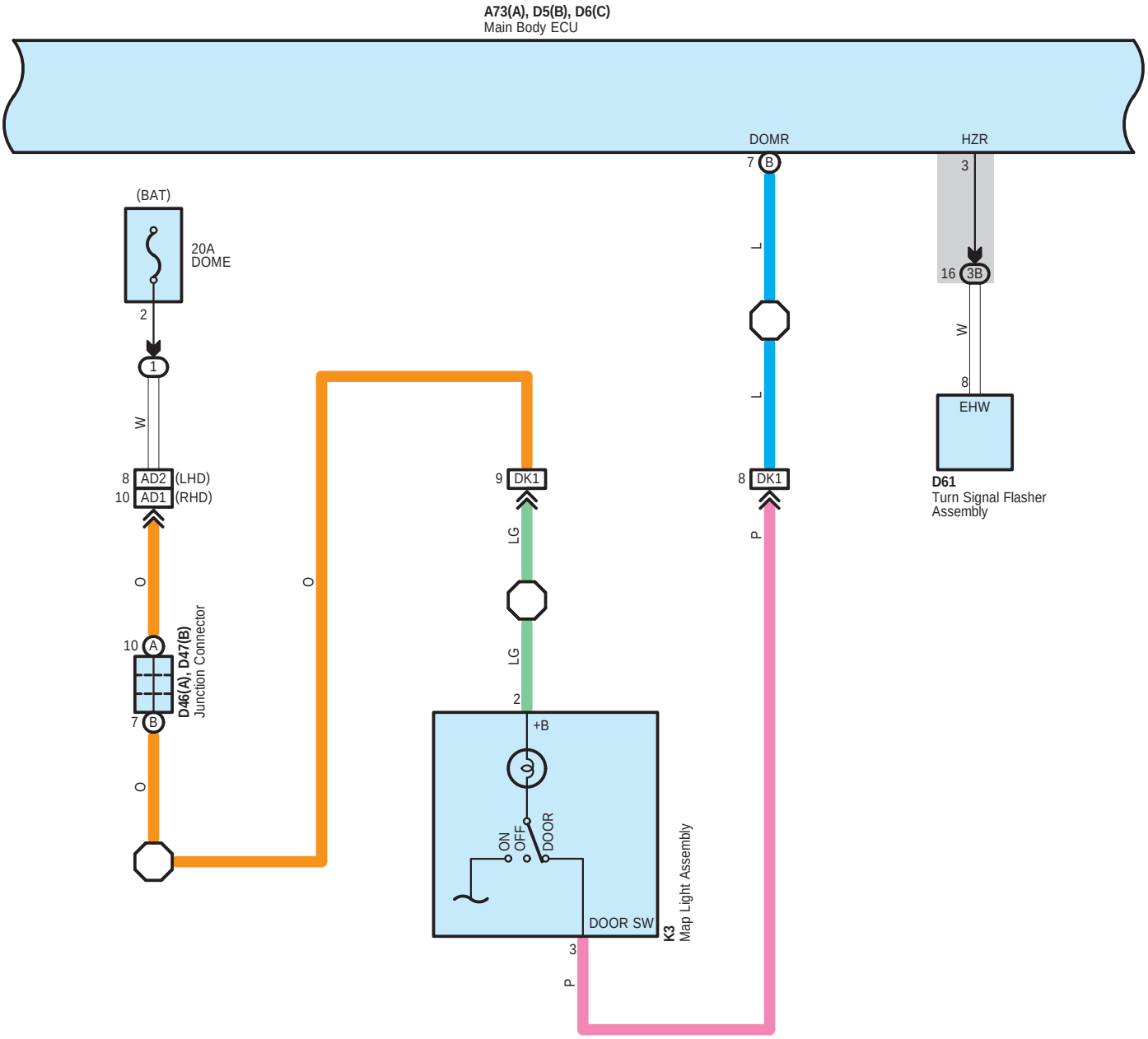

＊9 : w/ Wireless Door Lock Buzzer

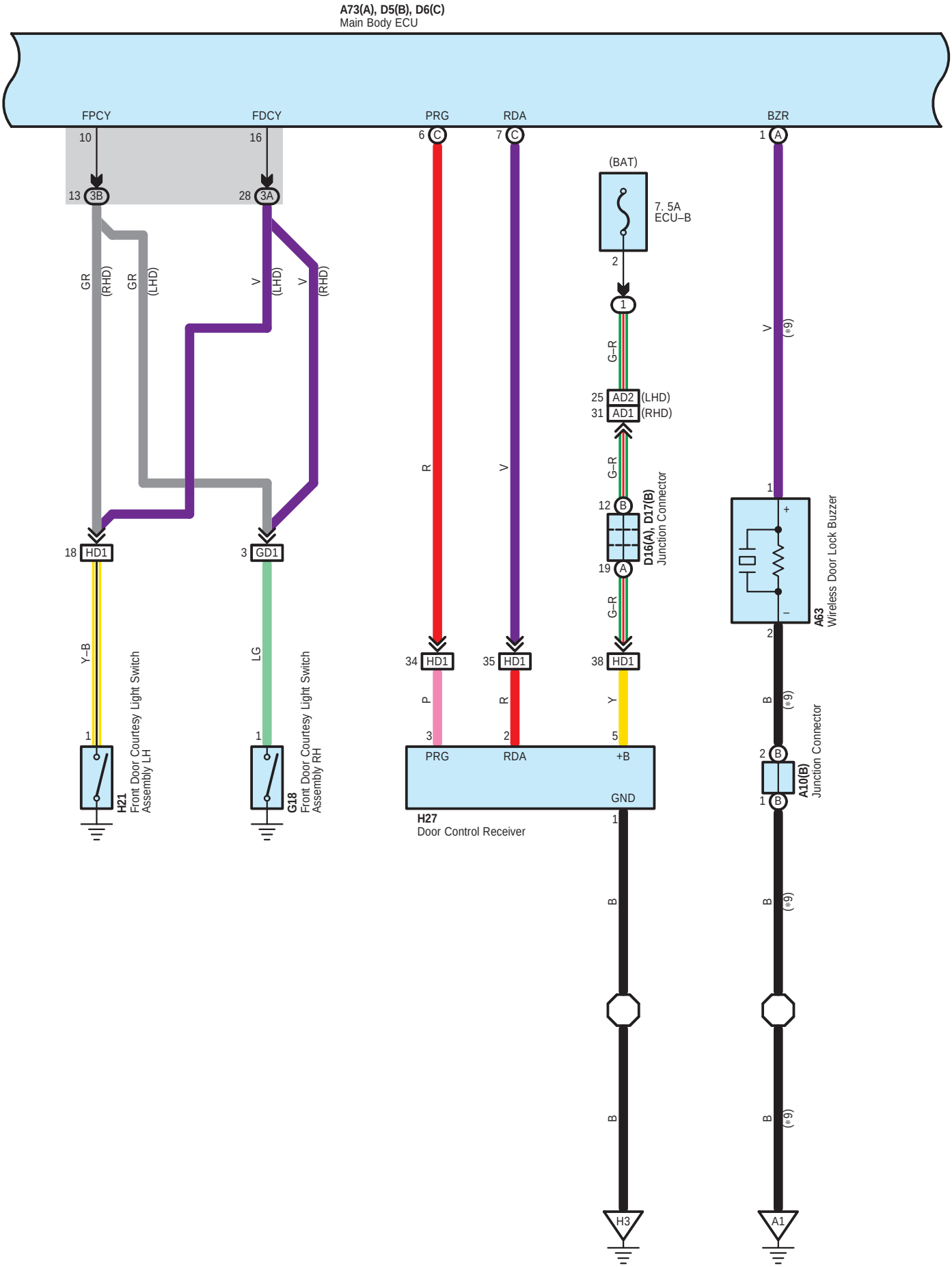
A73(A), D5(B), D6(C)
Main Body ECU
FPCY
FDCY
PRG
RDA
BZR
10
16
6 C
7 C
1 A
13 3B
28 3A
(BAT)
7. 5A
ECU–B
2
1
GR (RHD)
GR (LHD)
V (LHD)
V (RHD)
G–R
V (*9)
25 AD2 (LHD)
31 AD1 (RHD)
R
V
G–R
12 B
19 A
D16(A), D17(B)
Junction Connector
1
+
–
2
A63
Wireless Door Lock Buzzer
18 HD1
3 GD1
34 HD1
35 HD1
38 HD1
Y–B
LG
P
R
Y
B (*9)
1
3
2
5
PRG
RDA
+B
GND
H21
Front Door Courtesy Light Switch
Assembly LH
G18
Front Door Courtesy Light Switch
Assembly RH
H27
Door Control Receiver
2 B
1 B
A10(B)
Junction Connector
B
B (*9)
H3
A1

Wireless Door Lock Control (w/o Entry & Start System)

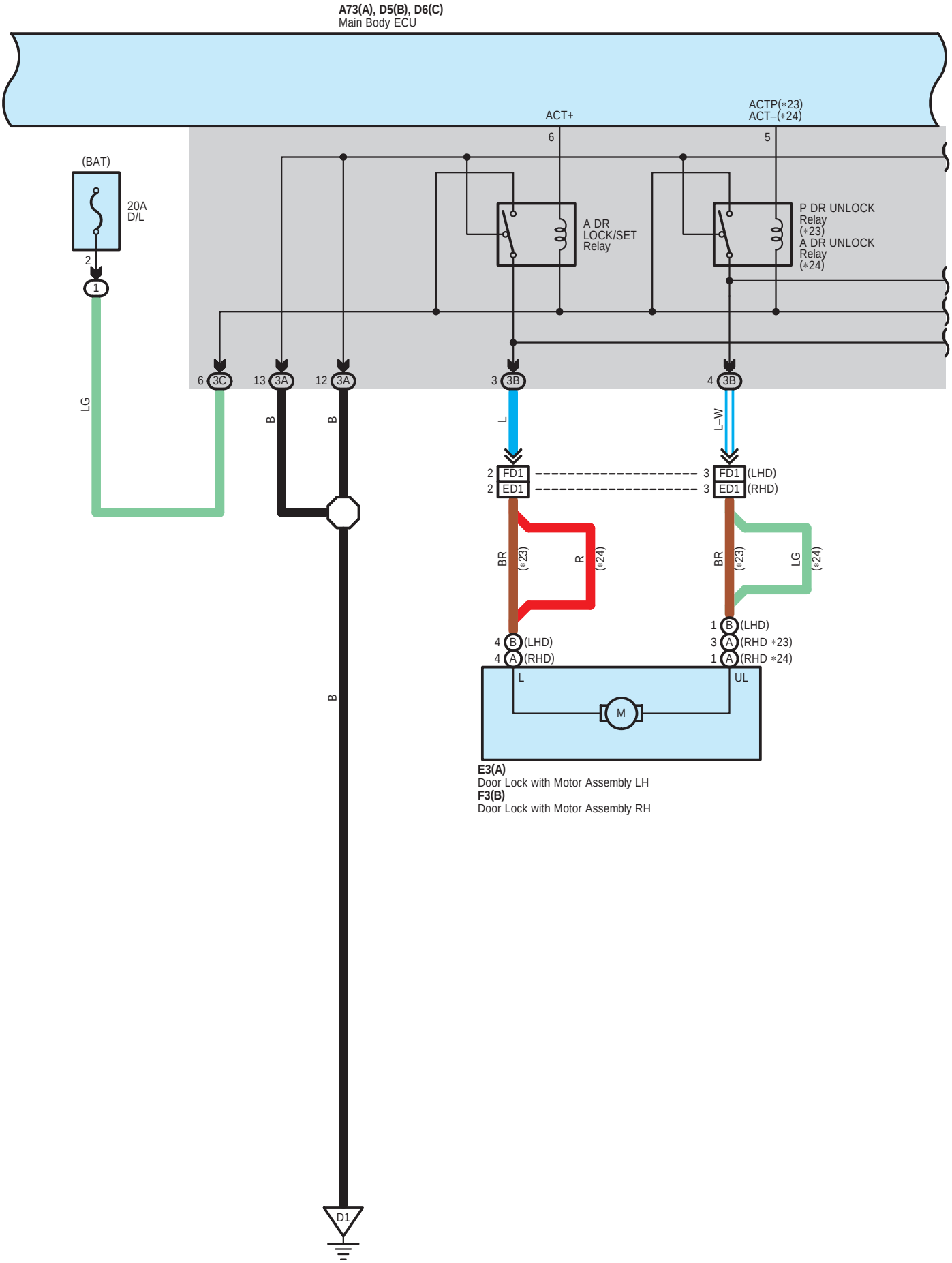

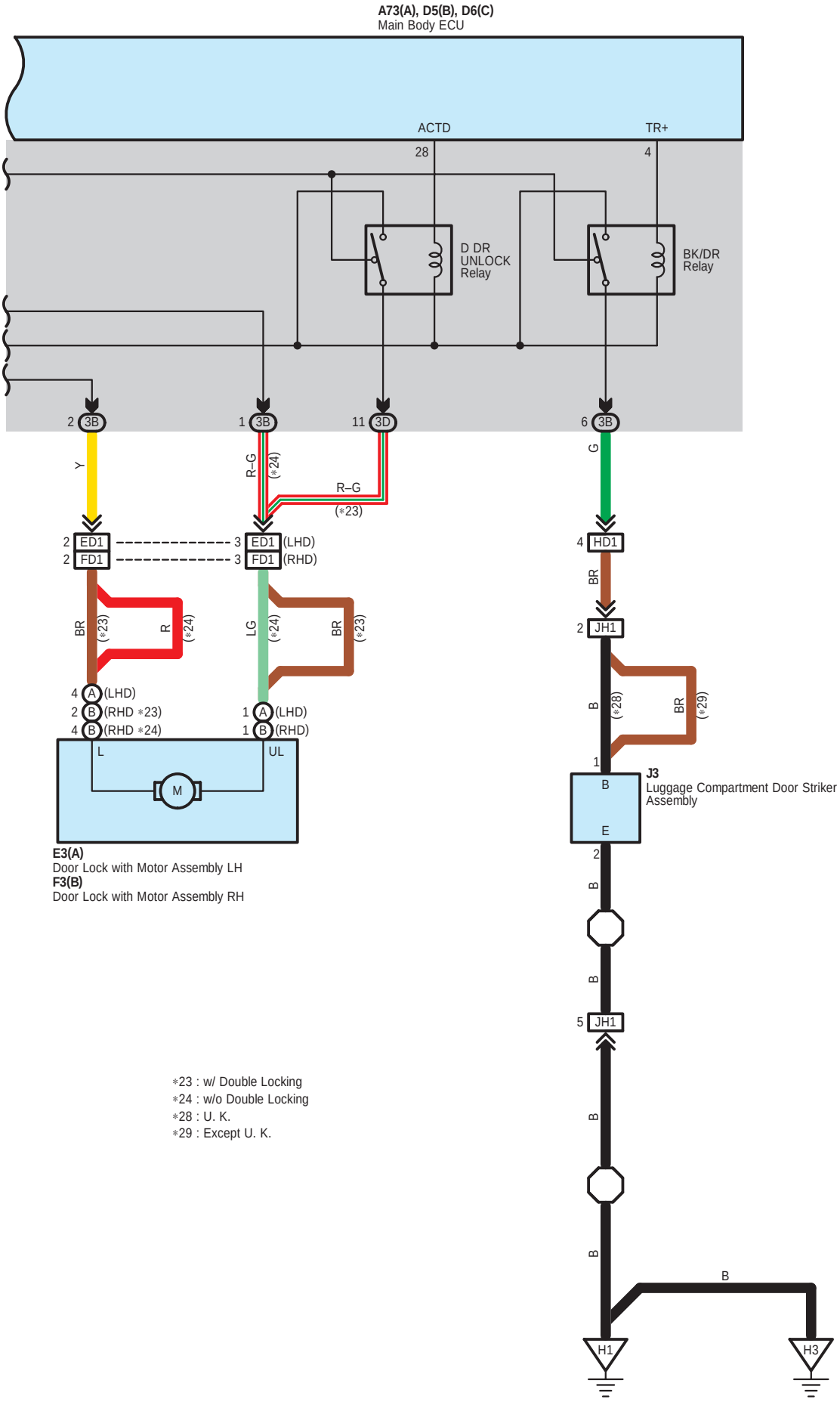

*23 : w/ Double Locking
*24 : w/o Double Locking
*28 : U. K.
*29 : Except U. K.

Wireless Door Lock Control (w/o Entry & Start System)

○ : **Parts Location**

Code		See Page	Code		See Page	Code		See Page
A9	A	42 (LHD)	D9	B	40 (LHD)	E3	A	44 (LHD)
		50 (RHD)			48 (RHD)			52 (RHD)
A10	B	42 (LHD)	D16	A	40 (LHD)	F3	B	44 (LHD)
		50 (RHD)			48 (RHD)			52 (RHD)
A63		39 (LHD)	D17	B	40 (LHD)	G18		44 (LHD)
		47 (RHD)			48 (RHD)			52 (RHD)
A73	A	42 (LHD)	D46	A	41 (LHD)	H21		45 (LHD)
		50 (RHD)			49 (RHD)			53 (RHD)
D5	B	40 (LHD)	D47	B	41 (LHD)	H27		45 (LHD)
		48 (RHD)			49 (RHD)			53 (RHD)
D6	C	40 (LHD)	D53		41 (LHD)	J3		45 (LHD)
		48 (RHD)			49 (RHD)			53 (RHD)
D8	A	40 (LHD)	D61		41 (LHD)	K3		45 (LHD)
		48 (RHD)			49 (RHD)			53 (RHD)

: **Relay Blocks**

Code	See Page	Relay Blocks (Relay Block Location)
1	24	Engine Room R/B (Engine Compartment Right)

: **Junction Block and Wire Harness Connector**

Code	See Page	Junction Block and Wire Harness (Connector Location)
3A	26	Instrument Panel Wire and Instrument Panel J/B Assembly (Instrument Panel Reinforcement)
3B		
3C	26	Engine Room Main Wire and Instrument Panel J/B Assembly (Instrument Panel Reinforcement)
3D	26	Instrument Panel Wire and Instrument Panel J/B Assembly (Instrument Panel Reinforcement)

: **Connector Joining Wire Harness and Wire Harness**

Code	See Page	Joining Wire Harness and Wire Harness (Connector Location)
AD1	55 (LHD)	Engine Room Main Wire and Instrument Panel Wire (Cowl Side Panel RH)
	59 (RHD)	
AD2	55 (LHD)	Engine Room Main Wire and Instrument Panel Wire (Instrument Panel Reinforcement)
	59 (RHD)	
DK1	55 (LHD)	Instrument Panel Wire and Roof Wire (Front Body Inner Pillar RH)
	59 (RHD)	
ED1	55 (LHD)	Front Door Wire LH and Instrument Panel Wire (Cowl Side Panel LH)
	59 (RHD)	
FD1	55 (LHD)	Front Door Wire RH and Instrument Panel Wire (Cowl Side Panel RH)
	59 (RHD)	
GD1	55 (LHD)	No. 1 Floor Wire and Instrument Panel Wire (Cowl Side Panel RH)
	59 (RHD)	
HD1	55 (LHD)	No. 2 Floor Wire and Instrument Panel Wire (Cowl Side Panel LH)
	59 (RHD)	
JH1	56 (LHD)	Luggage Room Wire and No. 2 Floor Wire (Quarter Panel LH)
	60 (RHD)	

▽ : **Ground Points**

Code	See Page	Ground Points Location
A1	54 (LHD)	Front Fender Apron LH
	58 (RHD)	
A3	55 (LHD)	Cowl Side Panel RH
	59 (RHD)	Cowl Side Panel LH
D1	55 (LHD)	
	59 (RHD)	Cowl Side Panel RH
D3	55 (LHD)	Instrument Panel Brace RH
	59 (RHD)	Instrument Panel Brace LH
H1	56 (LHD)	Lower Back Panel

▽ : **Ground Points**

Code	See Page	Ground Points Location
H1	60 (RHD)	Lower Back Panel
H3	56 (LHD)	Quarter Wheel House Panel LH
	60 (RHD)	

Luggage Compartment Door Opener

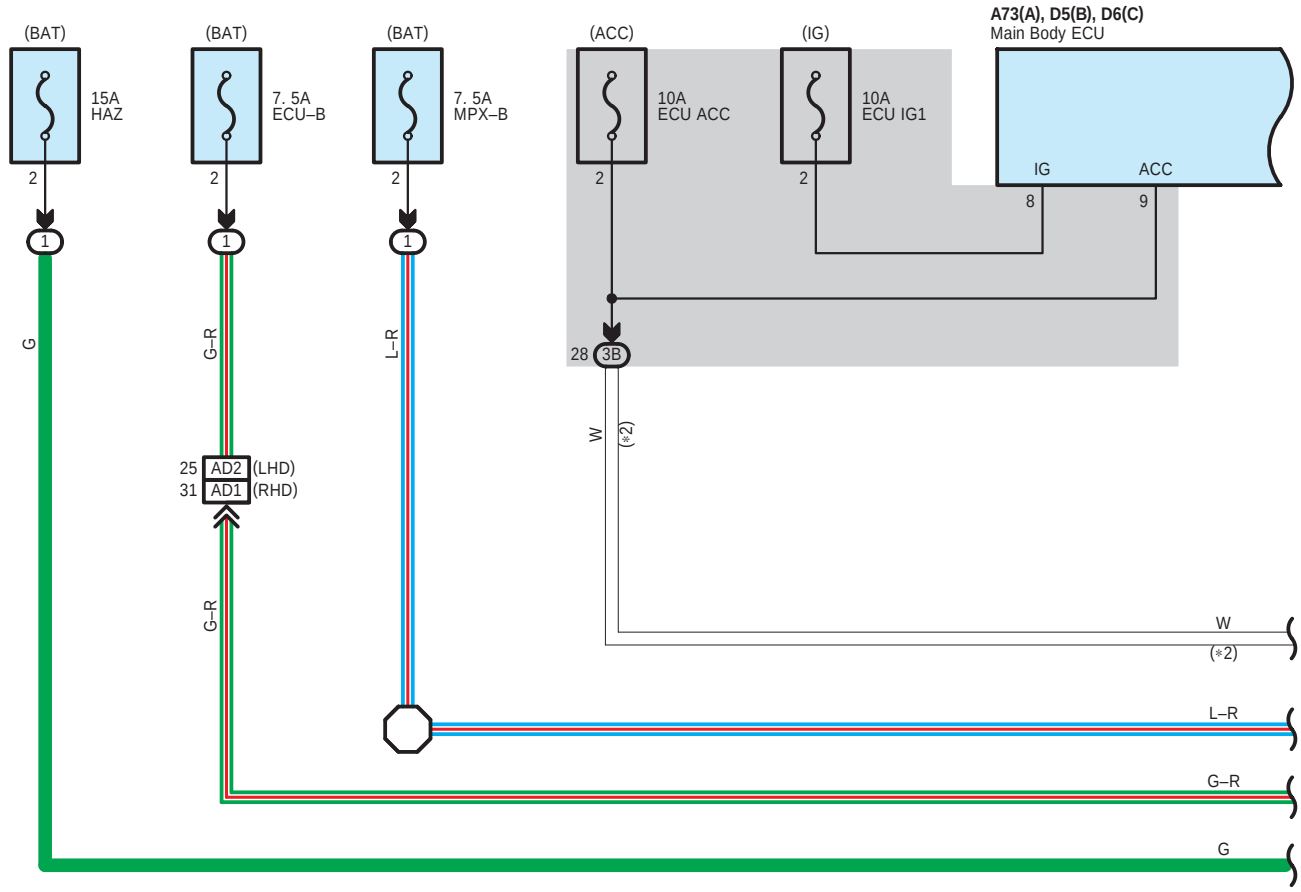

* 2 : w/ Entry & Start System

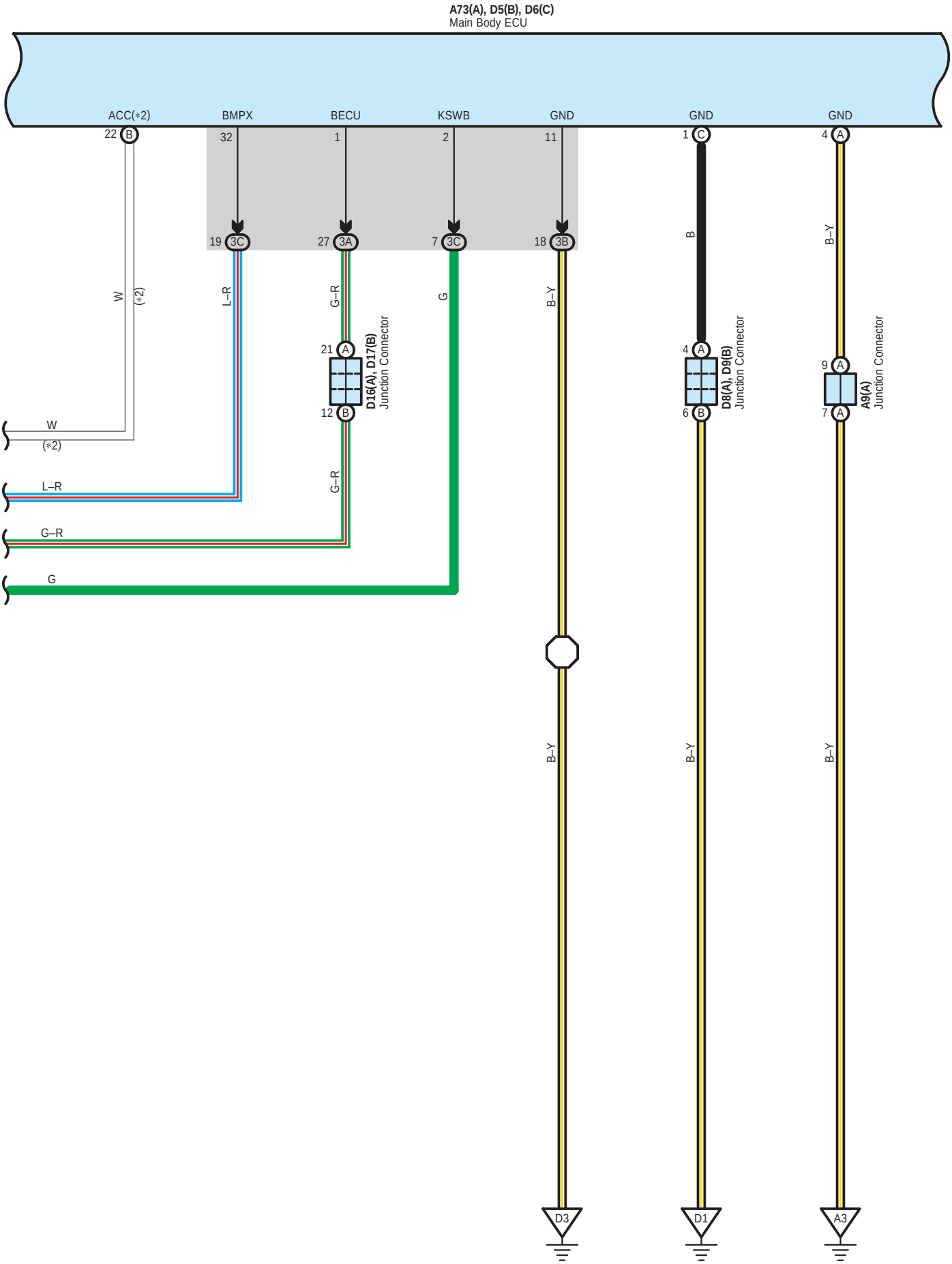
A73(A), D5(B), D6(C)
Main Body ECU
ACC(*2)
BMPX
BECU
KSWB
GND
GND
GND
22 B
32
1
2
11
1 C
4 A
19 3C
27 3A
7 3C
18 3B
W
(*2)
L–R
G–R
G
B–Y
B
B–Y
21 A
12 B
D16(A), D17(B)
Junction Connector
4 A
6 B
D8(A), D9(B)
Junction Connector
9 A
7 A
A9(A)
Junction Connector
W
(*2)
L–R
G–R
G
D3
D1
A3

Luggage Compartment Door Opener

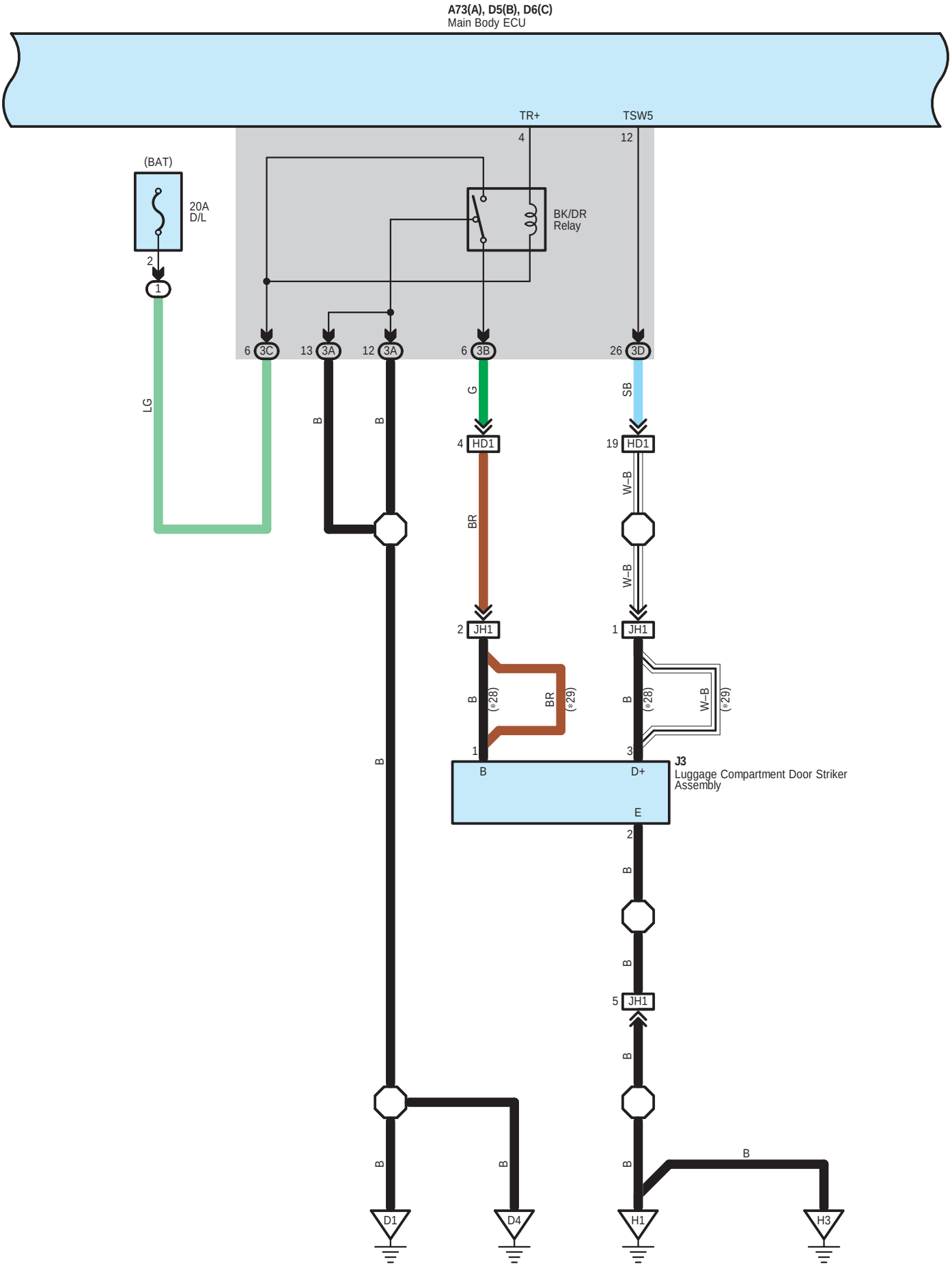

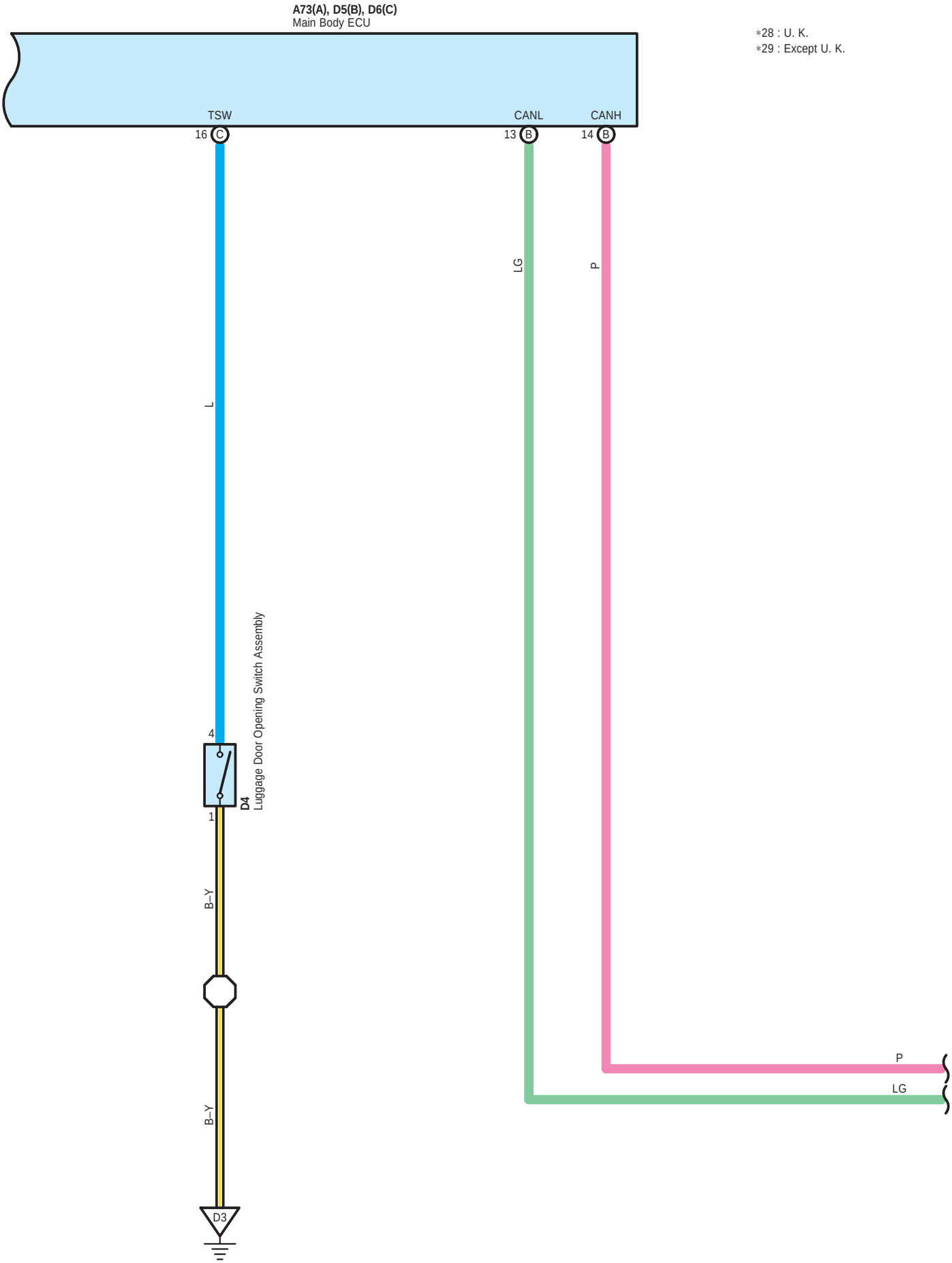
A73(A), D5(B), D6(C)
Main Body ECU
*28 : U. K.
*29 : Except U. K.
TSW
16 C
CANL
13 B
CANH
14 B
LG
P
L
4
1
D4
Luggage Door Opening Switch Assembly
B–Y
B–Y
D3
P
LG

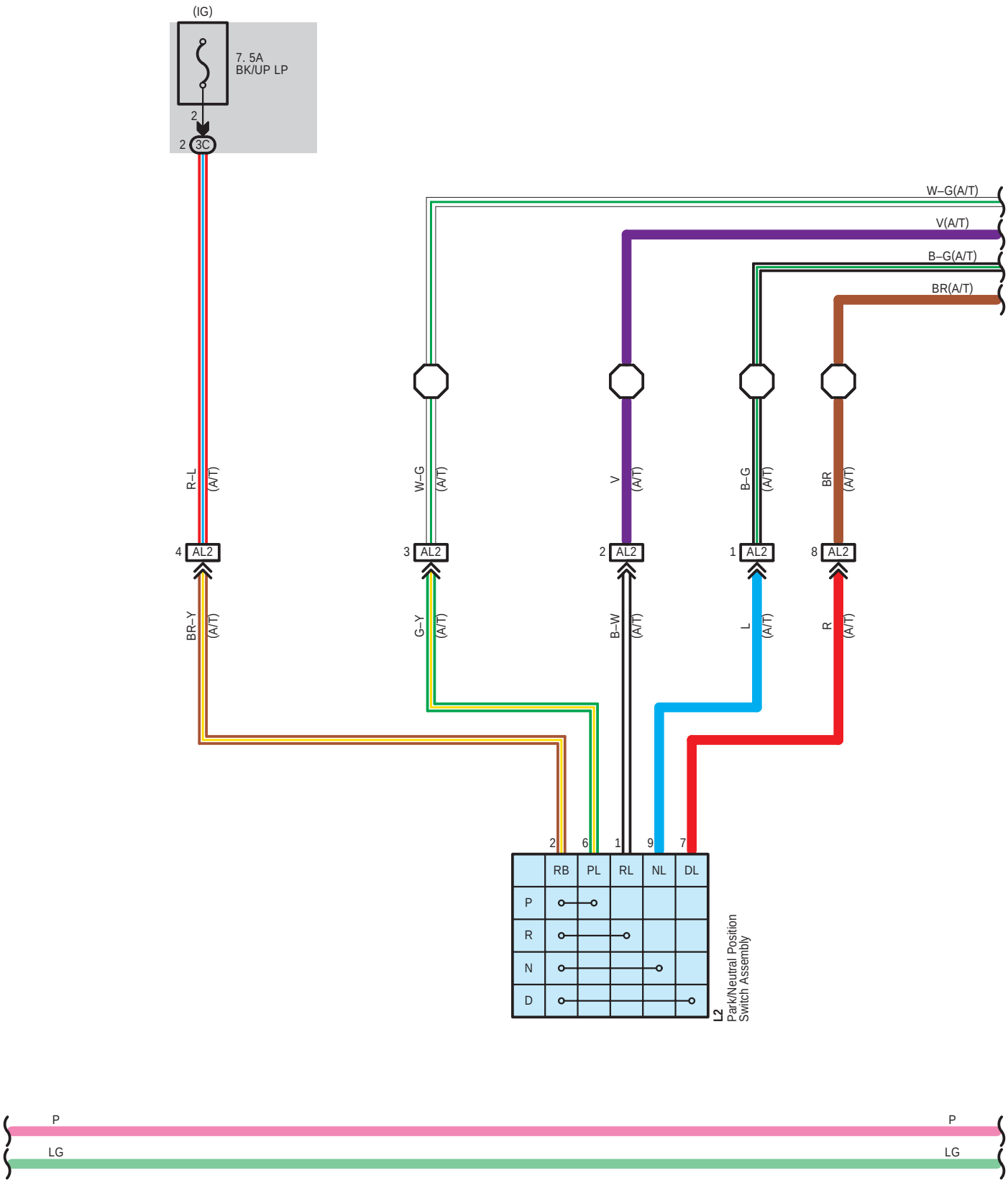
(IG)
7. 5A
BK/UP LP
2
2 3C
W–G(A/T)
V(A/T)
B–G(A/T)
BR(A/T)
R–L (A/T)
W–G (A/T)
V (A/T)
B–G (A/T)
BR (A/T)
4 AL2
3 AL2
2 AL2
1 AL2
8 AL2
BR–Y (A/T)
G–Y (A/T)
B–W (A/T)
L (A/T)
R (A/T)
2 6 1 9 7
RB PL RL NL DL
P
R
N
D
L2
Park/Neutral Position
Switch Assembly
P
LG
P
LG

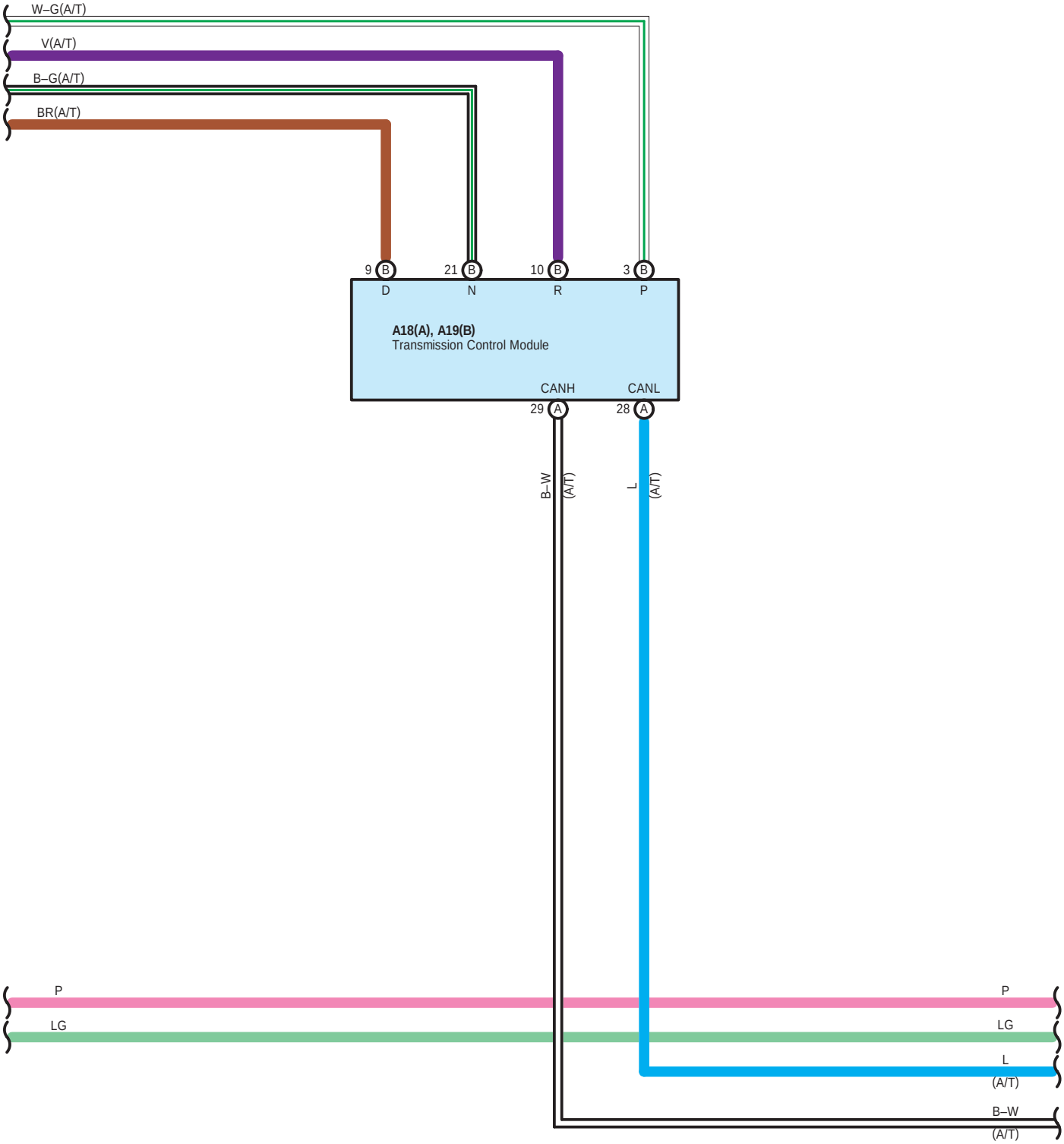
W–G(A/T)
V(A/T)
B–G(A/T)
BR(A/T)
9 B
D
21 B
N
10 B
R
3 B
P
A18(A), A19(B)
Transmission Control Module
CANH
CANL
29 A
28 A
B–W
(A/T)
L
(A/T)
P
LG
P
LG
L
(A/T)
B–W
(A/T)

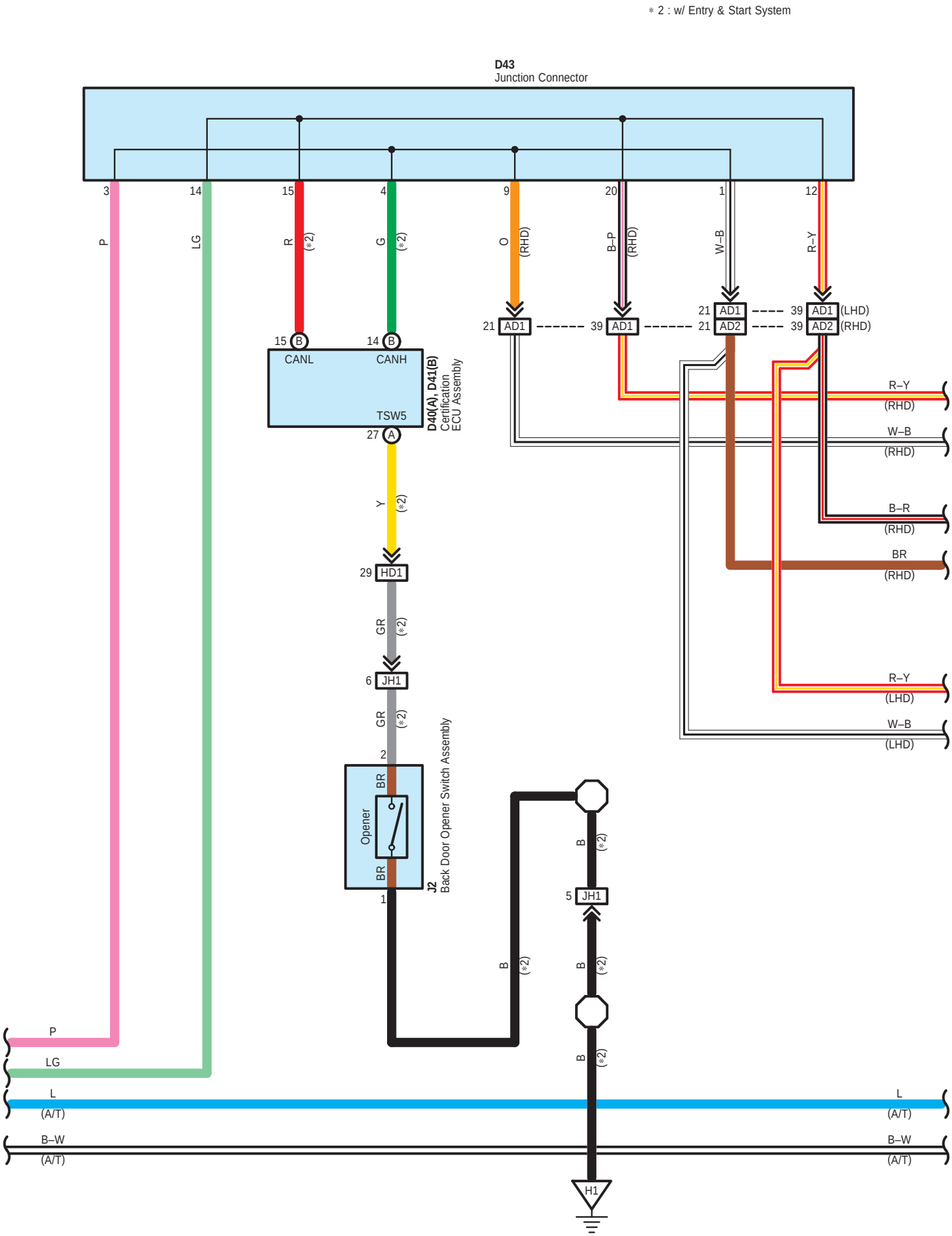
* 2 : w/ Entry & Start System
D43
Junction Connector
3
14
15
4
9
20
1
12
P
LG
R
(*2)
G
(*2)
O
(RHD)
B–P
(RHD)
W–B
R–Y
21 AD1
39 AD1
21 AD1
21 AD2
39 AD1 (LHD)
39 AD2 (RHD)
15 B
14 B
CANL
CANH
TSW5
27 A
D40(A), D41(B)
Certification
ECU Assembly
R–Y
(RHD)
W–B
(RHD)
B–R
(RHD)
BR
(RHD)
Y
(*2)
29 HD1
GR
(*2)
6 JH1
GR
(*2)
2
BR
Opener
BR
1
J2
Back Door Opener Switch Assembly
R–Y
(LHD)
W–B
(LHD)
B
(*2)
5 JH1
B
(*2)
B
(*2)
B
(*2)
P
LG
L
(A/T)
B–W
(A/T)
L
(A/T)
B–W
(A/T)
H1

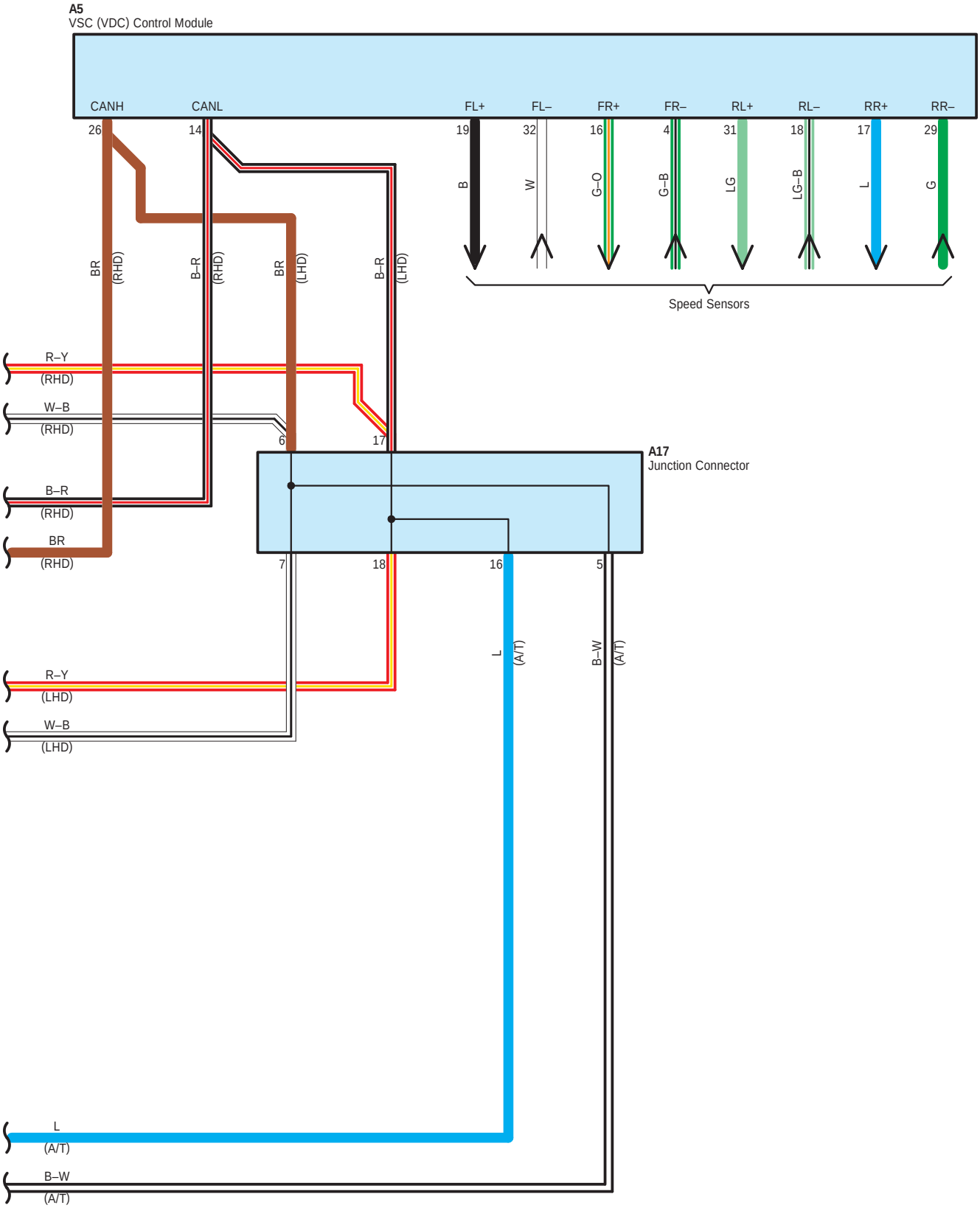
A5
VSC (VDC) Control Module
CANH
CANL
FL+
FL–
FR+
FR–
RL+
RL–
RR+
RR–
26
14
19
32
16
4
31
18
17
29
B
W
G–O
G–B
LG
LG–B
L
G
Speed Sensors
BR (RHD)
B–R (RHD)
BR (LHD)
B–R (LHD)
R–Y (RHD)
W–B (RHD)
B–R (RHD)
BR (RHD)
6
17
A17
Junction Connector
7
18
16
5
L (A/T)
B–W (A/T)
R–Y (LHD)
W–B (LHD)
L (A/T)
B–W (A/T)

Luggage Compartment Door Opener

: Parts Location

Code		See Page	Code		See Page	Code		See Page
A5		39 (LHD)	D4		48 (RHD)	D40	A	41 (LHD)
		47 (RHD)	D5	B	40 (LHD)			49 (RHD)
A9	A	42 (LHD)			48 (RHD)	D41	B	41 (LHD)
		50 (RHD)	D6	C	40 (LHD)			49 (RHD)
A17		42 (LHD)			48 (RHD)	D43		41 (LHD)
		50 (RHD)	D8	A	40 (LHD)			49 (RHD)
A18	A	42 (LHD)			48 (RHD)	J2		45 (LHD)
		50 (RHD)	D9	B	40 (LHD)			53 (RHD)
A19	B	42 (LHD)			48 (RHD)	J3		45 (LHD)
		50 (RHD)	D16	A	40 (LHD)			53 (RHD)
A73	A	42 (LHD)			48 (RHD)	L2		39 (LHD)
		50 (RHD)	D17	B	40 (LHD)			47 (RHD)
D4		40 (LHD)			48 (RHD)			

: Relay Blocks

Code	See Page	Relay Blocks (Relay Block Location)
1	24	Engine Room R/B (Engine Compartment Right)

: Junction Block and Wire Harness Connector

Code	See Page	Junction Block and Wire Harness (Connector Location)
3A	26	Instrument Panel Wire and Instrument Panel J/B Assembly (Instrument Panel Reinforcement)
3B		
3C	26	Engine Room Main Wire and Instrument Panel J/B Assembly (Instrument Panel Reinforcement)
3D	26	Instrument Panel Wire and Instrument Panel J/B Assembly (Instrument Panel Reinforcement)

: Connector Joining Wire Harness and Wire Harness

Code	See Page	Joining Wire Harness and Wire Harness (Connector Location)
AD1	55 (LHD)	Engine Room Main Wire and Instrument Panel Wire (Cowl Side Panel RH)
	59 (RHD)	
AD2	55 (LHD)	Engine Room Main Wire and Instrument Panel Wire (Instrument Panel Reinforcement)
	59 (RHD)	
AL2	54 (LHD)	Engine Room Main Wire and Transmission Wire (Dash Panel)
	58 (RHD)	
HD1	55 (LHD)	No. 2 Floor Wire and Instrument Panel Wire (Cowl Side Panel LH)
	59 (RHD)	
JH1	56 (LHD)	Luggage Room Wire and No. 2 Floor Wire (Quarter Panel LH)
	60 (RHD)	

: Ground Points

Code	See Page	Ground Points Location
A3	55 (LHD)	Cowl Side Panel RH
	59 (RHD)	Cowl Side Panel LH
D1	55 (LHD)	
	59 (RHD)	Cowl Side Panel RH
D3	55 (LHD)	Instrument Panel Brace RH
	59 (RHD)	Instrument Panel Brace LH
D4	55 (LHD)	Cowl Side Panel RH
	59 (RHD)	Cowl Side Panel LH
H1	56 (LHD)	Lower Back Panel
	60 (RHD)	
H3	56 (LHD)	Quarter Wheel House Panel LH
	60 (RHD)	

Double Locking

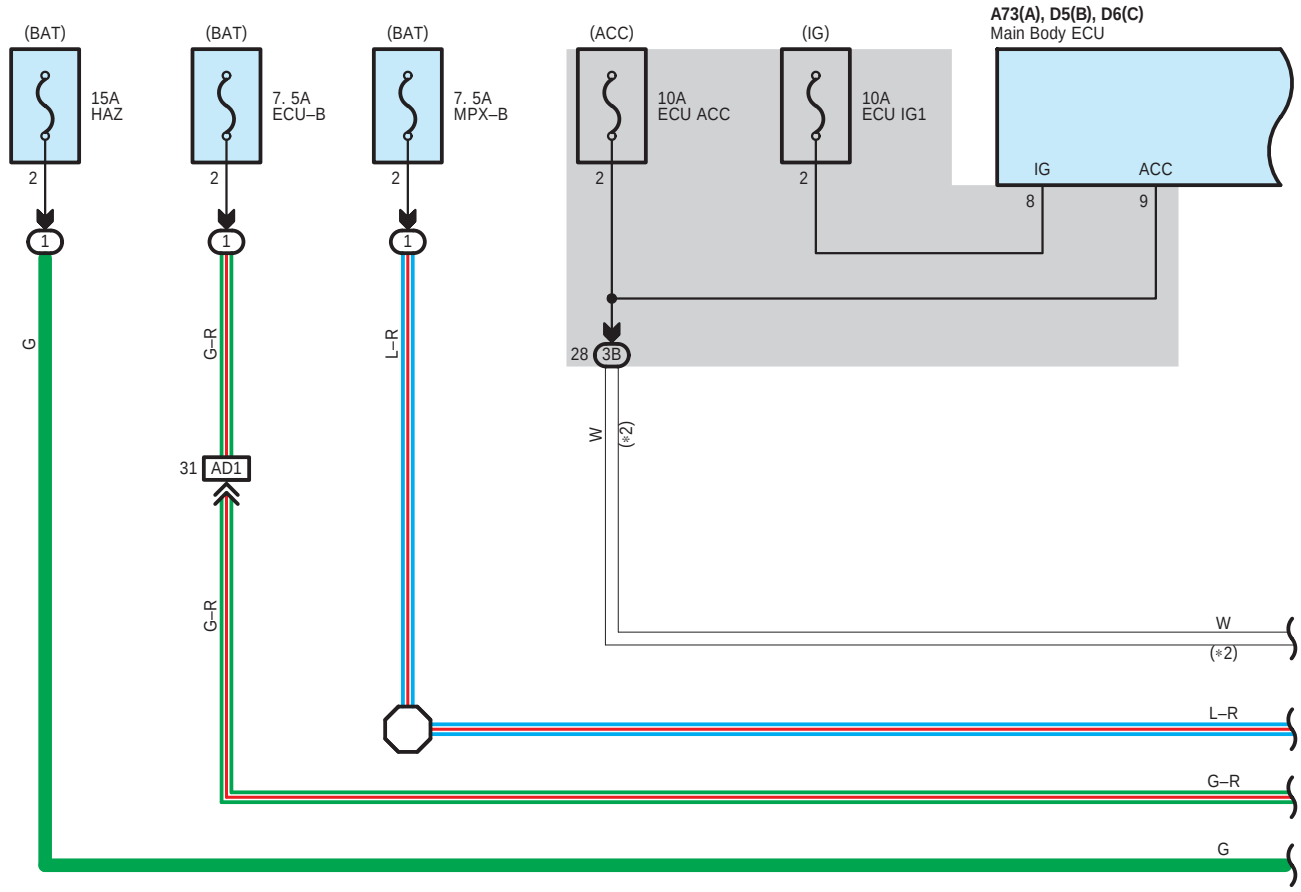

* 2 : w/ Entry & Start System

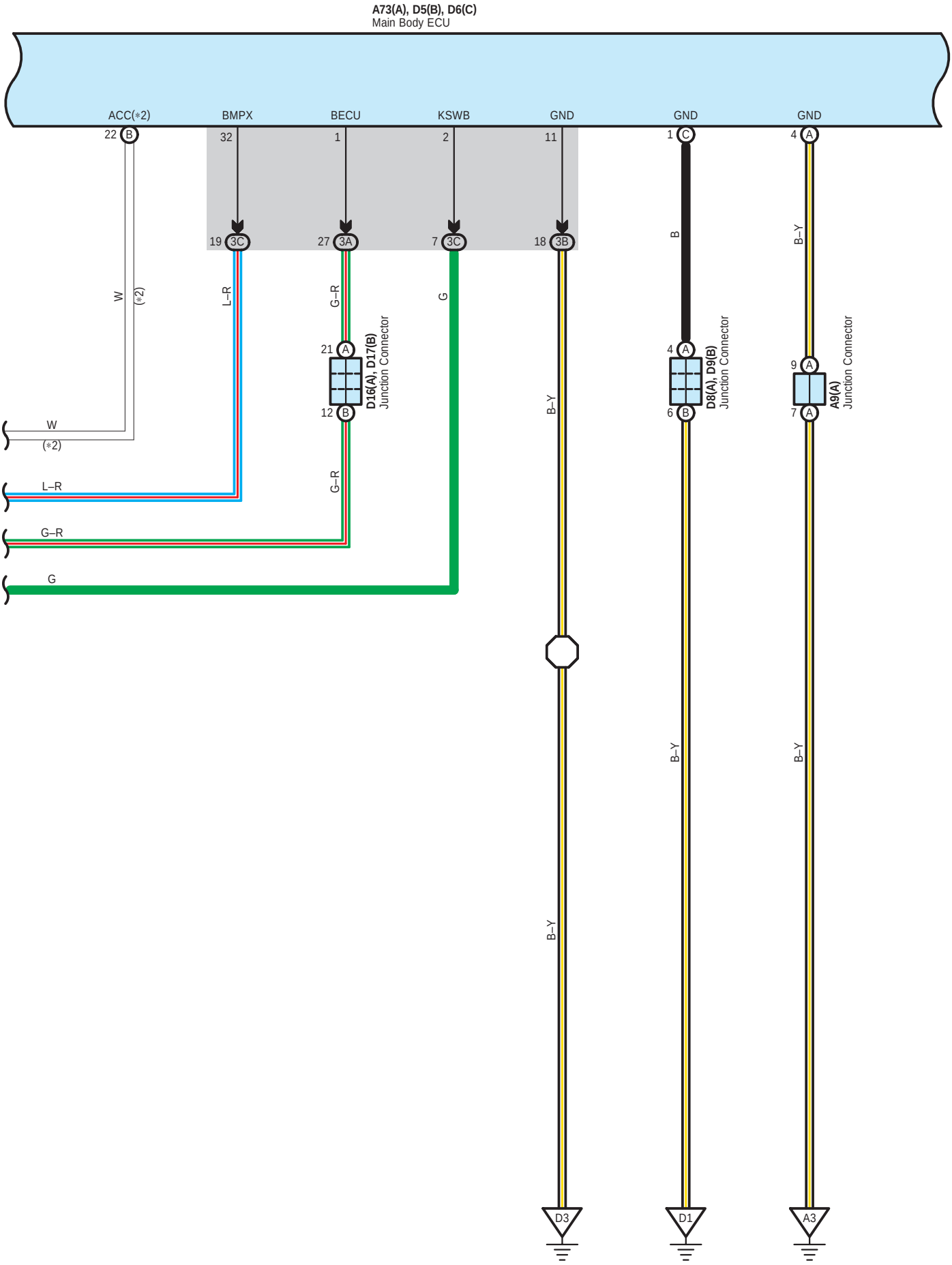
A73(A), D5(B), D6(C)
Main Body ECU
ACC(*2)
BMPX
BECU
KSWB
GND
GND
GND
22 B
32
1
2
11
1 C
4 A
19 3C
27 3A
7 3C
18 3B
W
(*2)
L–R
G–R
G
B
B–Y
21 A
12 B
D16(A), D17(B)
Junction Connector
4 A
6 B
D8(A), D9(B)
Junction Connector
9 A
7 A
A9(A)
Junction Connector
W
(*2)
L–R
G–R
G
D3
D1
A3

Double Locking

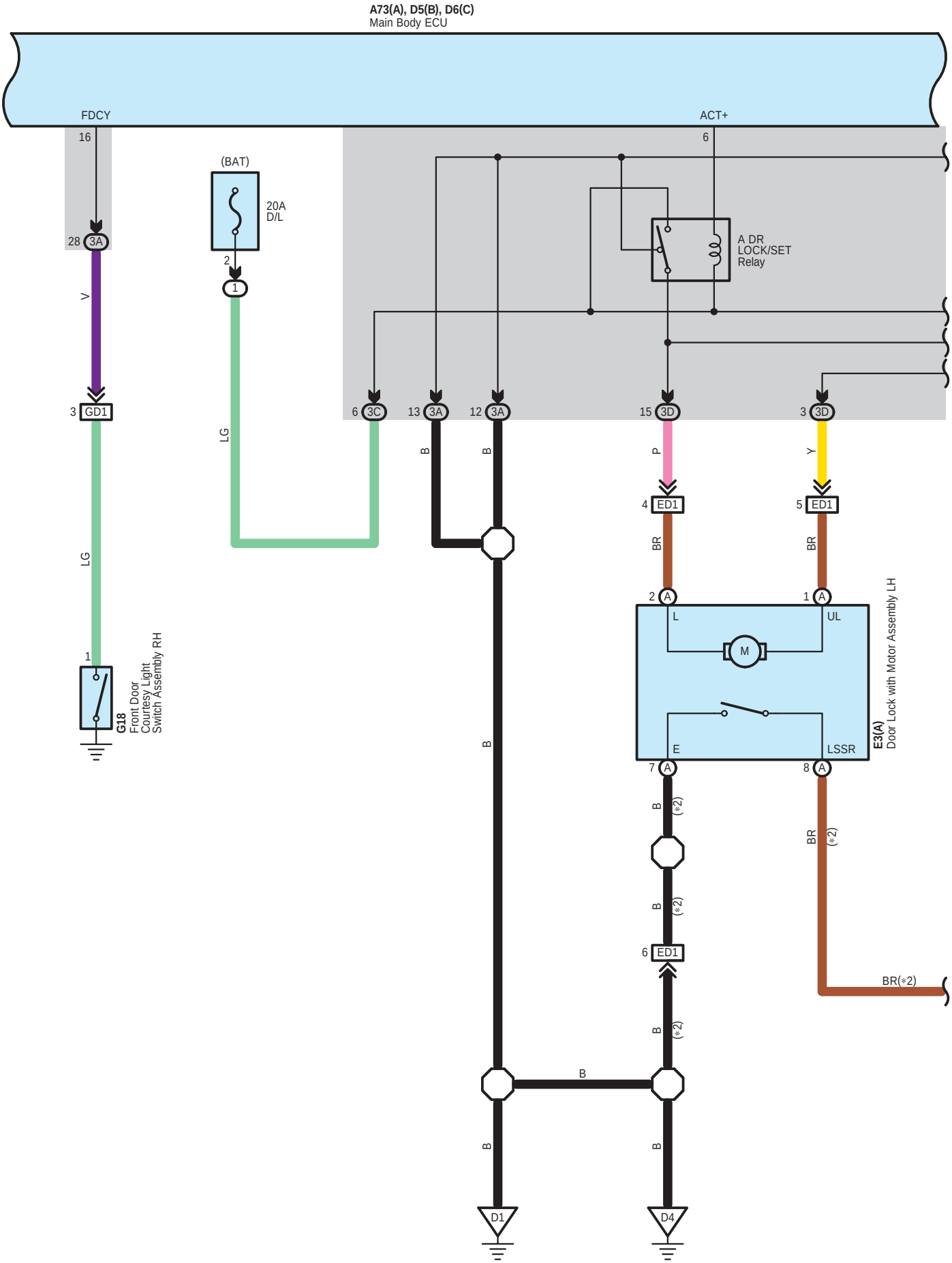

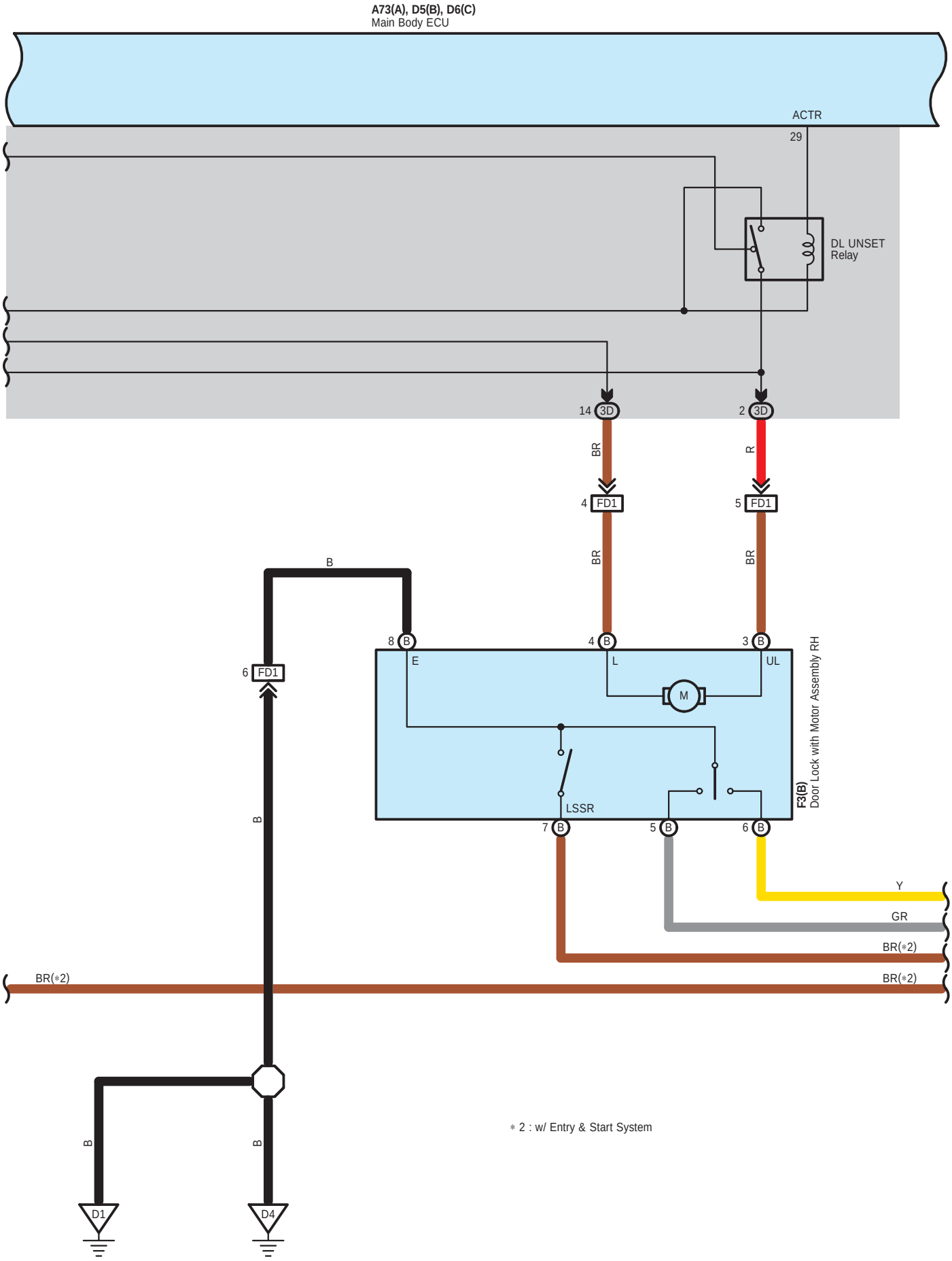
A73(A), D5(B), D6(C)
Main Body ECU
ACTR
29
DL UNSET
Relay
14 3D
2 3D
BR
R
4 FD1
5 FD1
BR
BR
B
8 B
4 B
3 B
E
L
UL
M
6 FD1
LSSR
7 B
5 B
6 B
F3(B)
Door Lock with Motor Assembly RH
B
Y
GR
BR(*2)
BR(*2)
BR(*2)
B
B
D1
D4
* 2 : w/ Entry & Start System

Double Locking

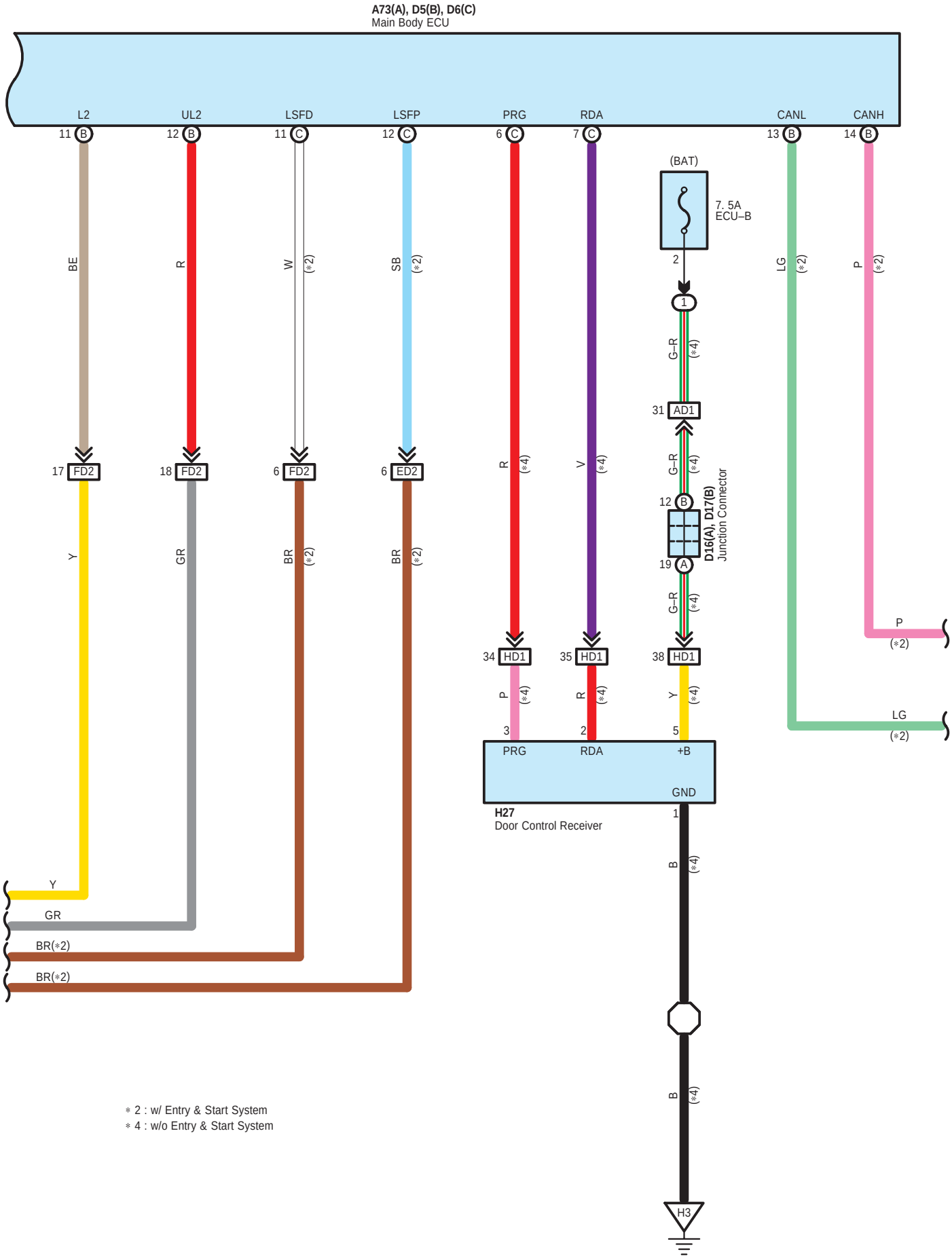

∗ 2 : w/ Entry & Start System
∗ 4 : w/o Entry & Start System

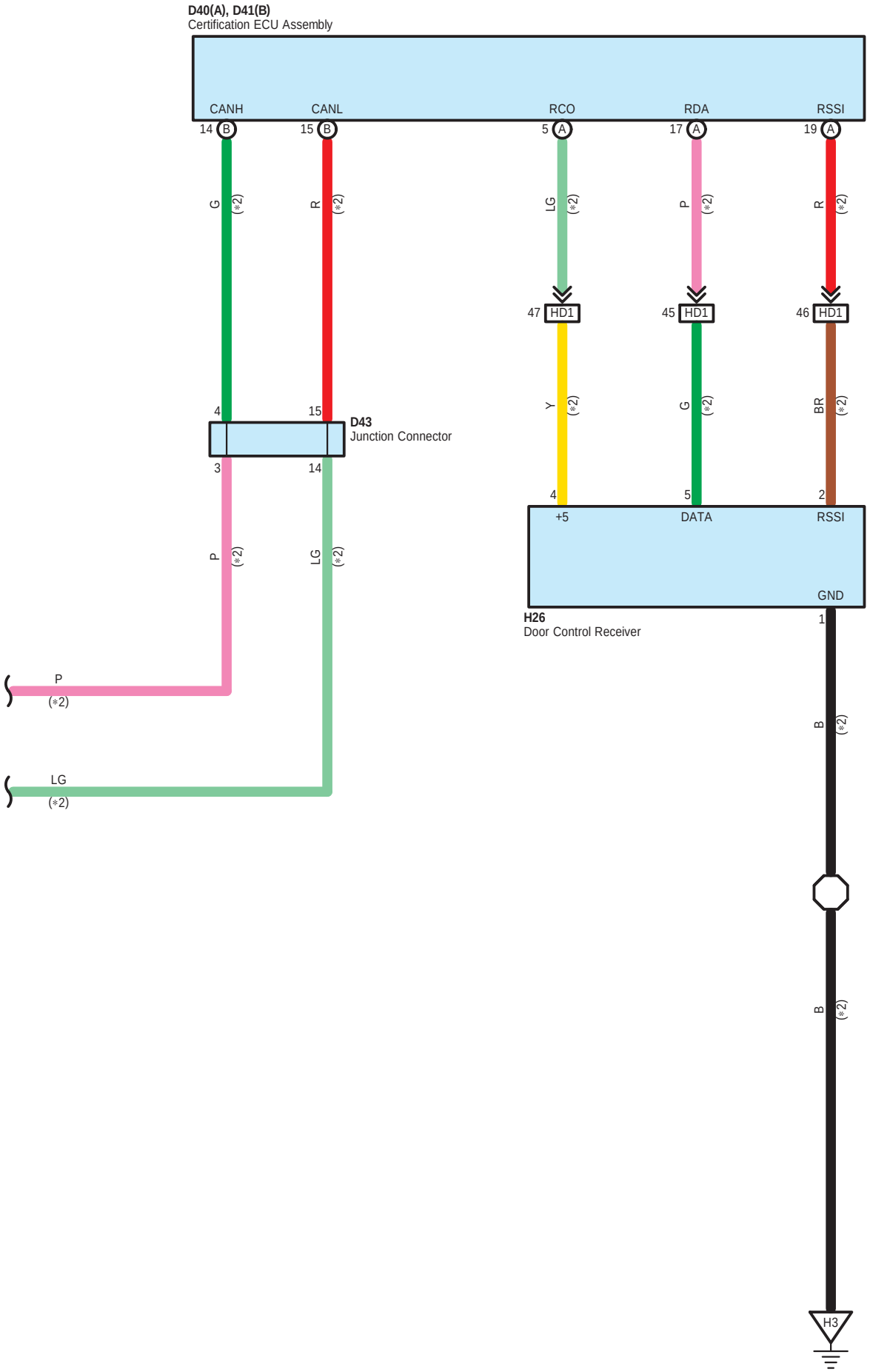
D40(A), D41(B)
Certification ECU Assembly
CANH
CANL
RCO
RDA
RSSI
14 B
15 B
5 A
17 A
19 A
G (*2)
R (*2)
LG (*2)
P (*2)
R (*2)
47 HD1
45 HD1
46 HD1
Y (*2)
G (*2)
BR (*2)
4
15
D43
Junction Connector
3
14
4
5
2
+5
DATA
RSSI
GND
H26
Door Control Receiver
1
P (*2)
LG (*2)
P (*2)
LG (*2)
B (*2)
B (*2)
H3

Double Locking

○ : **Parts Location**

Code		See Page	Code		See Page	Code		See Page
A9	A	42 (LHD)	D9	B	48 (RHD)	E3	A	44 (LHD)
		50 (RHD)	D16	A	40 (LHD)			52 (RHD)
A73	A	42 (LHD)			48 (RHD)	F3	B	44 (LHD)
		50 (RHD)	D17	B	40 (LHD)			52 (RHD)
D5	B	40 (LHD)			48 (RHD)	G18		44 (LHD)
		48 (RHD)	D40	A	41 (LHD)			52 (RHD)
D6	C	40 (LHD)			49 (RHD)	H26		45 (LHD)
		48 (RHD)	D41	B	41 (LHD)			53 (RHD)
D8	A	40 (LHD)			49 (RHD)	H27		45 (LHD)
		48 (RHD)	D43		41 (LHD)			53 (RHD)
D9	B	40 (LHD)			49 (RHD)			

▭ : **Relay Blocks**

Code	See Page	Relay Blocks (Relay Block Location)
1	24	Engine Room R/B (Engine Compartment Right)

▭ : **Junction Block and Wire Harness Connector**

Code	See Page	Junction Block and Wire Harness (Connector Location)
3A	26	Instrument Panel Wire and Instrument Panel J/B Assembly (Instrument Panel Reinforcement)
3B		
3C	26	Engine Room Main Wire and Instrument Panel J/B Assembly (Instrument Panel Reinforcement)
3D	26	Instrument Panel Wire and Instrument Panel J/B Assembly (Instrument Panel Reinforcement)

▭ : **Connector Joining Wire Harness and Wire Harness**

Code	See Page	Joining Wire Harness and Wire Harness (Connector Location)
AD1	55 (LHD)	Engine Room Main Wire and Instrument Panel Wire (Cowl Side Panel RH)
	59 (RHD)	
AD2	55 (LHD)	Engine Room Main Wire and Instrument Panel Wire (Instrument Panel Reinforcement)
ED1	55 (LHD)	Front Door Wire LH and Instrument Panel Wire (Cowl Side Panel LH)
	59 (RHD)	
ED2	55 (LHD)	
	59 (RHD)	
FD1	55 (LHD)	Front Door Wire RH and Instrument Panel Wire (Cowl Side Panel RH)
	59 (RHD)	
FD2	55 (LHD)	
	59 (RHD)	
GD1	55 (LHD)	No. 1 Floor Wire and Instrument Panel Wire (Cowl Side Panel RH)
	59 (RHD)	
HD1	55 (LHD)	No. 2 Floor Wire and Instrument Panel Wire (Cowl Side Panel LH)
	59 (RHD)	

▽ : **Ground Points**

Code	See Page	Ground Points Location
A3	55 (LHD)	Cowl Side Panel RH
	59 (RHD)	Cowl Side Panel LH
D1	55 (LHD)	
	59 (RHD)	Cowl Side Panel RH
D3	55 (LHD)	Instrument Panel Brace RH
	59 (RHD)	Instrument Panel Brace LH
D4	55 (LHD)	Cowl Side Panel RH
	59 (RHD)	Cowl Side Panel LH
H3	56 (LHD)	Quarter Wheel House Panel LH
	60 (RHD)	

D57(A), (B), D58(C), (D)
Windshield Wiper Switch Assembly

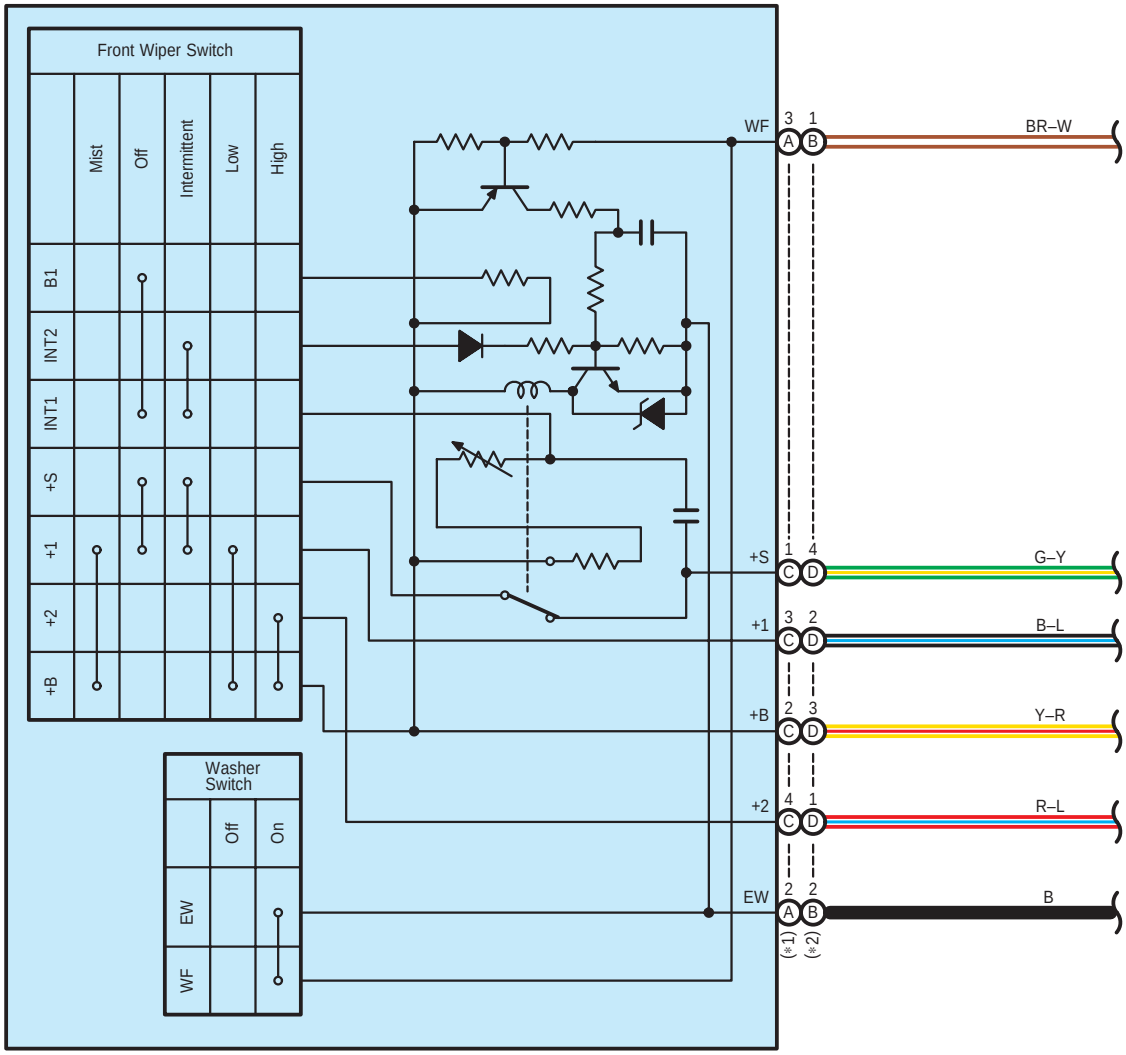

* 1 : Headlight Dimmer Switch Assembly LH Side Type
* 2 : Headlight Dimmer Switch Assembly RH Side Type

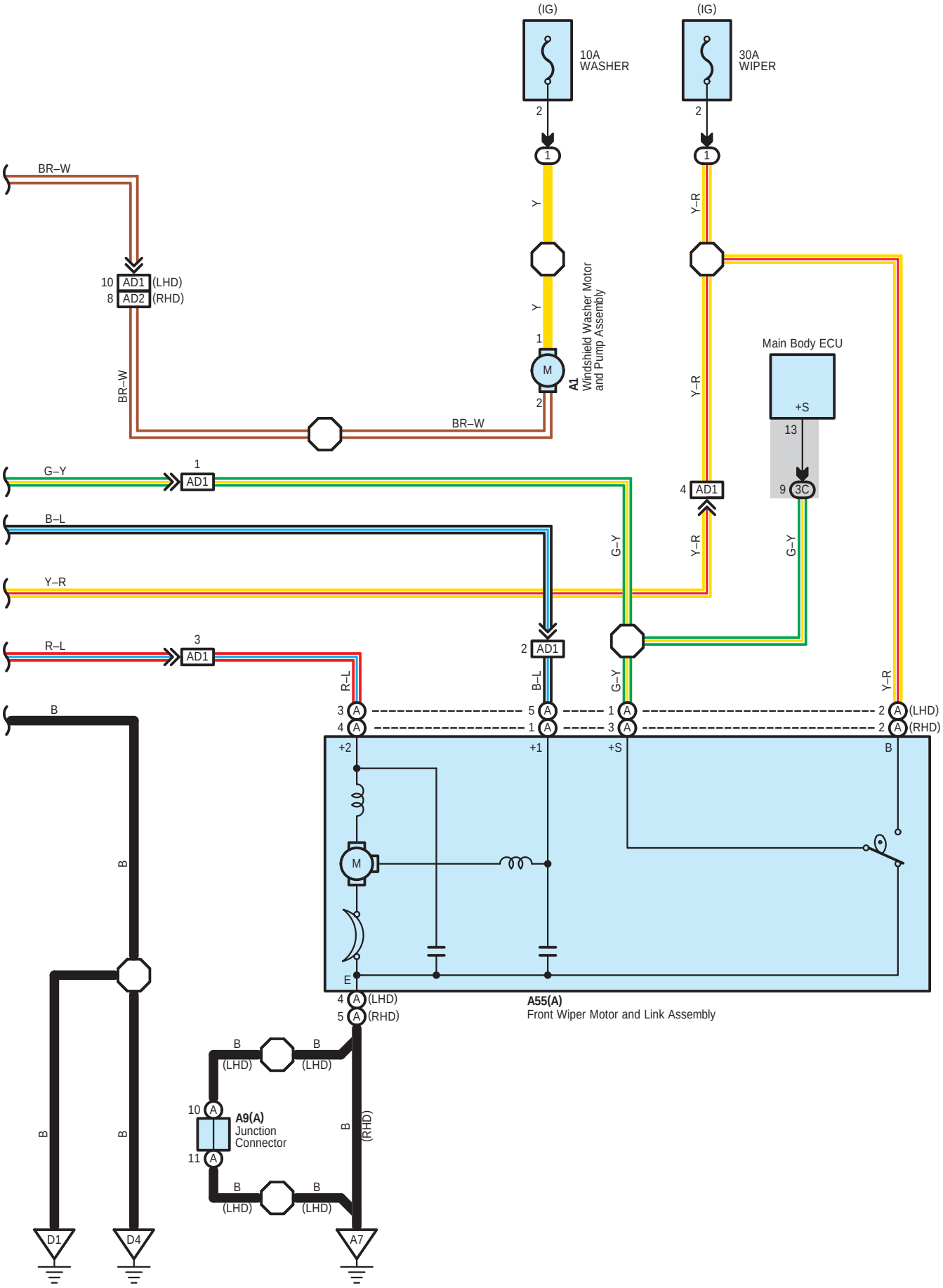
(IG)
10A
WASHER
(IG)
30A
WIPER
BR–W
Y
Y–R
10 AD1 (LHD)
8 AD2 (RHD)
A1
Windshield Washer Motor
and Pump Assembly
Main Body ECU
+S
13
9 3C
BR–W
G–Y
B–L
Y–R
R–L
B
AD1
A55(A)
Front Wiper Motor and Link Assembly
A9(A)
Junction
Connector
(LHD)
(RHD)
D1
D4
A7

Front Wiper and Washer

○ : **Parts Location**

Code		See Page	Code		See Page	Code		See Page
A1		39 (LHD)	A55	A	47 (RHD)	D58	C	41 (LHD)
		47 (RHD)	D57	A	41 (LHD)			49 (RHD)
A9	A	42 (LHD)			49 (RHD)		D	49 (RHD)
A55	A	39 (LHD)		B	49 (RHD)			

Relay Blocks

Code	See Page	Relay Blocks (Relay Block Location)
1	24	Engine Room R/B (Engine Compartment Right)

Junction Block and Wire Harness Connector

Code	See Page	Junction Block and Wire Harness (Connector Location)
3C	26	Engine Room Main Wire and Instrument Panel J/B Assembly (Instrument Panel Reinforcement)

Connector Joining Wire Harness and Wire Harness

Code	See Page	Joining Wire Harness and Wire Harness (Connector Location)
AD1	55 (LHD)	Engine Room Main Wire and Instrument Panel Wire (Cowl Side Panel RH)
	59 (RHD)	
AD2	59 (RHD)	Engine Room Main Wire and Instrument Panel Wire (Instrument Panel Reinforcement)

▽ : **Ground Points**

Code	See Page	Ground Points Location
A7	54 (LHD)	Front Fender Apron RH
	58 (RHD)	
D1	55 (LHD)	Cowl Side Panel LH
	59 (RHD)	Cowl Side Panel RH
D4	55 (LHD)	
	59 (RHD)	Cowl Side Panel LH

Remote Control Mirror (LHD)

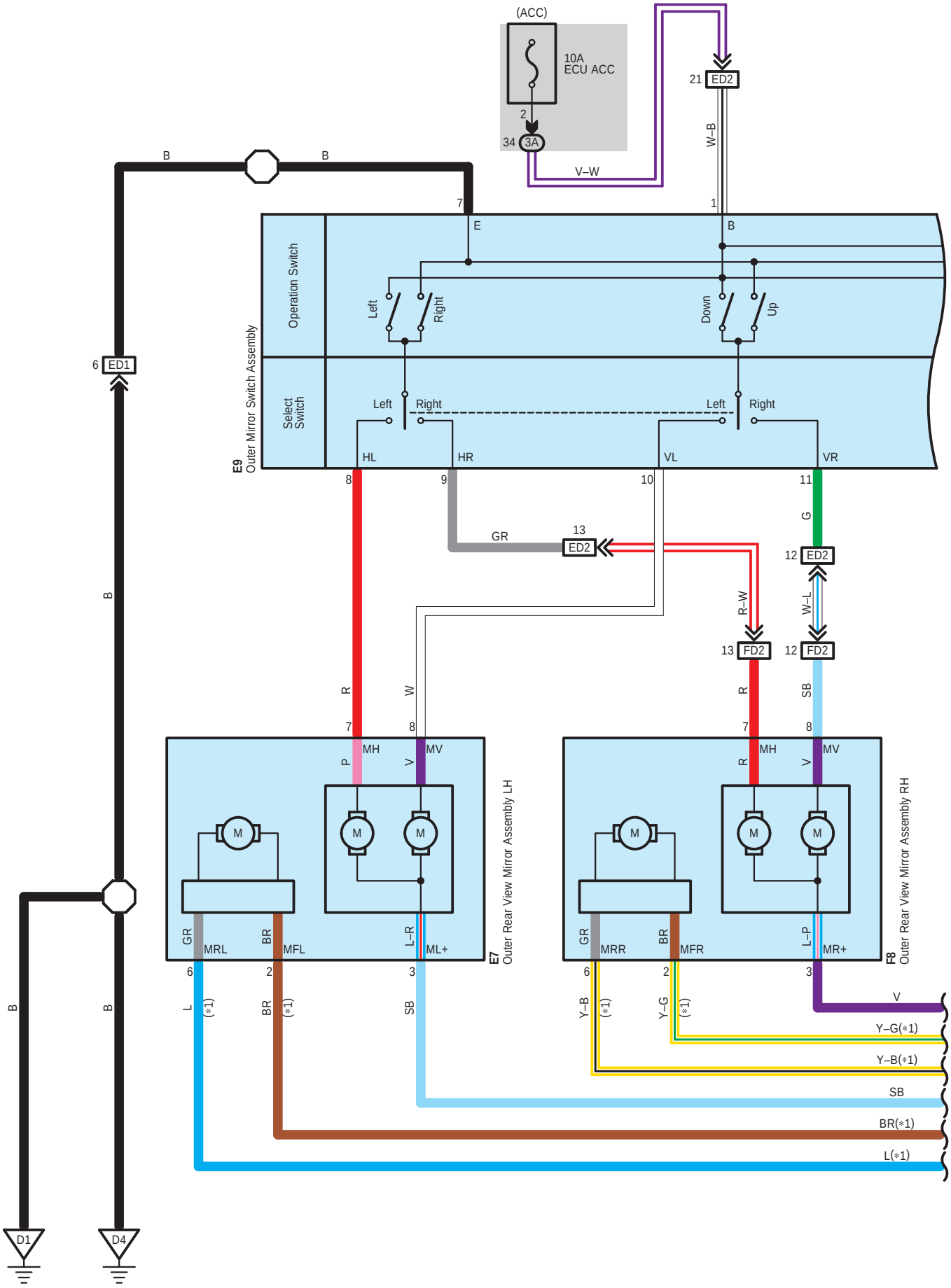

∗ 1 : w/ Retract Mirror

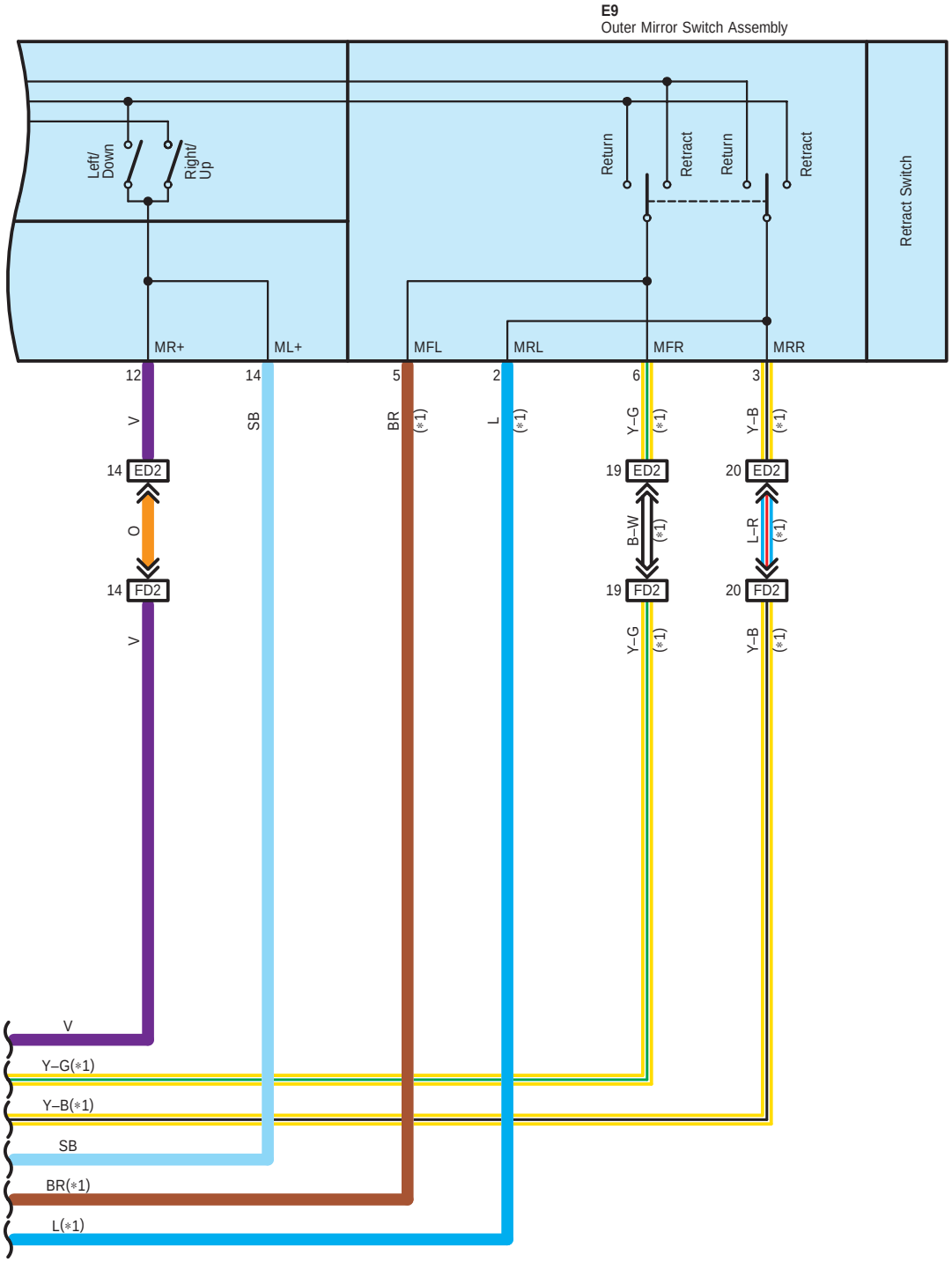

Remote Control Mirror (LHD)

○ : **Parts Location**

Code	See Page	Code	See Page	Code	See Page
E7	44 (LHD)	E9	44 (LHD)	F8	44 (LHD)

Junction Block and Wire Harness Connector

Code	See Page	Junction Block and Wire Harness (Connector Location)
3A	26	Instrument Panel Wire and Instrument Panel J/B Assembly (Instrument Panel Reinforcement)

□ : **Connector Joining Wire Harness and Wire Harness**

Code	See Page	Joining Wire Harness and Wire Harness (Connector Location)
ED1	55 (LHD)	Front Door Wire LH and Instrument Panel Wire (Cowl Side Panel LH)
ED2		
FD2	55 (LHD)	Front Door Wire RH and Instrument Panel Wire (Cowl Side Panel RH)

▽ : **Ground Points**

Code	See Page	Ground Points Location
D1	55 (LHD)	Cowl Side Panel LH
D4	55 (LHD)	Cowl Side Panel RH

Remote Control Mirror (RHD)

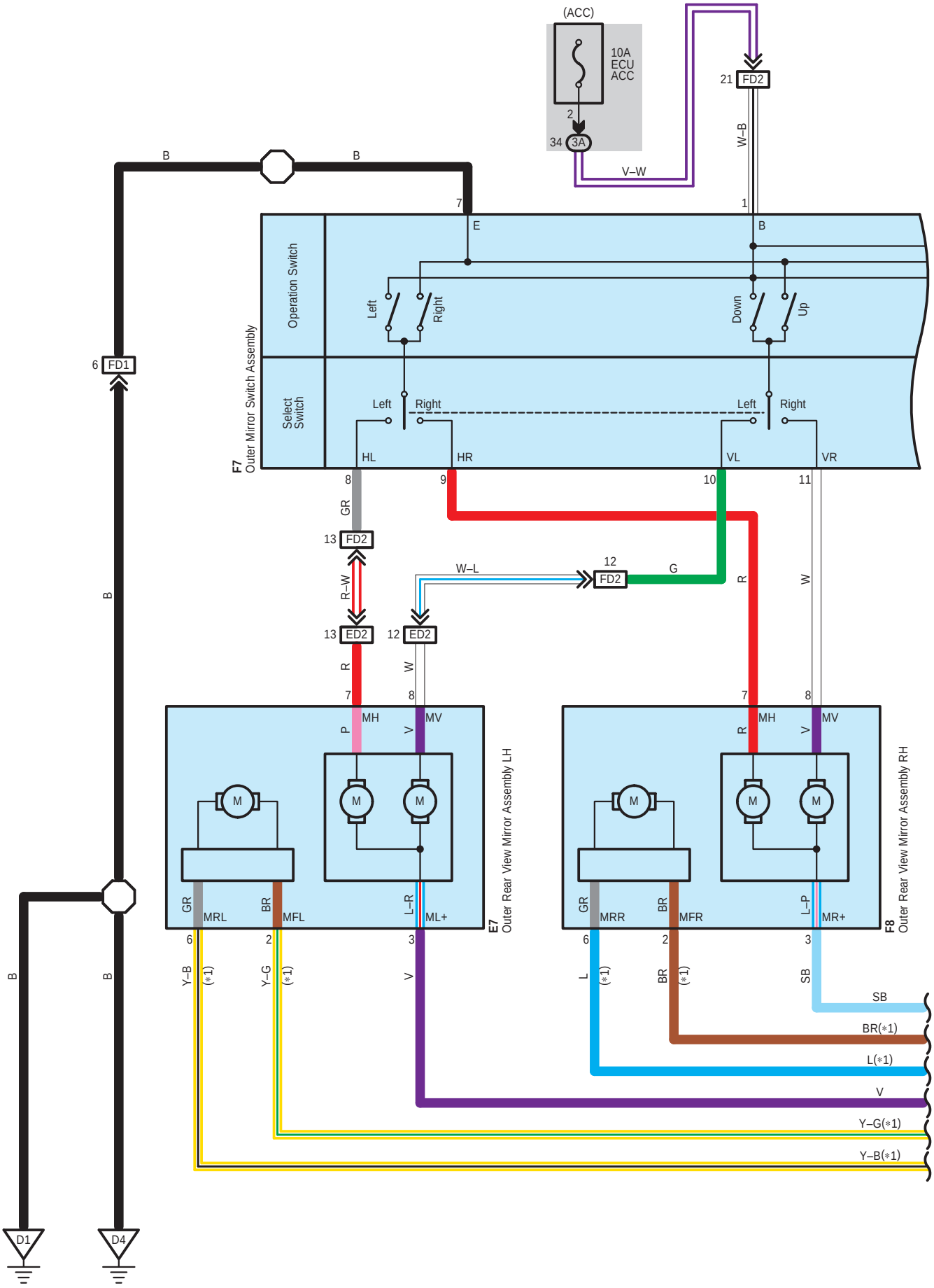

∗ 1 : w/ Retract Mirror

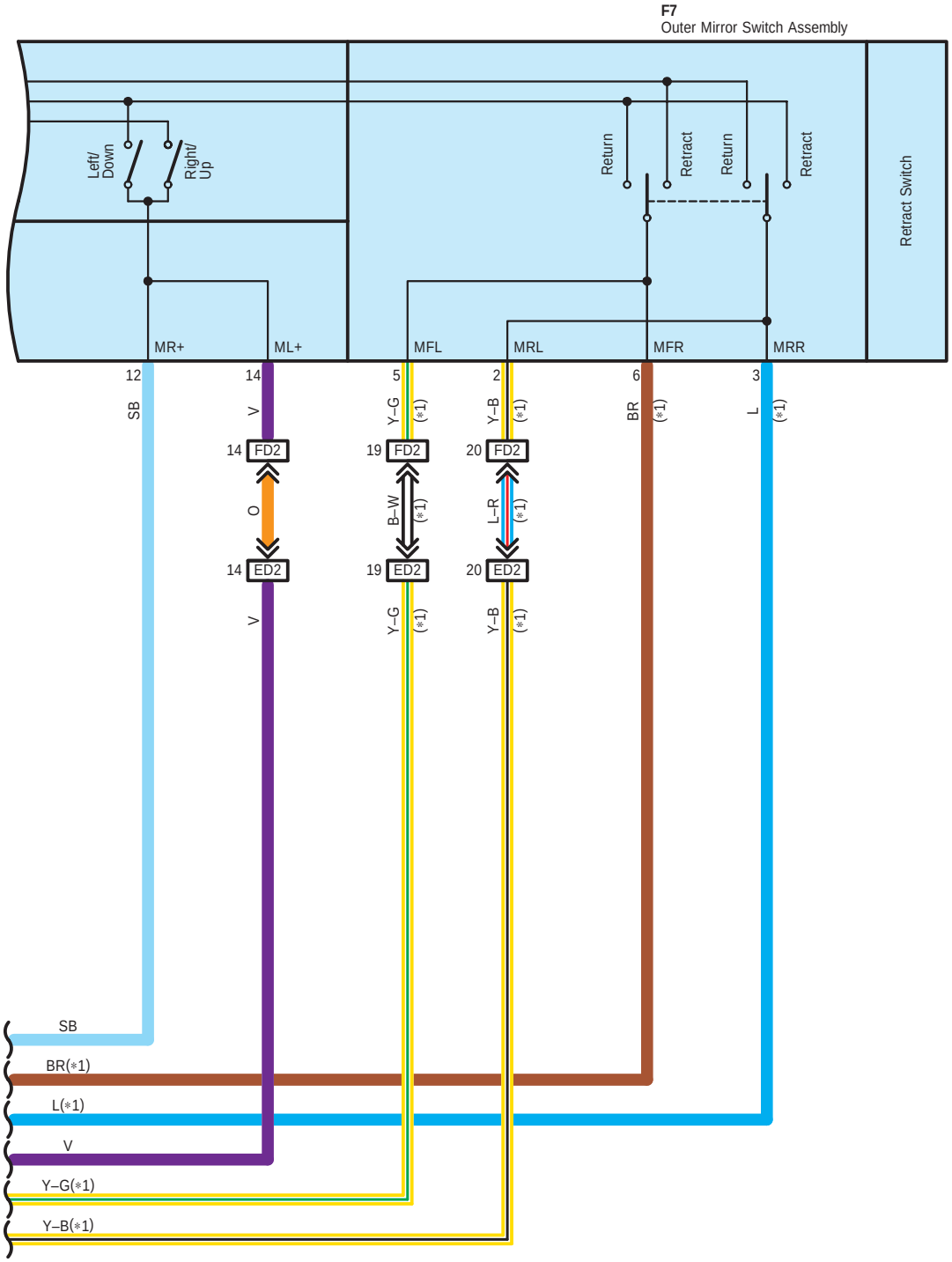

Remote Control Mirror (RHD)

○ : **Parts Location**

Code	See Page	Code	See Page	Code	See Page
E7	52 (RHD)	F7	52 (RHD)	F8	52 (RHD)

Junction Block and Wire Harness Connector

Code	See Page	Junction Block and Wire Harness (Connector Location)
3A	26	Instrument Panel Wire and Instrument Panel J/B Assembly (Instrument Panel Reinforcement)

Connector Joining Wire Harness and Wire Harness

Code	See Page	Joining Wire Harness and Wire Harness (Connector Location)
ED2	59 (RHD)	Front Door Wire LH and Instrument Panel Wire (Cowl Side Panel LH)
FD1	59 (RHD)	Front Door Wire RH and Instrument Panel Wire (Cowl Side Panel RH)
FD2		

▽ : **Ground Points**

Code	See Page	Ground Points Location
D1	59 (RHD)	Cowl Side Panel RH
D4	59 (RHD)	Cowl Side Panel LH

Mirror Heater and Rear Window Defogger

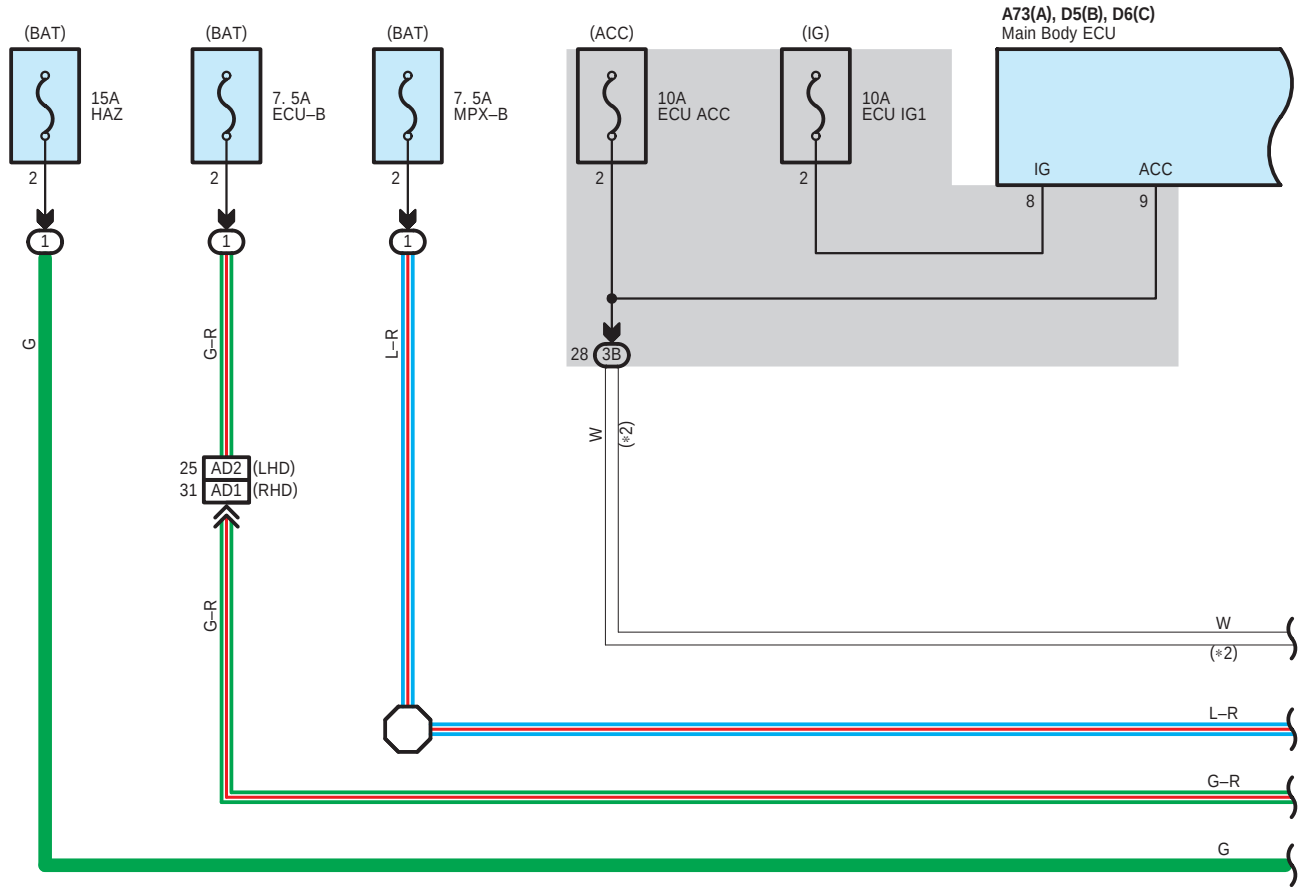

* 2 : w/ Entry & Start System

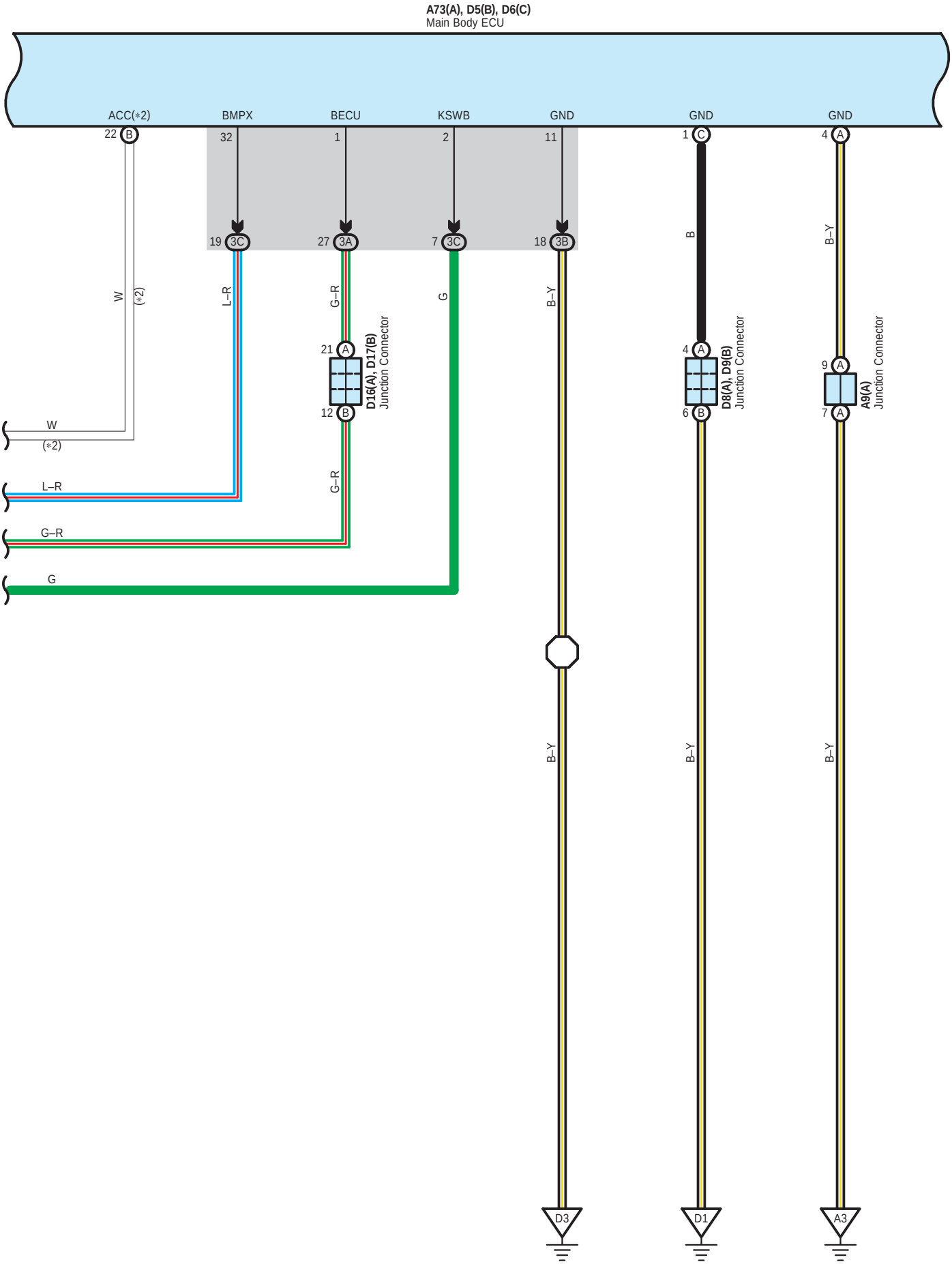
A73(A), D5(B), D6(C)
Main Body ECU
ACC(*2)
BMPX
BECU
KSWB
GND
GND
GND
22 B
32
1
2
11
1 C
4 A
19 3C
27 3A
7 3C
18 3B
W
(*2)
L–R
G–R
G
B–Y
B
B–Y
21 A
12 B
D16(A), D17(B)
Junction Connector
4 A
6 B
D8(A), D9(B)
Junction Connector
9 A
7 A
A9(A)
Junction Connector
W
(*2)
L–R
G–R
G
D3
D1
A3

Mirror Heater and Rear Window Defogger

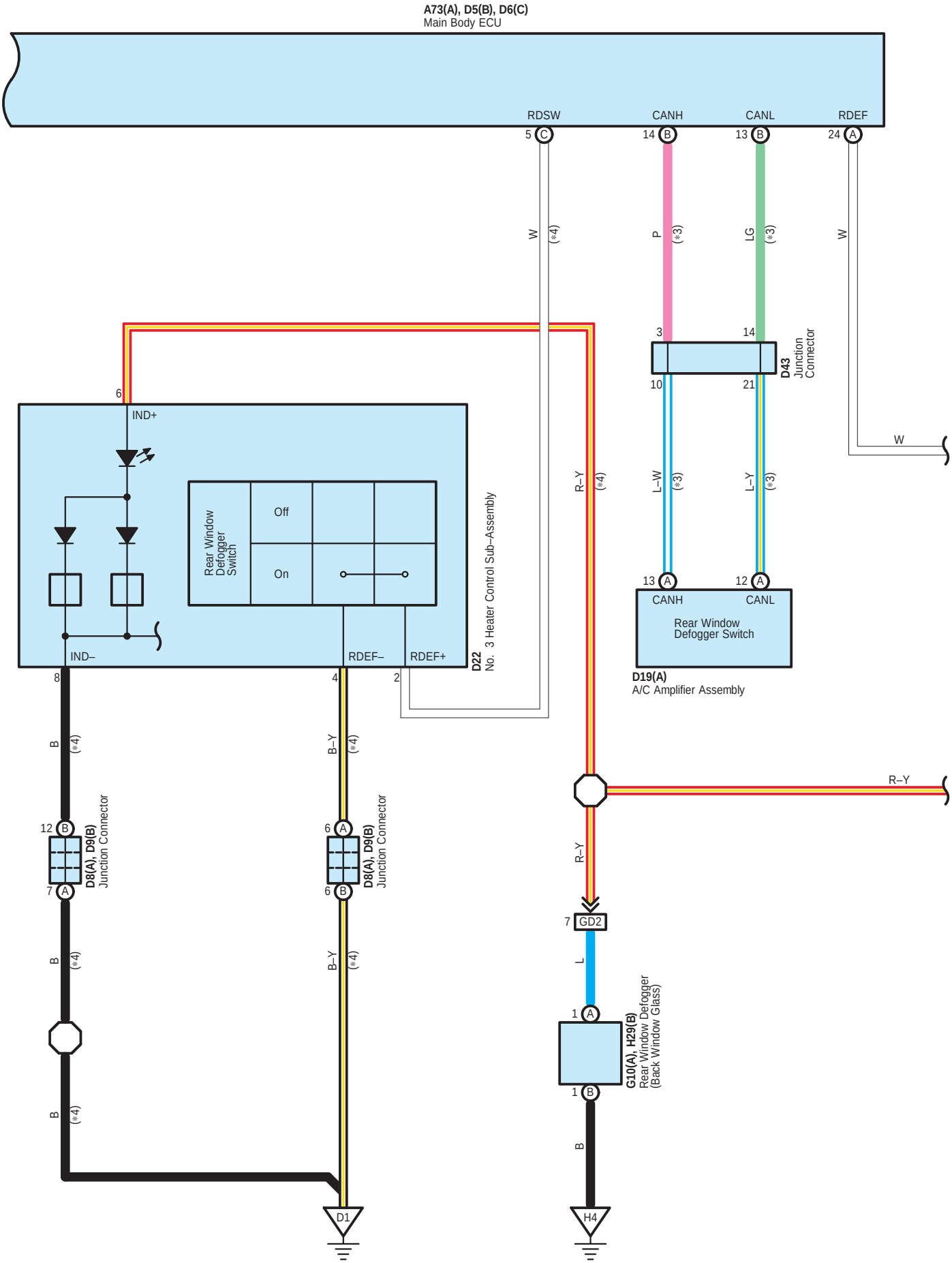

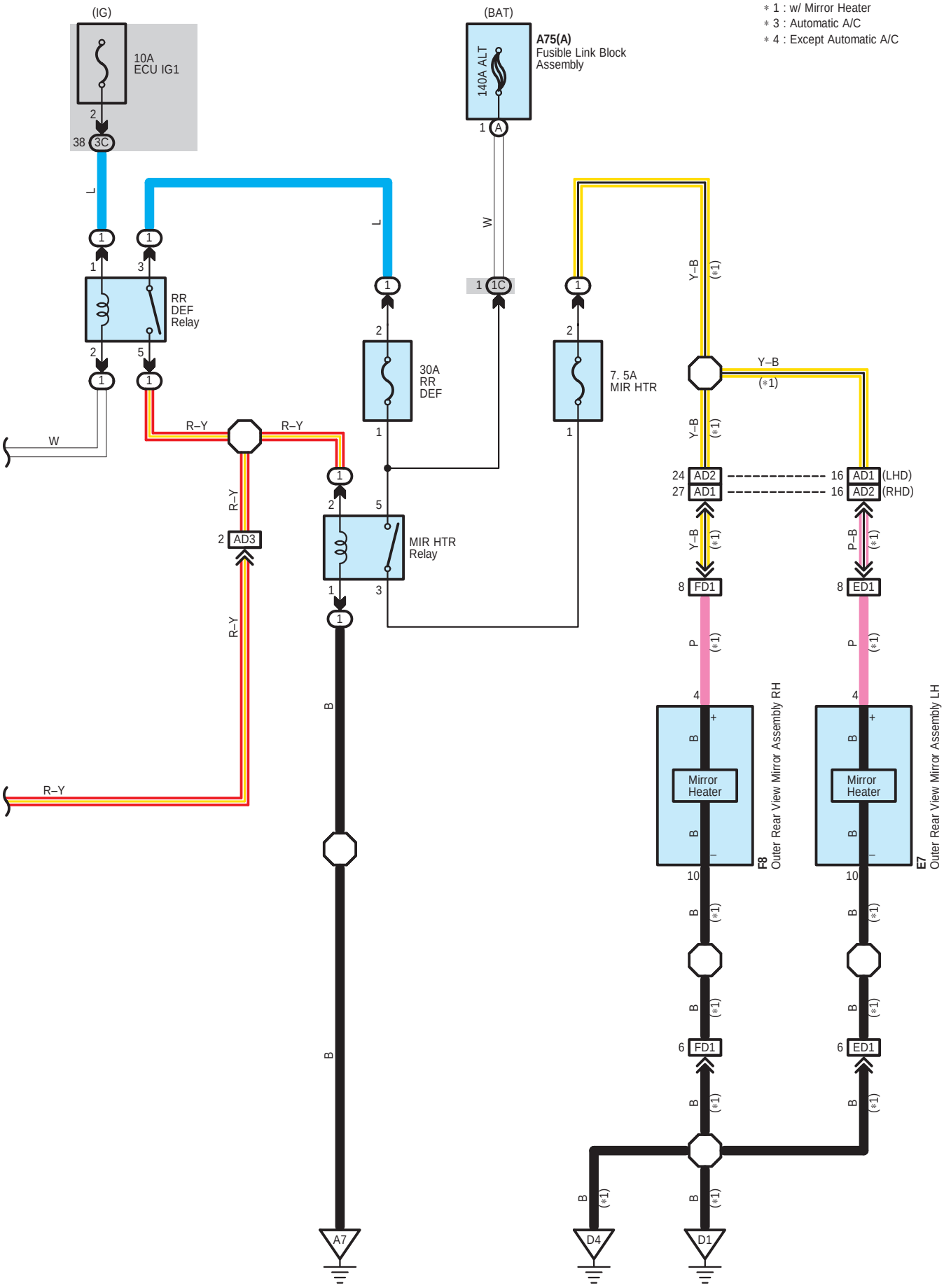
(IG)
10A
ECU IG1
38 3C
(BAT)
140A ALT
A75(A)
Fusible Link Block
Assembly
1 A
1 1C
RR
DEF
Relay
30A
RR
DEF
7. 5A
MIR HTR
MIR HTR
Relay
AD3
AD2
AD1
FD1
ED1
Mirror
Heater
F8
Outer Rear View Mirror Assembly RH
E7
Outer Rear View Mirror Assembly LH
(LHD)
(RHD)
A7
D4
D1
W
L
R–Y
Y–B
P–B
P
B
(*1)
* 1 : w/ Mirror Heater
* 3 : Automatic A/C
* 4 : Except Automatic A/C

Mirror Heater and Rear Window Defogger

: Parts Location

Code		See Page	Code		See Page	Code		See Page
A9	A	42 (LHD)	D8	A	48 (RHD)	D43		41 (LHD)
		50 (RHD)	D9	B	40 (LHD)			49 (RHD)
A73	A	42 (LHD)			48 (RHD)	E7		44 (LHD)
		50 (RHD)	D16	A	40 (LHD)			52 (RHD)
A75	A	39 (LHD)			48 (RHD)	F8		44 (LHD)
		47 (RHD)	D17	B	40 (LHD)			52 (RHD)
D5	B	40 (LHD)			48 (RHD)	G10	A	44 (LHD)
		48 (RHD)	D19	A	40 (LHD)			52 (RHD)
D6	C	40 (LHD)			48 (RHD)	H29	B	45 (LHD)
		48 (RHD)	D22		40 (LHD)			53 (RHD)
D8	A	40 (LHD)			48 (RHD)			

: Relay Blocks

Code	See Page	Relay Blocks (Relay Block Location)
1	24	Engine Room R/B (Engine Compartment Right)

: Junction Block and Wire Harness Connector

Code	See Page	Junction Block and Wire Harness (Connector Location)
1C	24	Engine Room Main Wire and Engine Room J/B (Engine Compartment Right)
3A	26	Instrument Panel Wire and Instrument Panel J/B Assembly (Instrument Panel Reinforcement)
3B		
3C	26	Engine Room Main Wire and Instrument Panel J/B Assembly (Instrument Panel Reinforcement)

: Connector Joining Wire Harness and Wire Harness

Code	See Page	Joining Wire Harness and Wire Harness (Connector Location)
AD1	55 (LHD)	Engine Room Main Wire and Instrument Panel Wire (Cowl Side Panel RH)
	59 (RHD)	
AD2	55 (LHD)	Engine Room Main Wire and Instrument Panel Wire (Instrument Panel Reinforcement)
	59 (RHD)	
AD3	55 (LHD)	Engine Room Main Wire and Instrument Panel Wire (Cowl Side Panel LH)
	59 (RHD)	Engine Room Main Wire and Instrument Panel Wire (Cowl Side Panel RH)
ED1	55 (LHD)	Front Door Wire LH and Instrument Panel Wire (Cowl Side Panel LH)
	59 (RHD)	
FD1	55 (LHD)	Front Door Wire RH and Instrument Panel Wire (Cowl Side Panel RH)
	59 (RHD)	
GD2	55 (LHD)	No. 1 Floor Wire and Instrument Panel Wire (Cowl Side Panel RH)
	59 (RHD)	

: Ground Points

Code	See Page	Ground Points Location
A3	55 (LHD)	Cowl Side Panel RH
	59 (RHD)	Cowl Side Panel LH
A7	54 (LHD)	Front Fender Apron RH
	58 (RHD)	
D1	55 (LHD)	Cowl Side Panel LH
	59 (RHD)	Cowl Side Panel RH
D3	55 (LHD)	Instrument Panel Brace RH
	59 (RHD)	Instrument Panel Brace LH
D4	55 (LHD)	Cowl Side Panel RH
	59 (RHD)	Cowl Side Panel LH
H4	56 (LHD)	Upper Back Panel
	60 (RHD)	

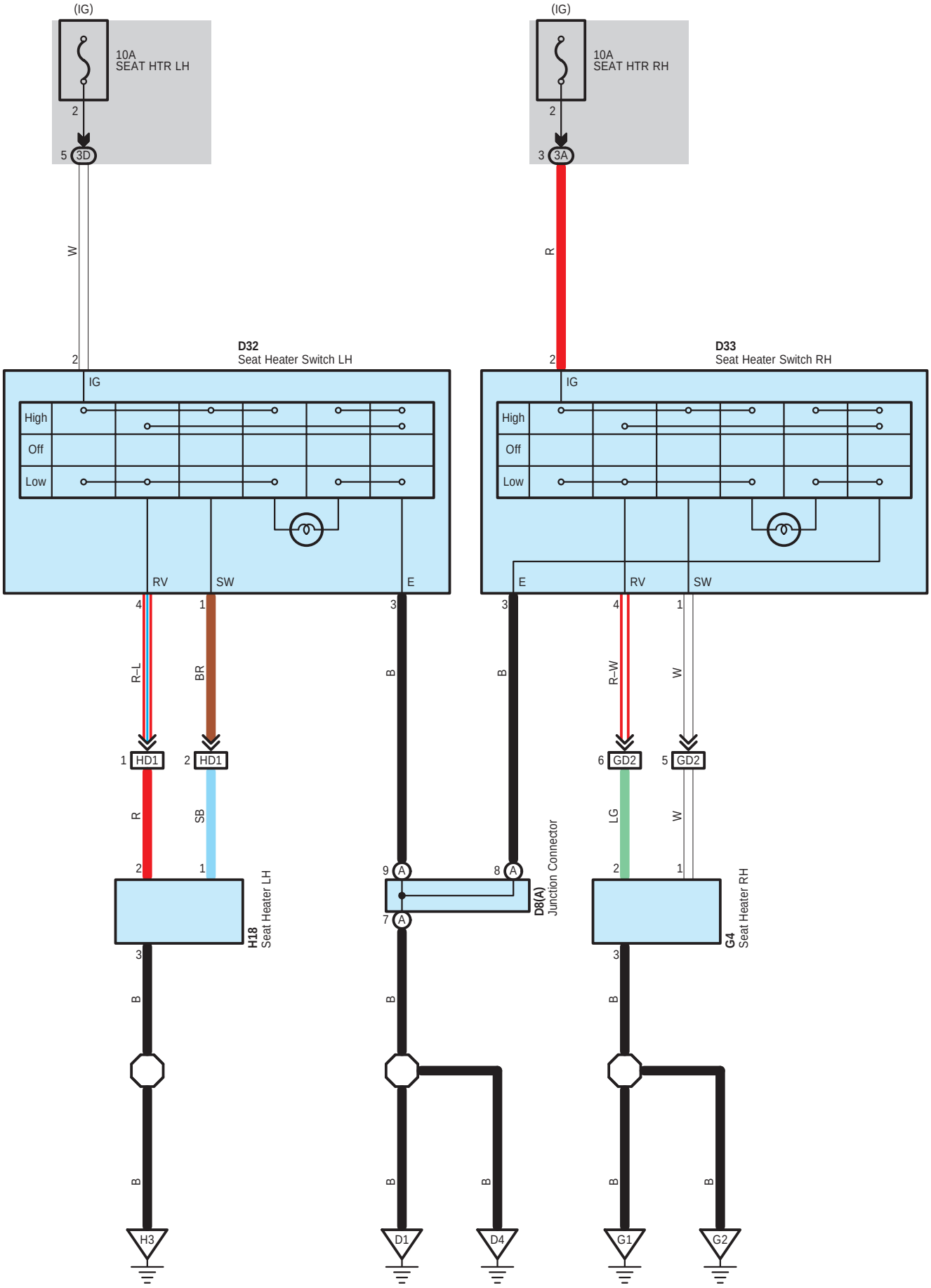
(IG)
10A
SEAT HTR LH
2
5 3D
W
(IG)
10A
SEAT HTR RH
2
3 3A
R
D32
Seat Heater Switch LH
2
IG
High
Off
Low
RV
SW
E
D33
Seat Heater Switch RH
2
IG
High
Off
Low
E
RV
SW
4
1
3
R–L
BR
B
3
B
4
1
R–W
W
1 HD1
2 HD1
6 GD2
5 GD2
R
SB
LG
W
2
1
9 A
8 A
7 A
D8(A)
Junction Connector
2
1
H18
Seat Heater LH
G4
Seat Heater RH
3
B
B
3
B
B
B
B
B
B
H3
D1
D4
G1
G2

○ : **Parts Location**

Code		See Page	Code	See Page	Code	See Page
D8	A	40 (LHD)	D33	40 (LHD)	H18	45 (LHD)
		48 (RHD)		48 (RHD)		53 (RHD)
D32		40 (LHD)	G4	44 (LHD)		
		48 (RHD)		52 (RHD)		

Junction Block and Wire Harness Connector

Code	See Page	Junction Block and Wire Harness (Connector Location)
3A	26	Instrument Panel Wire and Instrument Panel J/B Assembly (Instrument Panel Reinforcement)
3D		

Connector Joining Wire Harness and Wire Harness

Code	See Page	Joining Wire Harness and Wire Harness (Connector Location)
GD2	55 (LHD)	No. 1 Floor Wire and Instrument Panel Wire (Cowl Side Panel RH)
	59 (RHD)	
HD1	55 (LHD)	No. 2 Floor Wire and Instrument Panel Wire (Cowl Side Panel LH)
	59 (RHD)	

▽ : **Ground Points**

Code	See Page	Ground Points Location
D1	55 (LHD)	Cowl Side Panel LH
	59 (RHD)	Cowl Side Panel RH
D4	55 (LHD)	
	59 (RHD)	Cowl Side Panel LH
G1	56 (LHD)	Quarter Wheel House Panel RH
	60 (RHD)	
G2	56 (LHD)	
	60 (RHD)	
H3	56 (LHD)	Quarter Wheel House Panel LH
	60 (RHD)	

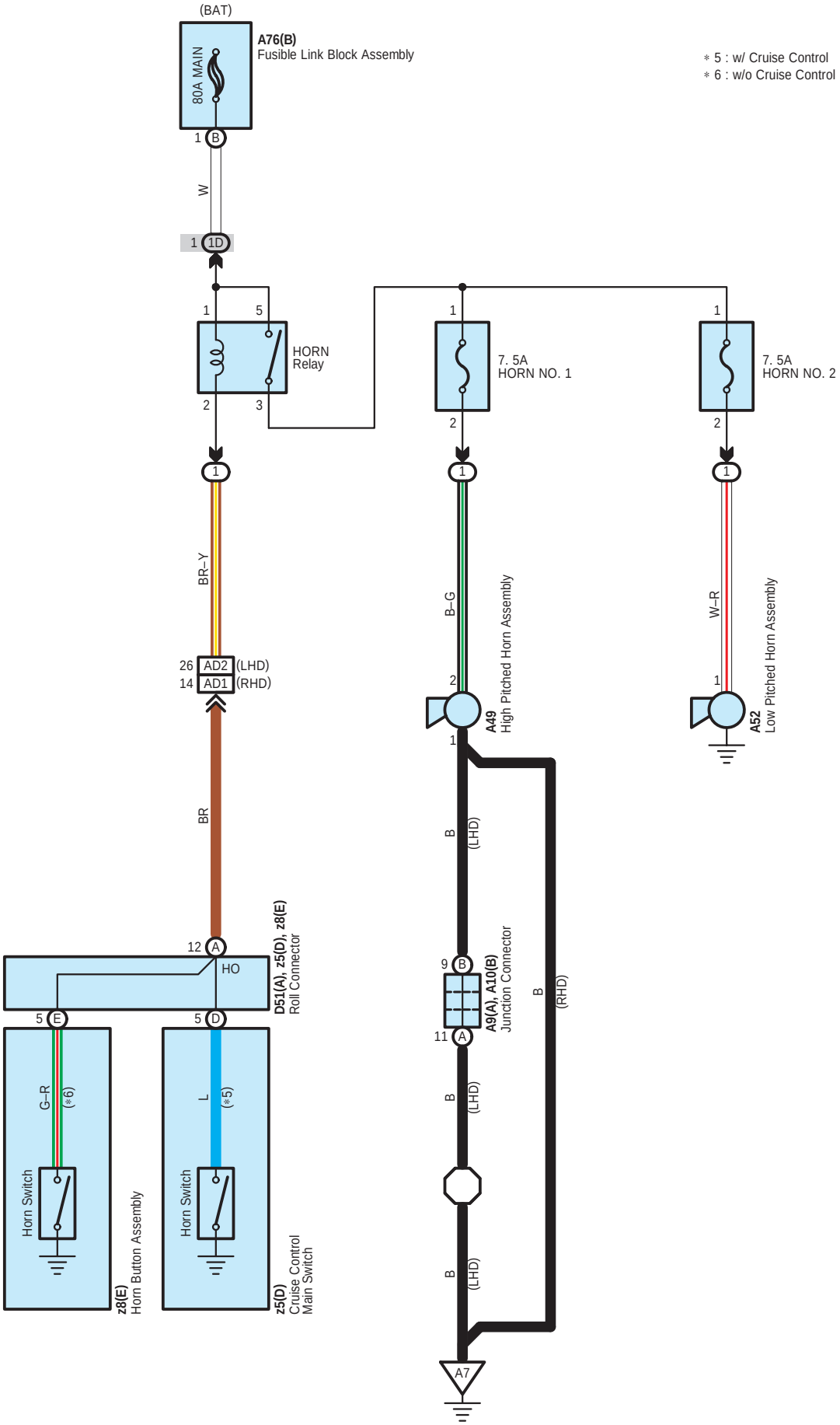
(BAT)
A76(B)
Fusible Link Block Assembly
80A MAIN
1 B
W
1 1D
1
5
HORN
Relay
2
3
1
7. 5A
HORN NO. 1
2
1
7. 5A
HORN NO. 2
2
1
BR–Y
26 AD2 (LHD)
14 AD1 (RHD)
BR
12 A
HO
D51(A), z5(D), z8(E)
Roll Connector
5 E
5 D
G–R
(*6)
Horn Switch
z8(E)
Horn Button Assembly
L
(*5)
Horn Switch
z5(D)
Cruise Control
Main Switch
B–G
2
A49
High Pitched Horn Assembly
1
B
(LHD)
9 B
A9(A), A10(B)
Junction Connector
11 A
B
(LHD)
B
(LHD)
B
(RHD)
A7
W–R
1
A52
Low Pitched Horn Assembly
* 5 : w/ Cruise Control
* 6 : w/o Cruise Control

○ : **Parts Location**

Code		See Page	Code		See Page	Code		See Page
A9	A	42 (LHD)	A52		47 (RHD)	z5	D	42 (LHD)
A10	B	42 (LHD)	A76	B	39 (LHD)			50 (RHD)
A49		39 (LHD)			47 (RHD)	z8	E	42 (LHD)
		47 (RHD)	D51	A	41 (LHD)			50 (RHD)
A52		39 (LHD)			49 (RHD)			

Relay Blocks

Code	See Page	Relay Blocks (Relay Block Location)
1	24	Engine Room R/B (Engine Compartment Right)

Junction Block and Wire Harness Connector

Code	See Page	Junction Block and Wire Harness (Connector Location)
1D	24	Engine Room Main Wire and Engine Room J/B (Engine Compartment Right)

Connector Joining Wire Harness and Wire Harness

Code	See Page	Joining Wire Harness and Wire Harness (Connector Location)
AD1	59 (RHD)	Engine Room Main Wire and Instrument Panel Wire (Cowl Side Panel RH)
AD2	55 (LHD)	Engine Room Main Wire and Instrument Panel Wire (Instrument Panel Reinforcement)

▽ : **Ground Points**

Code	See Page	Ground Points Location
A7	54 (LHD)	Front Fender Apron RH
	58 (RHD)	

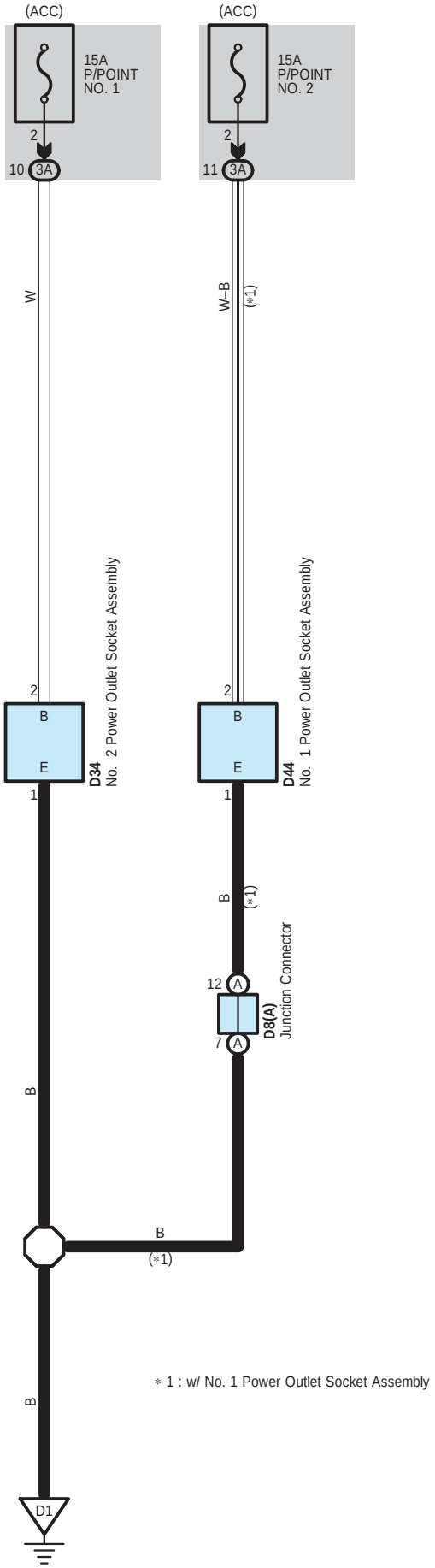
(ACC)
15A
P/POINT
NO. 1
2
10
3A
(ACC)
15A
P/POINT
NO. 2
2
11
3A
W
W–B
(*1)
2
B
E
1
D34
No. 2 Power Outlet Socket Assembly
2
B
E
1
D44
No. 1 Power Outlet Socket Assembly
B
(*1)
12
A
7
A
D8(A)
Junction Connector
B
B
(*1)
B
D1
* 1 : w/ No. 1 Power Outlet Socket Assembly

○ : **Parts Location**

Code		See Page	Code	See Page	Code	See Page
D8	A	40 (LHD)	D34	40 (LHD)	D44	41 (LHD)
		48 (RHD)		48 (RHD)		49 (RHD)

: Junction Block and Wire Harness Connector

Code	See Page	Junction Block and Wire Harness (Connector Location)
3A	26	Instrument Panel Wire and Instrument Panel J/B Assembly (Instrument Panel Reinforcement)

▽ : **Ground Points**

Code	See Page	Ground Points Location
D1	55 (LHD)	Cowl Side Panel LH
	59 (RHD)	Cowl Side Panel RH

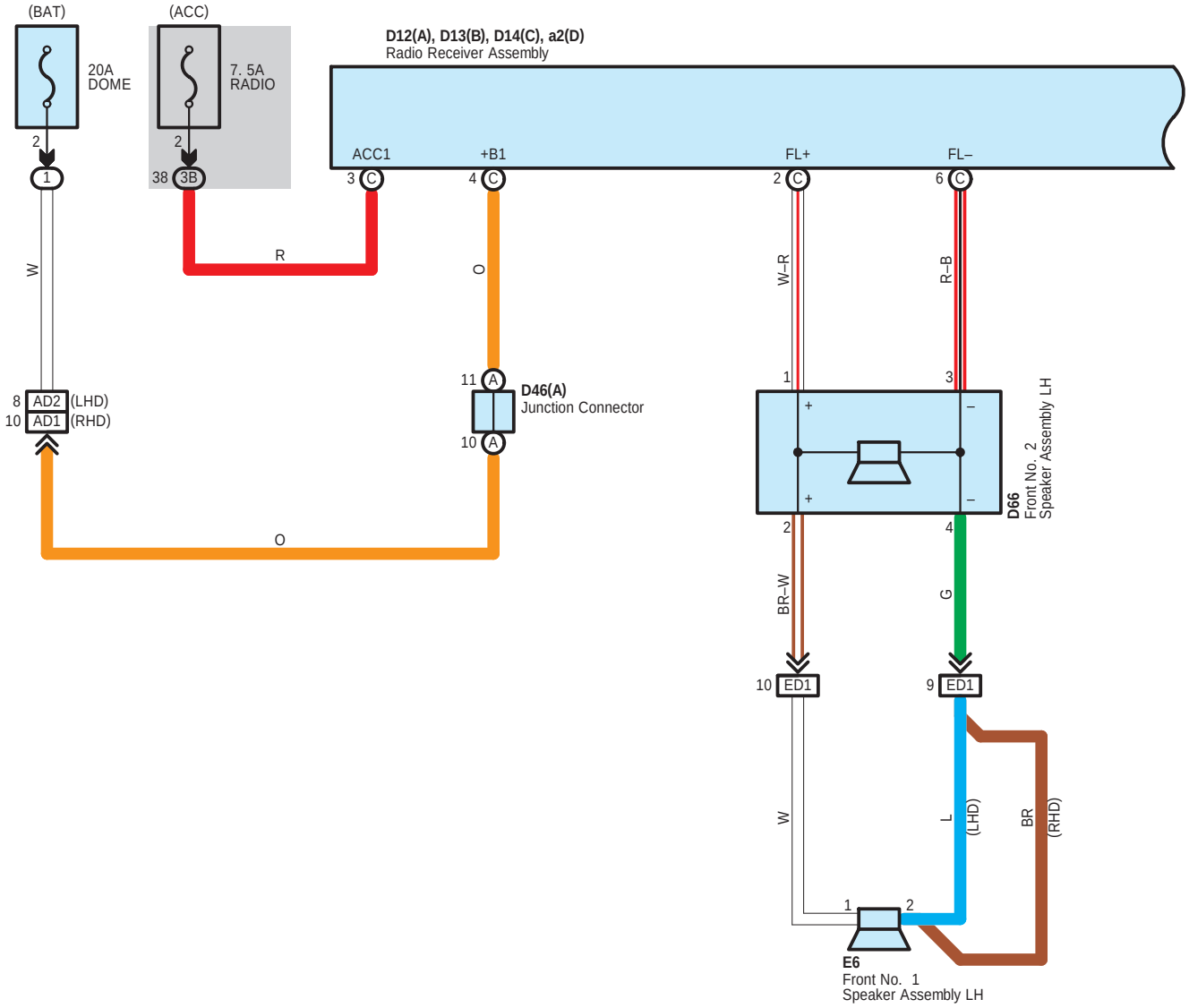
(BAT)
(ACC)
20A
DOME
7. 5A
RADIO
D12(A), D13(B), D14(C), a2(D)
Radio Receiver Assembly
ACC1
+B1
FL+
FL–
W
R
O
W–R
R–B
D46(A)
Junction Connector
AD2 (LHD)
AD1 (RHD)
D66
Front No. 2
Speaker Assembly LH
BR–W
G
ED1
W
L (LHD)
BR (RHD)
E6
Front No. 1
Speaker Assembly LH

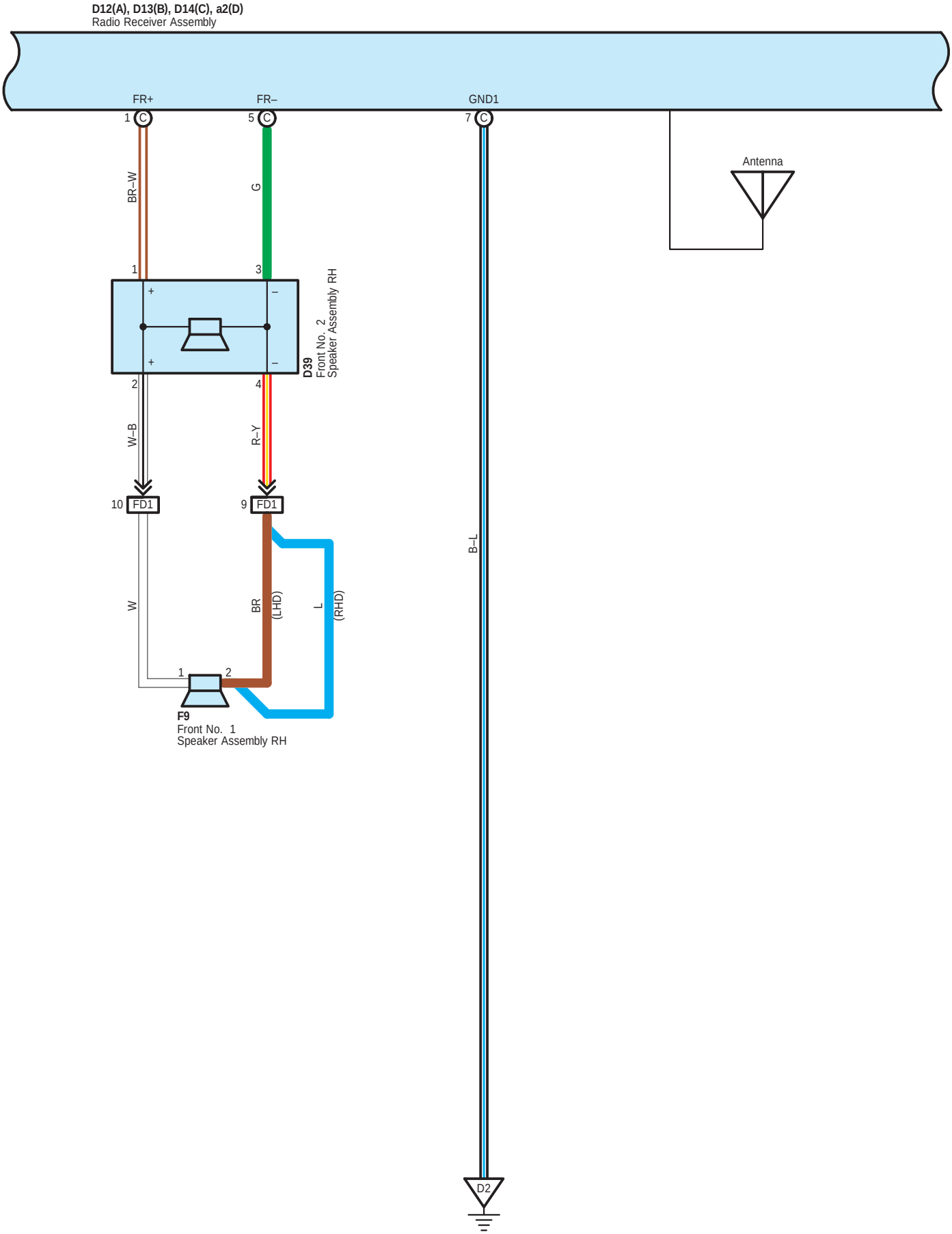
D12(A), D13(B), D14(C), a2(D)
Radio Receiver Assembly
FR+
FR–
GND1
1 C
5 C
7 C
BR–W
G
Antenna
1
3
+
–
+
–
D39
Front No. 2
Speaker Assembly RH
2
4
W–B
R–Y
10 FD1
9 FD1
B–L
W
BR
(LHD)
L
(RHD)
1
2
F9
Front No. 1
Speaker Assembly RH
D2

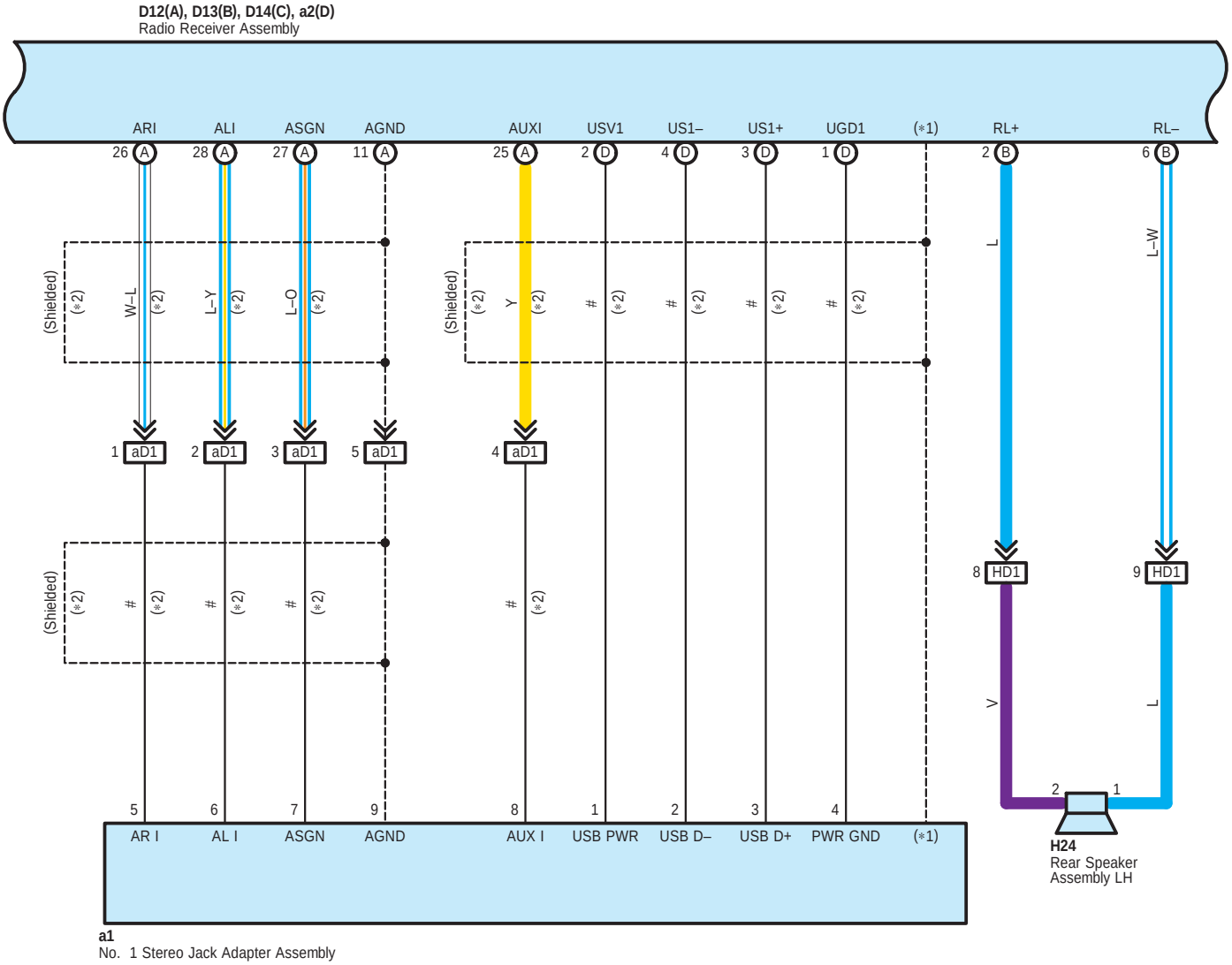

:There is no wire color information.

* 1 : Shield Connector
* 2 : w/ No. 1 Stereo Jack Adapter Assembly

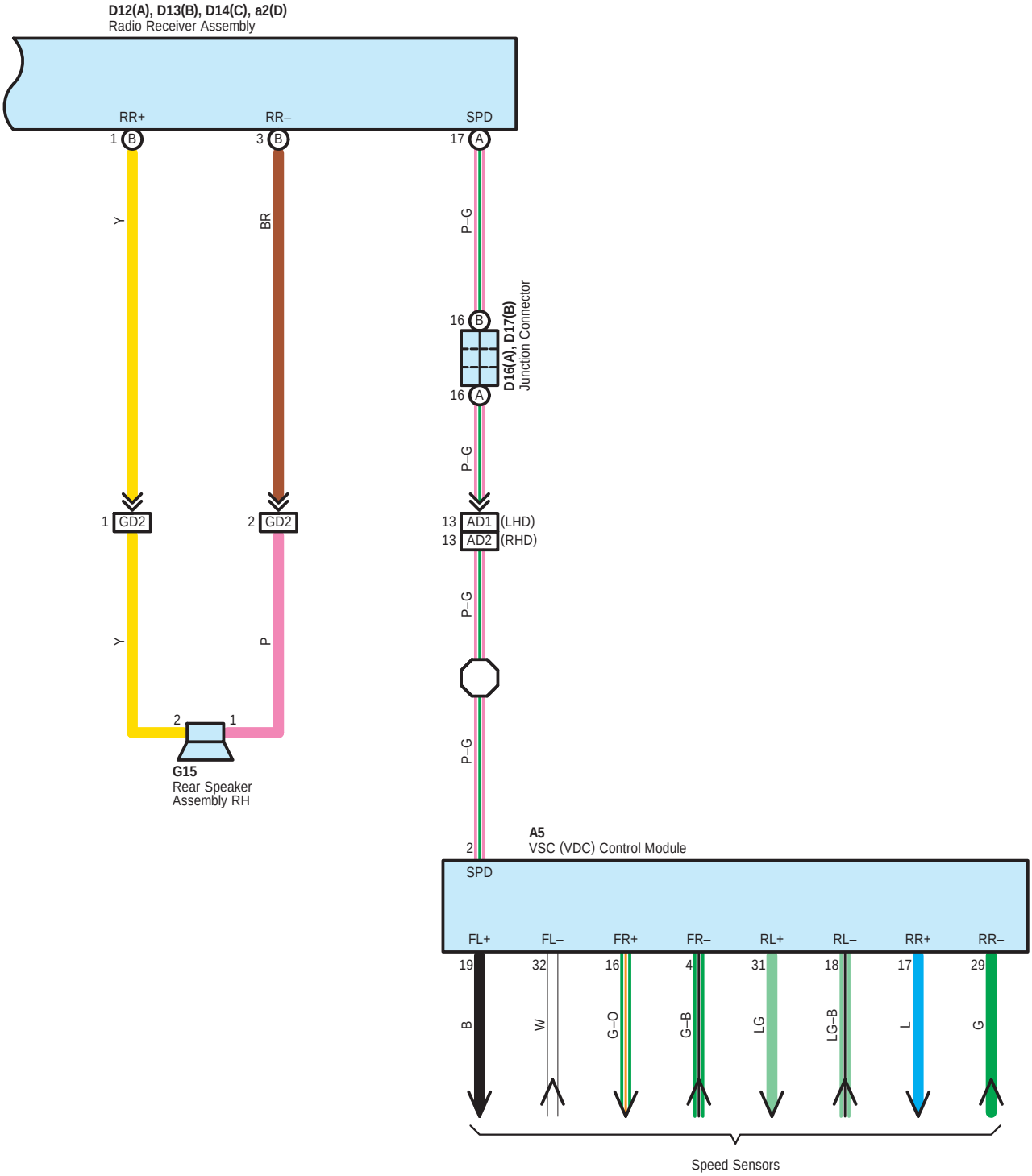
D12(A), D13(B), D14(C), a2(D)
Radio Receiver Assembly
RR+
RR–
SPD
1 B
3 B
17 A
Y
BR
P–G
16 B
16 A
D16(A), D17(B)
Junction Connector
P–G
1 GD2
2 GD2
13 AD1 (LHD)
13 AD2 (RHD)
Y
P
P–G
2
1
G15
Rear Speaker
Assembly RH
P–G
A5
VSC (VDC) Control Module
2
SPD
FL+
FL–
FR+
FR–
RL+
RL–
RR+
RR–
19
32
16
4
31
18
17
29
B
W
G–O
G–B
LG
LG–B
L
G
Speed Sensors

○ : **Parts Location**

Code		See Page	Code		See Page	Code		See Page
A5		39 (LHD)	D17	B	40 (LHD)	F9		44 (LHD)
		47 (RHD)			48 (RHD)			52 (RHD)
D12	A	40 (LHD)	D39		40 (LHD)	G15		44 (LHD)
		48 (RHD)			48 (RHD)			52 (RHD)
D13	B	40 (LHD)	D46	A	41 (LHD)	H24		45 (LHD)
		48 (RHD)			49 (RHD)			53 (RHD)
D14	C	40 (LHD)	D66		41 (LHD)	a1		42 (LHD)
		48 (RHD)			49 (RHD)			50 (RHD)
D16	A	40 (LHD)	E6		44 (LHD)	a2	D	42 (LHD)
		48 (RHD)			52 (RHD)			50 (RHD)

▭ : **Relay Blocks**

Code	See Page	Relay Blocks (Relay Block Location)
1	24	Engine Room R/B (Engine Compartment Right)

▭ : **Junction Block and Wire Harness Connector**

Code	See Page	Junction Block and Wire Harness (Connector Location)
3B	26	Instrument Panel Wire and Instrument Panel J/B Assembly (Instrument Panel Reinforcement)

▭ : **Connector Joining Wire Harness and Wire Harness**

Code	See Page	Joining Wire Harness and Wire Harness (Connector Location)
AD1	55 (LHD)	Engine Room Main Wire and Instrument Panel Wire (Cowl Side Panel RH)
	59 (RHD)	
AD2	55 (LHD)	Engine Room Main Wire and Instrument Panel Wire (Instrument Panel Reinforcement)
	59 (RHD)	
ED1	55 (LHD)	Front Door Wire LH and Instrument Panel Wire (Cowl Side Panel LH)
	59 (RHD)	
FD1	55 (LHD)	Front Door Wire RH and Instrument Panel Wire (Cowl Side Panel RH)
	59 (RHD)	
GD2	55 (LHD)	No. 1 Floor Wire and Instrument Panel Wire (Cowl Side Panel RH)
	59 (RHD)	
HD1	55 (LHD)	No. 2 Floor Wire and Instrument Panel Wire (Cowl Side Panel LH)
	59 (RHD)	
aD1	55 (LHD)	Instrument Panel Wire Assembly and Instrument Panel Wire (Around A/C Unit)
	59 (RHD)	

▽ : **Ground Points**

Code	See Page	Ground Points Location
D2	55 (LHD)	Instrument Panel Brace LH
	59 (RHD)	Instrument Panel Brace RH

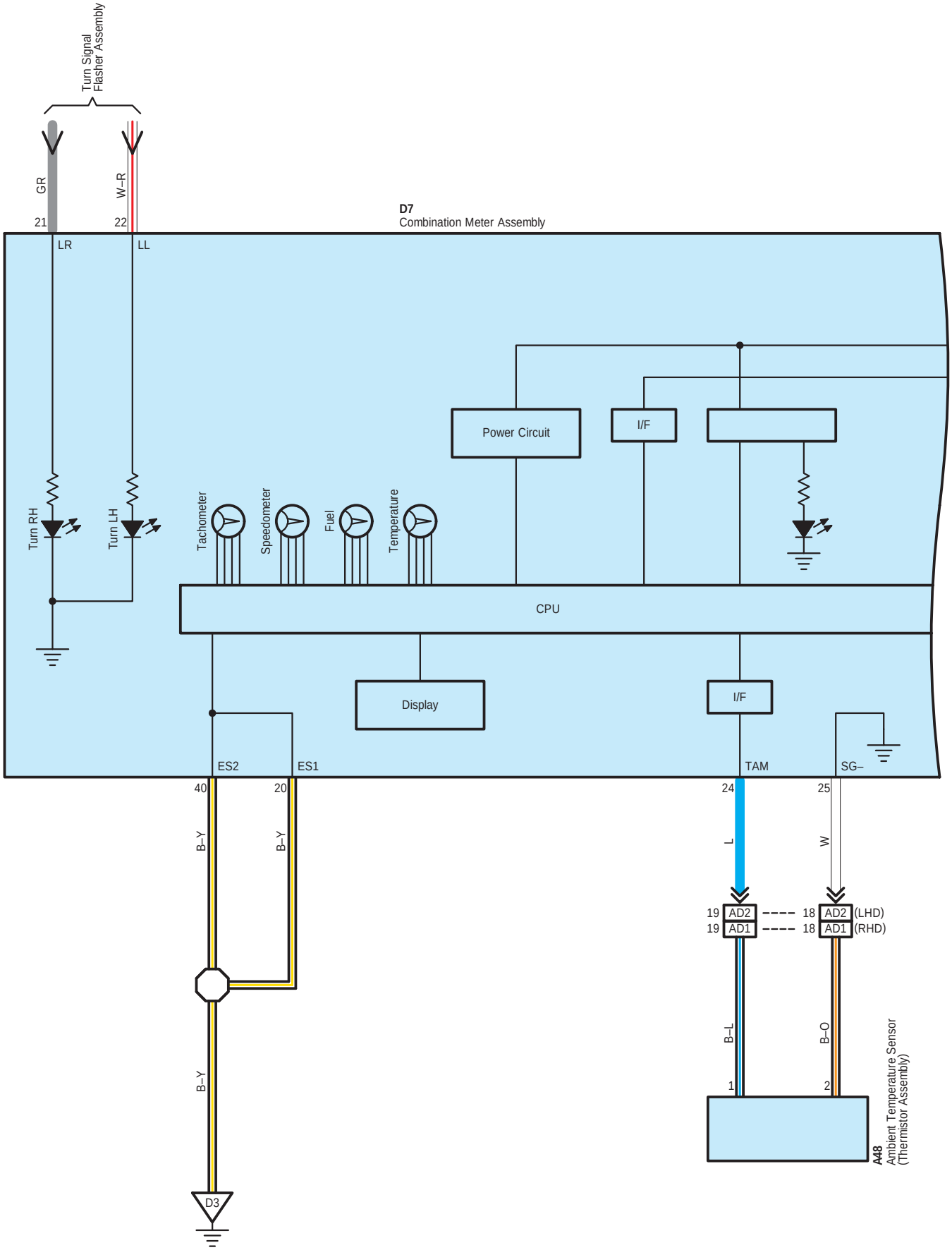
Turn Signal
Flasher Assembly
GR
W–R
21
22
LR
LL
D7
Combination Meter Assembly
Power Circuit
I/F
Turn RH
Turn LH
Tachometer
Speedometer
Fuel
Temperature
CPU
Display
I/F
ES2
ES1
TAM
SG–
40
20
24
25
B–Y
B–Y
L
W
19 AD2
19 AD1
18 AD2 (LHD)
18 AD1 (RHD)
B–L
B–O
1
2
A48
Ambient Temperature Sensor
(Thermistor Assembly)
B–Y
D3

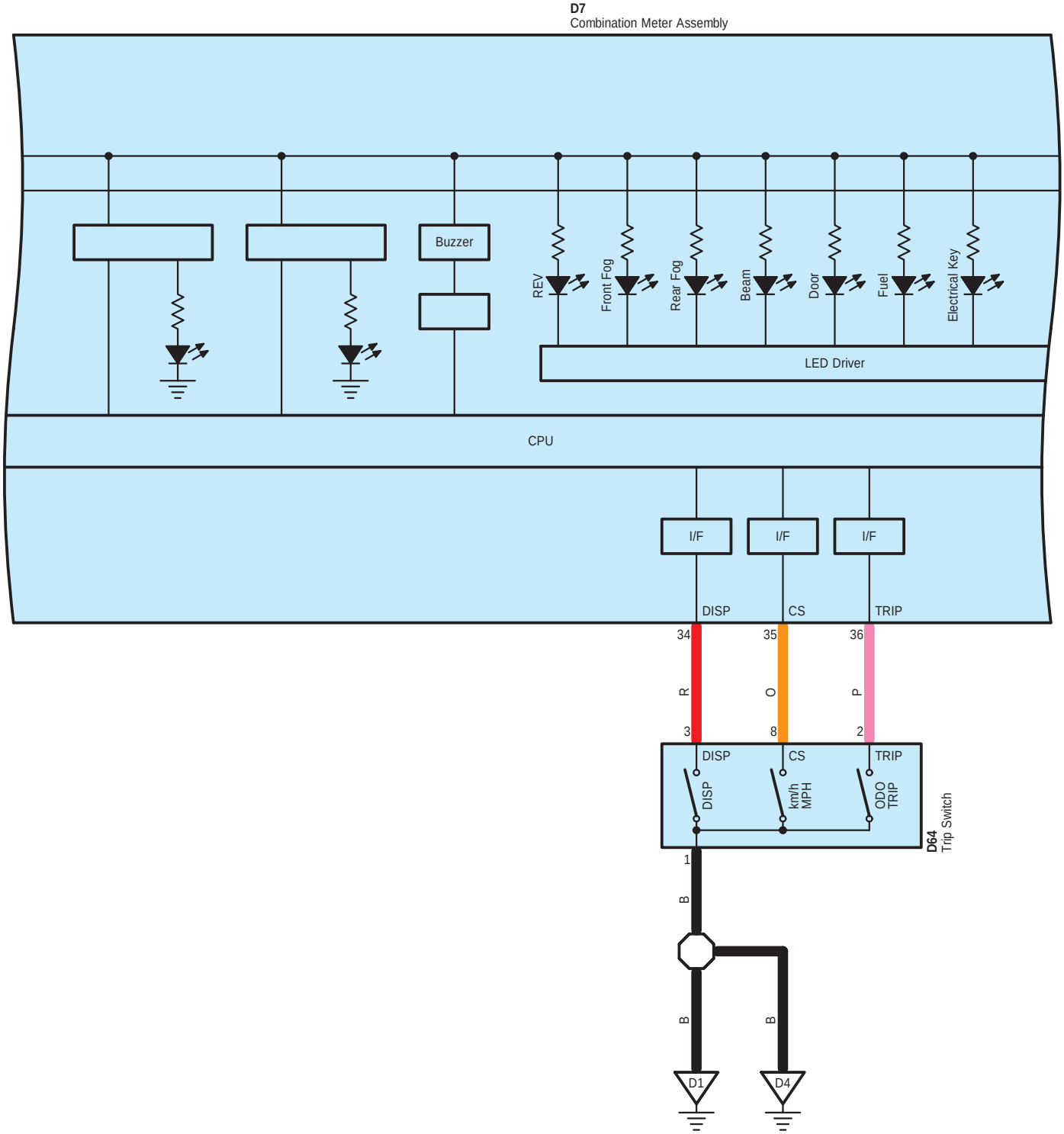
D7
Combination Meter Assembly
Buzzer
REV
Front Fog
Rear Fog
Beam
Door
Fuel
Electrical Key
LED Driver
CPU
I/F
I/F
I/F
DISP
CS
TRIP
34
35
36
R
O
P
3
8
2
DISP
CS
TRIP
DISP
km/h
MPH
ODO
TRIP
D64
Trip Switch
1
B
B
B
D1
D4

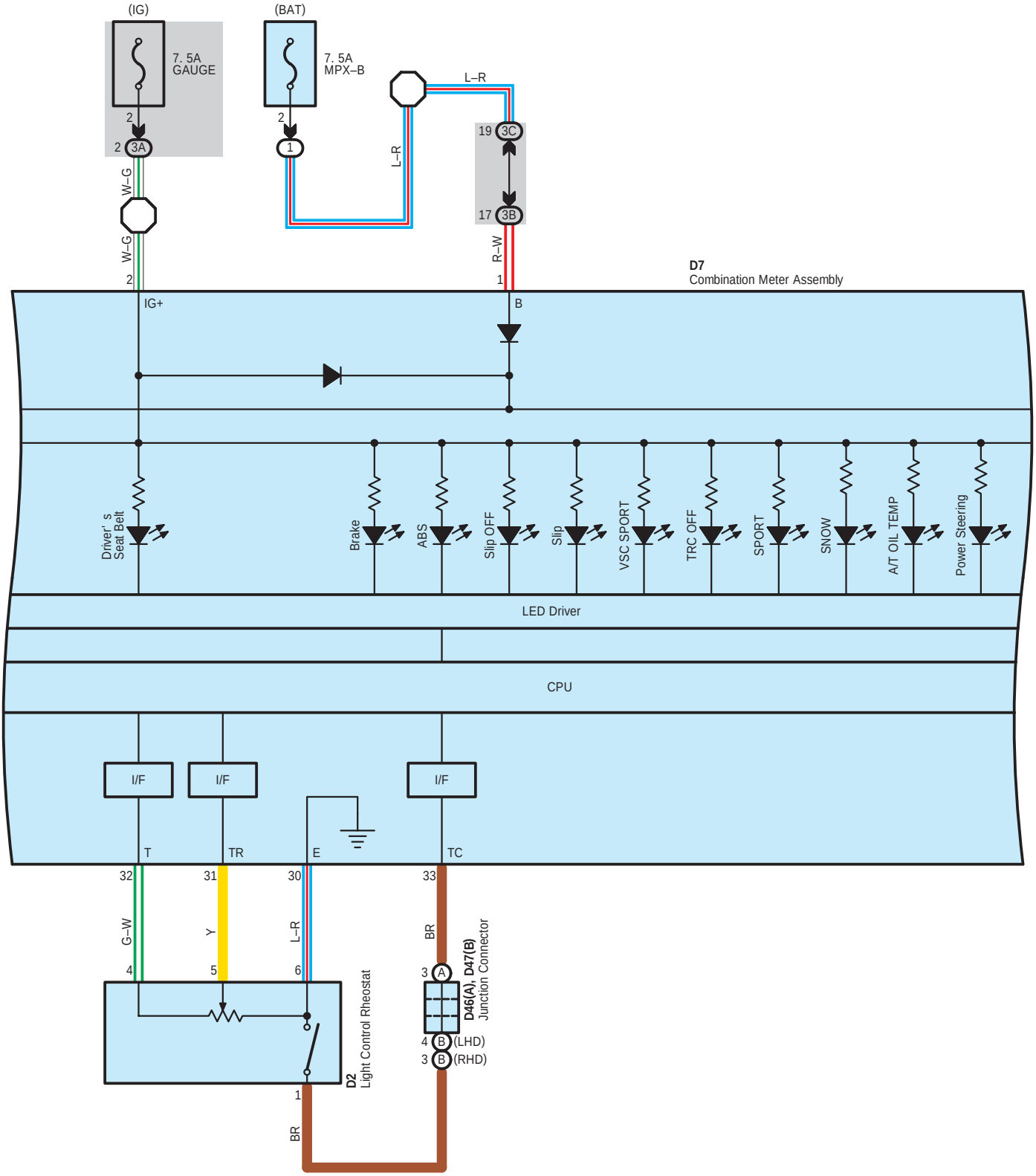
(IG)
7. 5A
GAUGE
(BAT)
7. 5A
MPX–B
L–R
L–R
19 3C
17 3B
2
2 3A
2
1
W–G
W–G
2
R–W
1
D7
Combination Meter Assembly
IG+
B
Driver' s
Seat Belt
Brake
ABS
Slip OFF
Slip
VSC SPORT
TRC OFF
SPORT
SNOW
A/T OIL TEMP
Power Steering
LED Driver
CPU
I/F
I/F
I/F
T
TR
E
TC
32
31
30
33
G–W
Y
L–R
BR
4
5
6
3 A
D46(A), D47(B)
Junction Connector
4 B (LHD)
3 B (RHD)
D2
Light Control Rheostat
1
BR

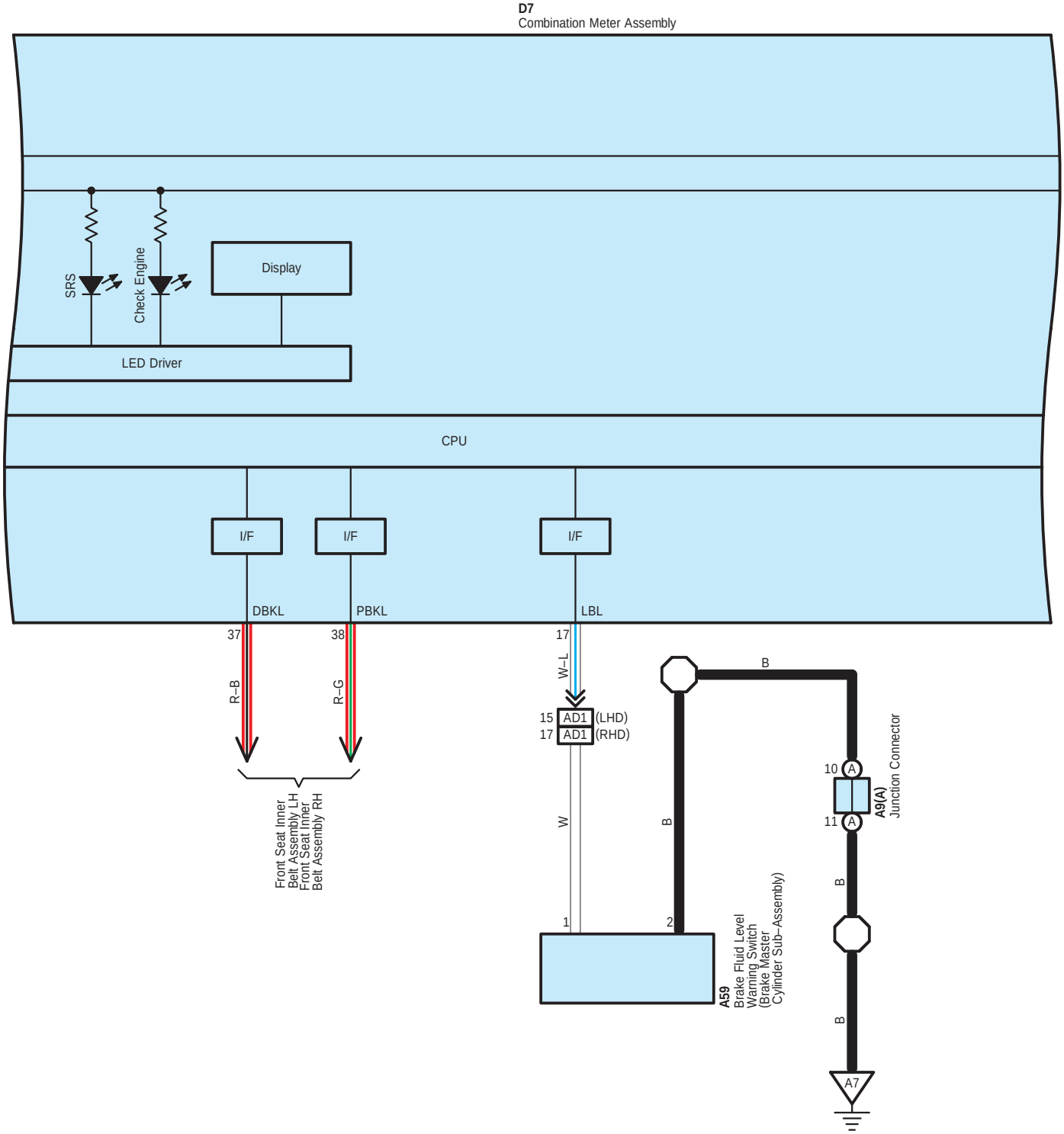
D7
Combination Meter Assembly
SRS
Check Engine
Display
LED Driver
CPU
I/F
I/F
I/F
DBKL
PBKL
LBL
37
38
17
R–B
R–G
W–L
15
17
AD1
AD1
(LHD)
(RHD)
Front Seat Inner Belt Assembly LH
Front Seat Inner Belt Assembly RH
W
B
B
1
2
A59
Brake Fluid Level Warning Switch (Brake Master Cylinder Sub–Assembly)
10
11
A
A
A9(A)
Junction Connector
B
B
A7

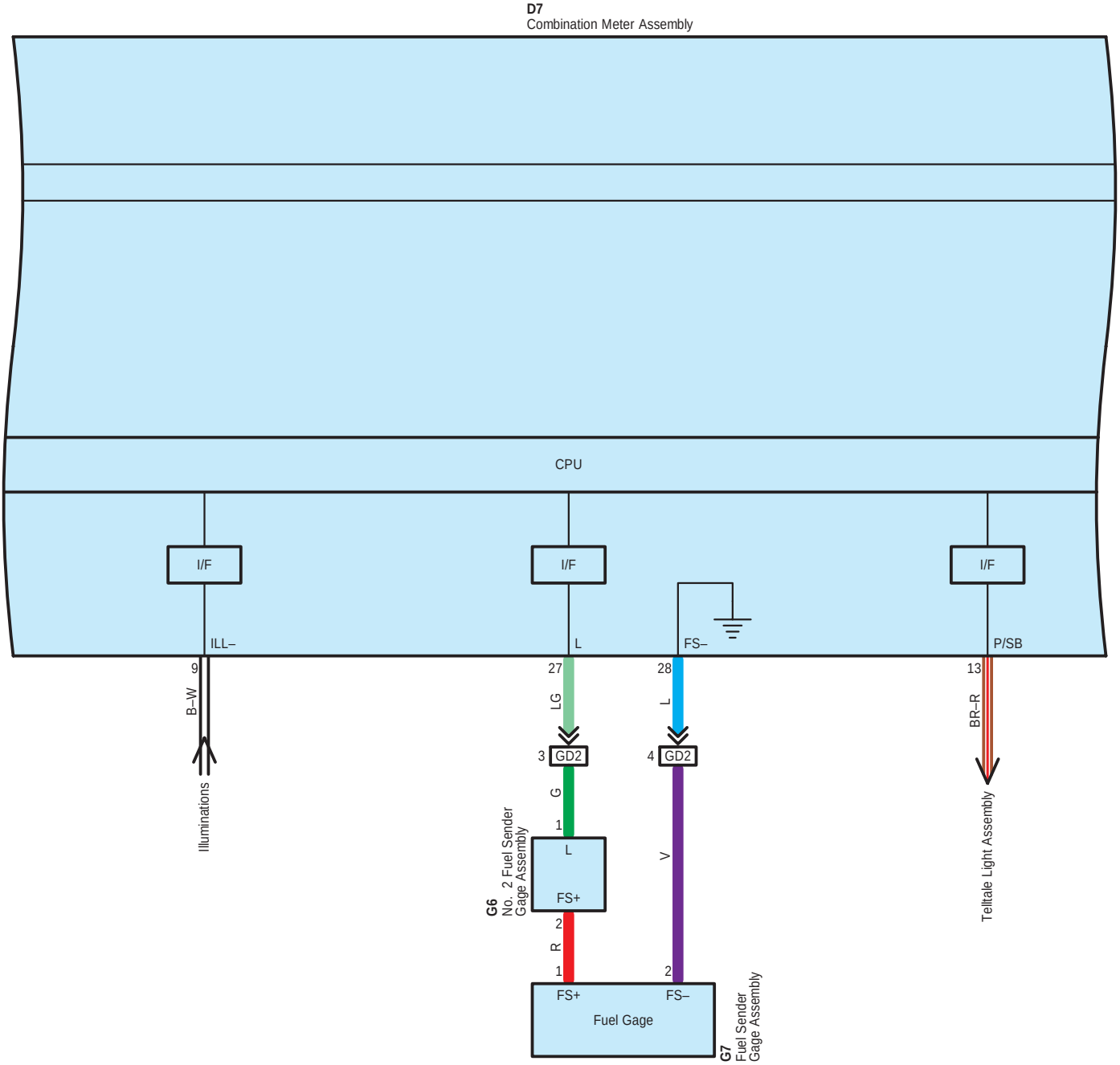
D7
Combination Meter Assembly
CPU
I/F
I/F
I/F
ILL–
L
FS–
P/SB
9
27
28
13
B–W
LG
L
BR–R
3
GD2
4
GD2
G
1
L
FS+
2
R
1
V
2
FS+
FS–
Fuel Gage
Illuminations
G6
No. 2 Fuel Sender
Gage Assembly
G7
Fuel Sender
Gage Assembly
Telltale Light Assembly

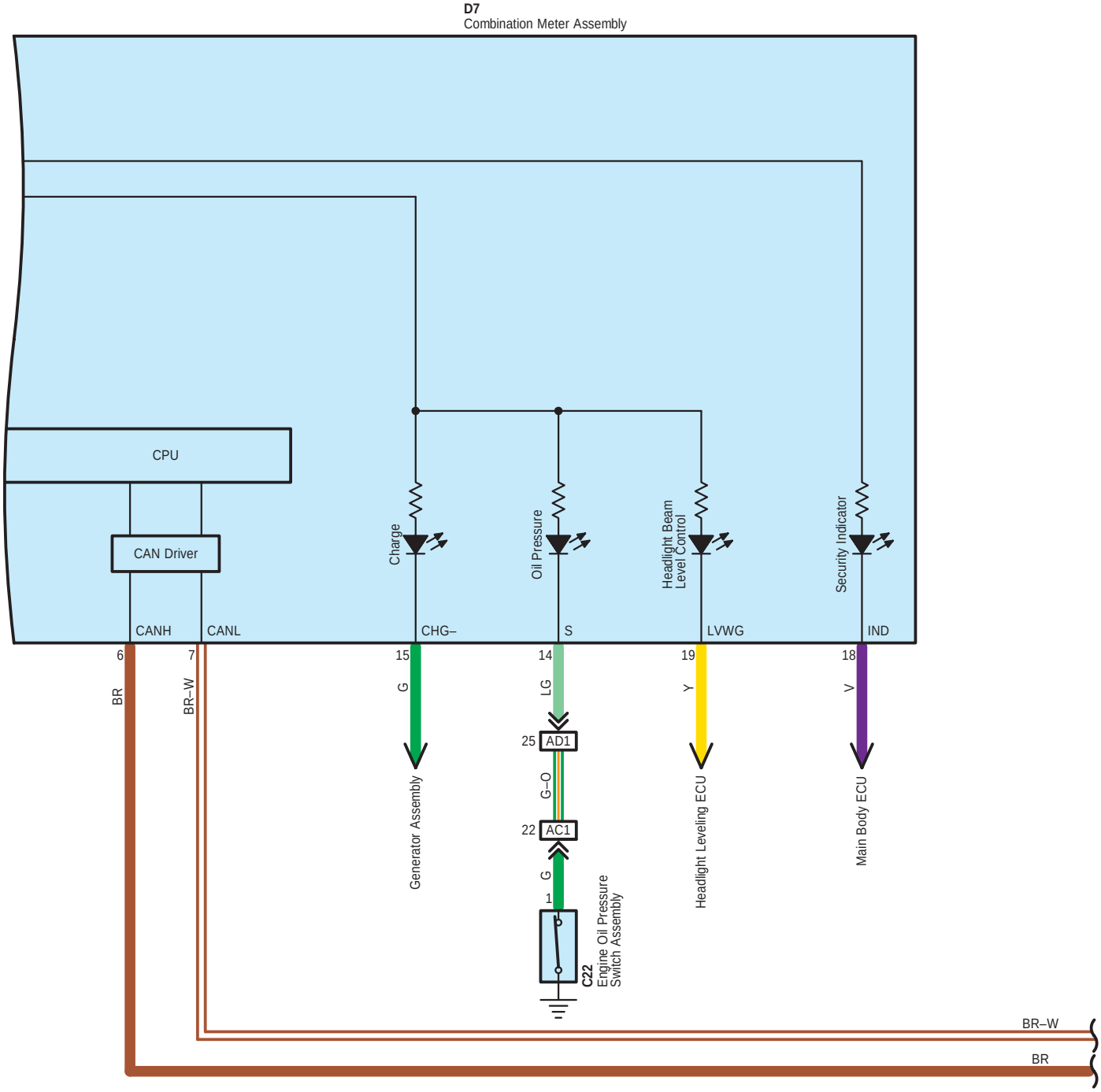
D7
Combination Meter Assembly
CPU
CAN Driver
Charge
Oil Pressure
Headlight Beam Level Control
Security Indicator
CANH
CANL
CHG–
S
LVWG
IND
6
7
15
14
19
18
BR
BR–W
G
LG
Y
V
25
AD1
G–O
22
AC1
G
1
Generator Assembly
Engine Oil Pressure Switch Assembly
C22
Headlight Leveling ECU
Main Body ECU
BR–W
BR

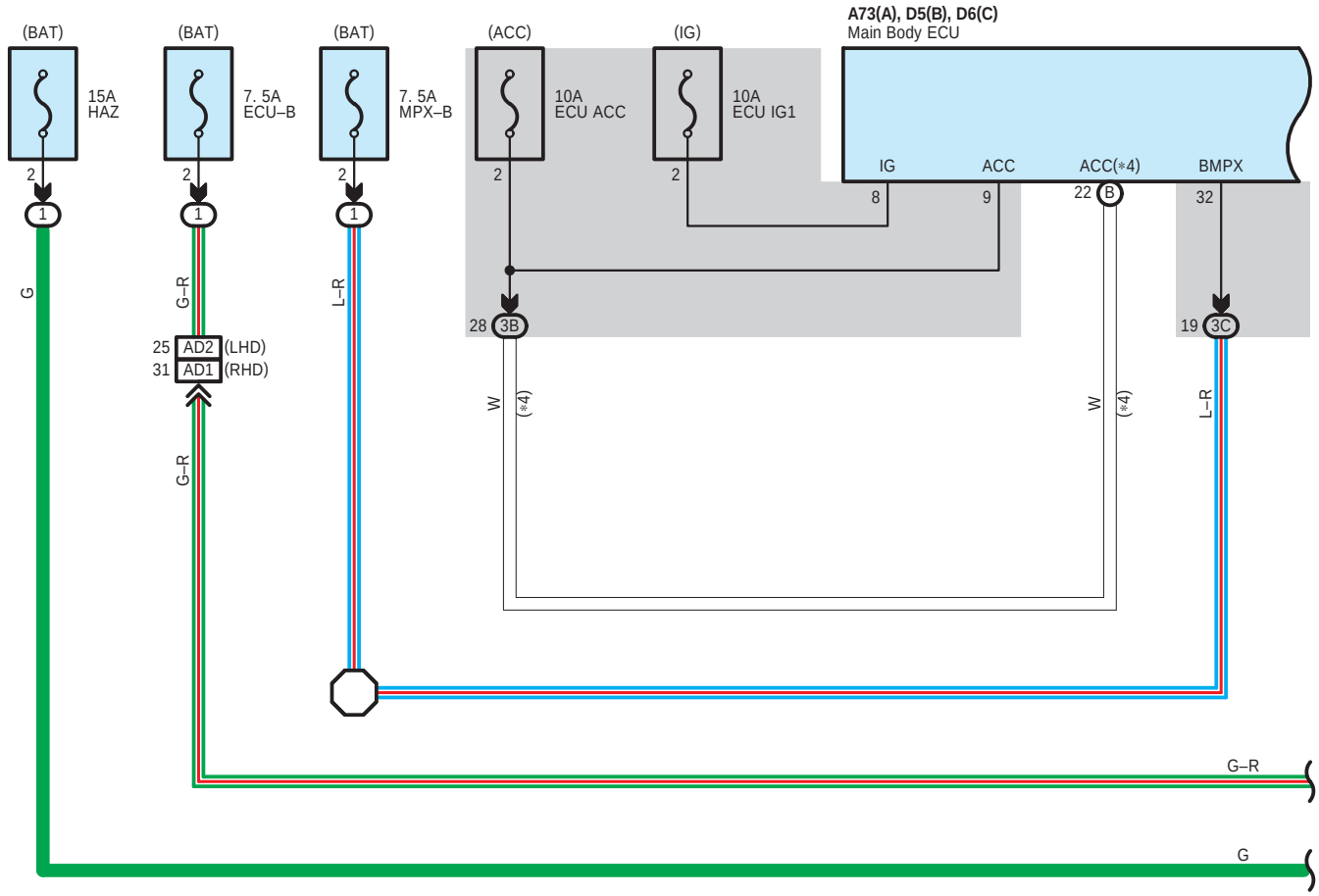
(BAT)
15A
HAZ
(BAT)
7. 5A
ECU–B
(BAT)
7. 5A
MPX–B
(ACC)
10A
ECU ACC
(IG)
10A
ECU IG1
A73(A), D5(B), D6(C)
Main Body ECU
IG
ACC
ACC(*4)
BMPX
G
G–R
L–R
25 AD2 (LHD)
31 AD1 (RHD)
28 3B
19 3C
22 B
W
(*4)
G–R
G

BR–W
BR–W
BR
BR

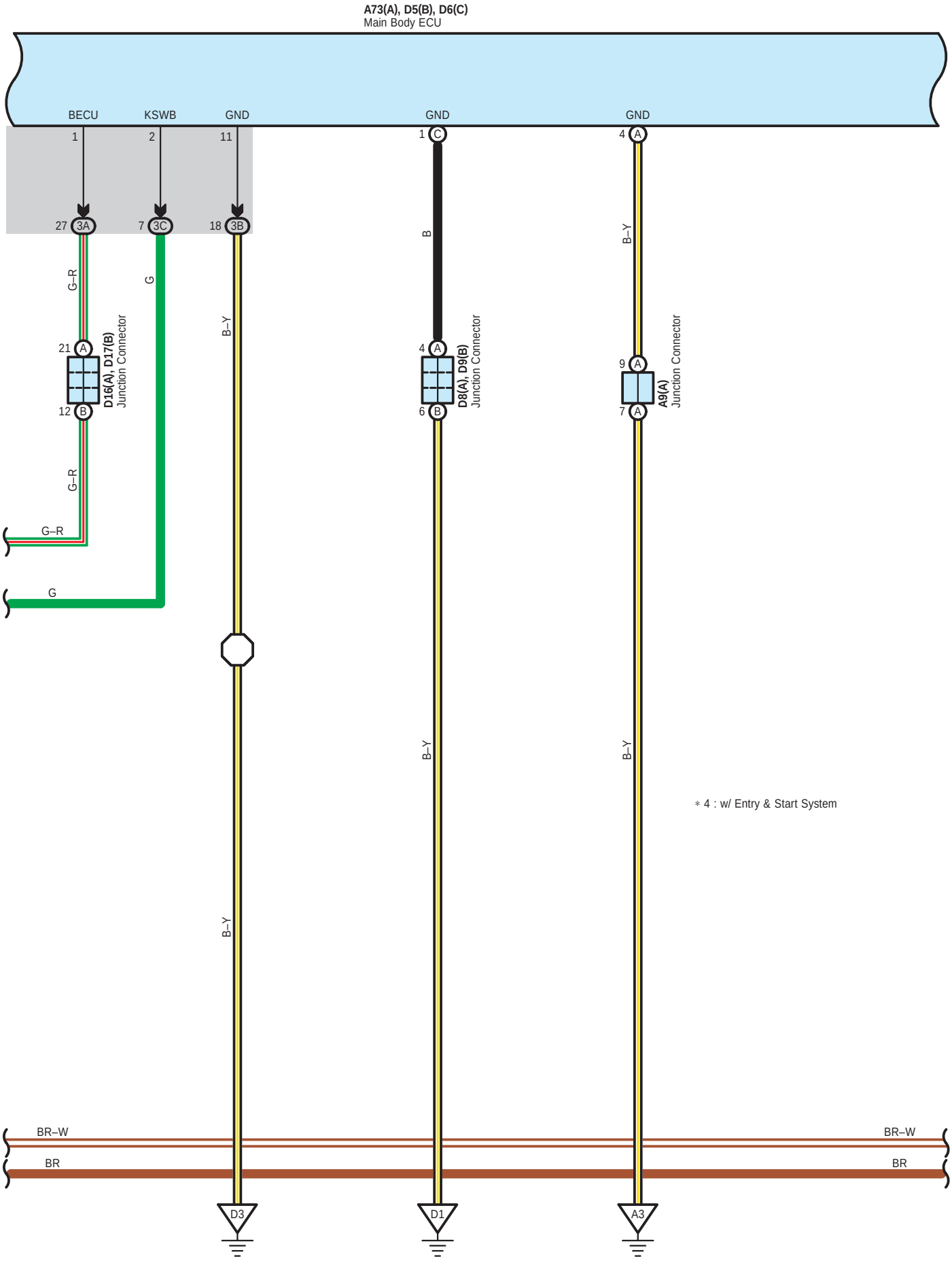

∗ 4 : w/ Entry & Start System

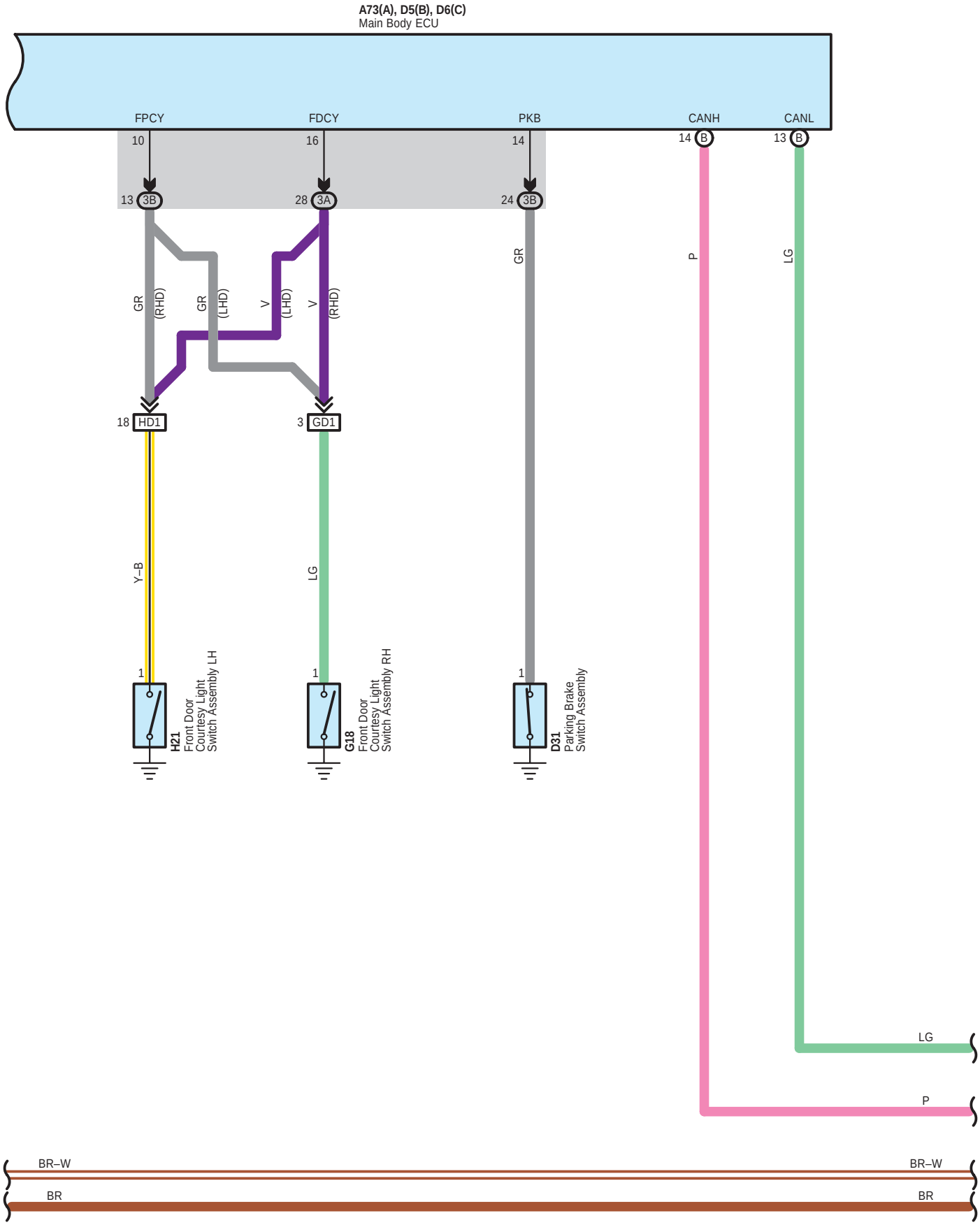
A73(A), D5(B), D6(C)
Main Body ECU
FPCY
FDCY
PKB
CANH
CANL
10
16
14
14 B
13 B
13 3B
28 3A
24 3B
GR (RHD)
GR (LHD)
V (LHD)
V (RHD)
GR
P
LG
18 HD1
3 GD1
Y–B
LG
1
H21
Front Door Courtesy Light Switch Assembly LH
G18
Front Door Courtesy Light Switch Assembly RH
D31
Parking Brake Switch Assembly
LG
P
BR–W
BR

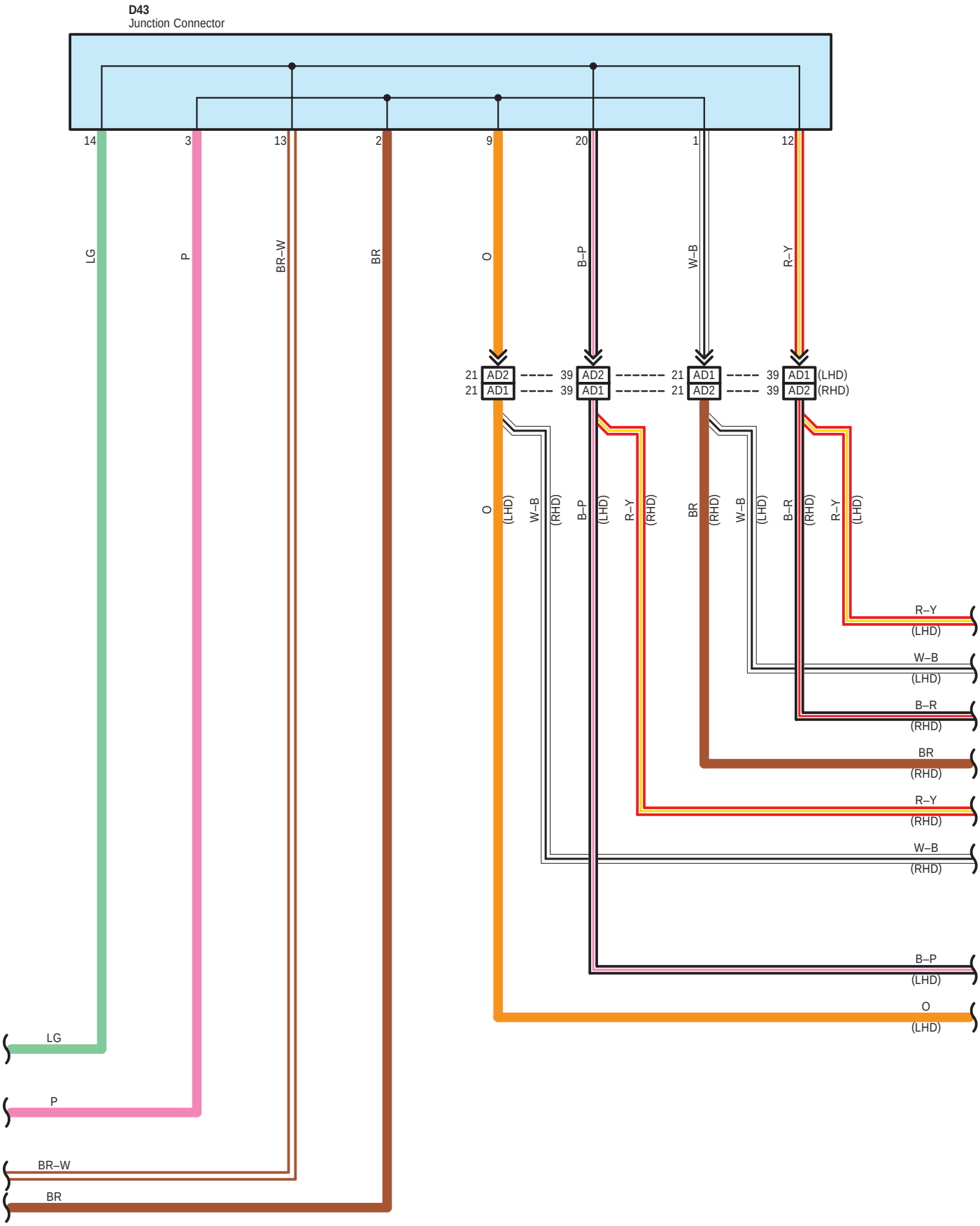
D43
Junction Connector
14
3
13
2
9
20
1
12
LG
P
BR–W
BR
O
B–P
W–B
R–Y
21 AD2
21 AD1
39 AD2
39 AD1
21 AD1
21 AD2
39 AD1 (LHD)
39 AD2 (RHD)
O (LHD)
W–B (RHD)
B–P (LHD)
R–Y (RHD)
BR (RHD)
W–B (LHD)
B–R (RHD)
R–Y (LHD)
R–Y (LHD)
W–B (LHD)
B–R (RHD)
BR (RHD)
R–Y (RHD)
W–B (RHD)
B–P (LHD)
O (LHD)
LG
P
BR–W
BR

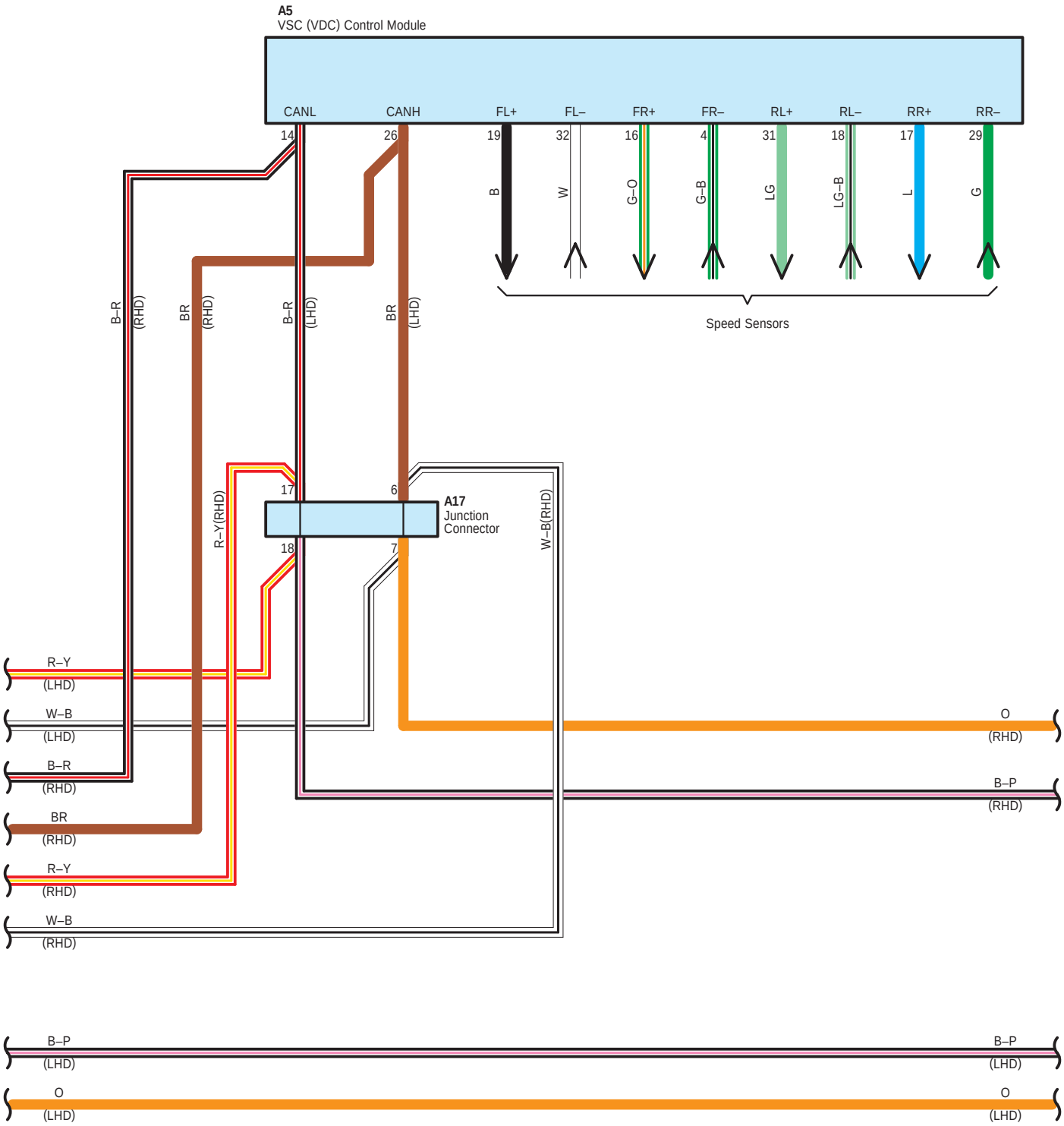
A5
VSC (VDC) Control Module
CANL
CANH
FL+
FL–
FR+
FR–
RL+
RL–
RR+
RR–
14
26
19
32
16
4
31
18
17
29
B
W
G–O
G–B
LG
LG–B
L
G
Speed Sensors
B–R (RHD)
BR (RHD)
B–R (LHD)
BR (LHD)
17
6
18
7
A17
Junction Connector
R–Y(RHD)
W–B(RHD)
R–Y (LHD)
W–B (LHD)
B–R (RHD)
BR (RHD)
R–Y (RHD)
W–B (RHD)
O (RHD)
B–P (RHD)
B–P (LHD)
O (LHD)
B–P (LHD)
O (LHD)

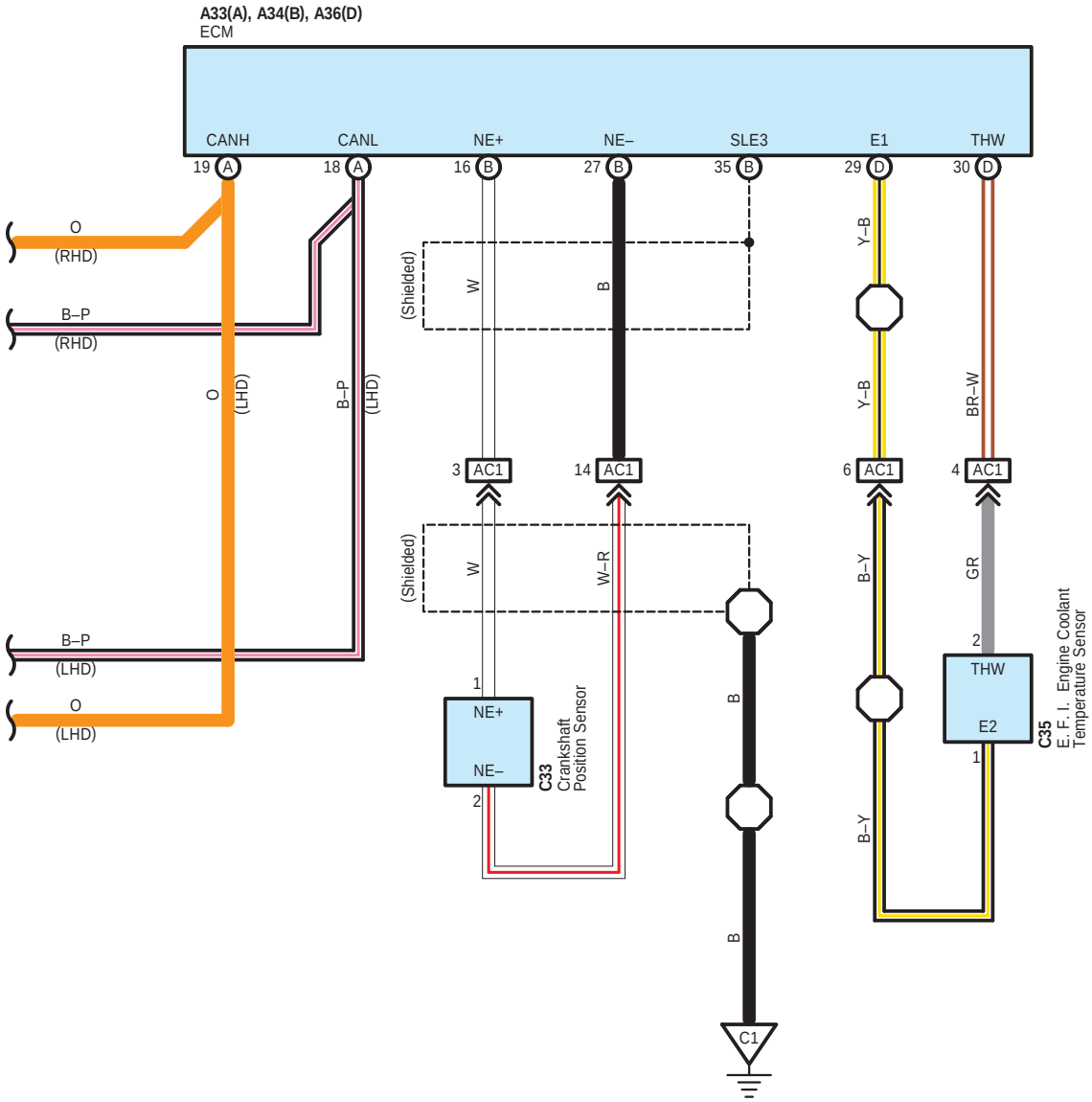
A33(A), A34(B), A36(D)
ECM
CANH
CANL
NE+
NE–
SLE3
E1
THW
19 A
18 A
16 B
27 B
35 B
29 D
30 D
O
(RHD)
B–P
(RHD)
O
(LHD)
B–P
(LHD)
(Shielded)
W
B
Y–B
Y–B
BR–W
3 AC1
14 AC1
6 AC1
4 AC1
(Shielded)
W
W–R
B–Y
GR
B–P
(LHD)
O
(LHD)
1
NE+
NE–
2
C33
Crankshaft
Position Sensor
B
B
C1
2
THW
E2
1
C35
E. F. I. Engine Coolant
Temperature Sensor
B–Y

Combination Meter

○ : **Parts Location**

Code		See Page	Code		See Page	Code		See Page
A5		39 (LHD)	C33		38 (LHD)	D31		40 (LHD)
		47 (RHD)			46 (RHD)			48 (RHD)
A9	A	42 (LHD)	C35		38 (LHD)	D43		41 (LHD)
		50 (RHD)			46 (RHD)			49 (RHD)
A17		42 (LHD)	D2		40 (LHD)	D46	A	41 (LHD)
		50 (RHD)			48 (RHD)			49 (RHD)
A33	A	42 (LHD)	D5	B	40 (LHD)	D47	B	41 (LHD)
		50 (RHD)			48 (RHD)			49 (RHD)
A34	B	42 (LHD)	D6	C	40 (LHD)	D64		41 (LHD)
		50 (RHD)			48 (RHD)			49 (RHD)
A36	D	42 (LHD)	D7		40 (LHD)	G6		44 (LHD)
		50 (RHD)			48 (RHD)			52 (RHD)
A48		39 (LHD)	D8	A	40 (LHD)	G7		44 (LHD)
		47 (RHD)			48 (RHD)			52 (RHD)
A59		39 (LHD)	D9	B	40 (LHD)	G18		44 (LHD)
		47 (RHD)			48 (RHD)			52 (RHD)
A73	A	42 (LHD)	D16	A	40 (LHD)	H21		45 (LHD)
		50 (RHD)			48 (RHD)			53 (RHD)
C22		38 (LHD)	D17	B	40 (LHD)			
		46 (RHD)			48 (RHD)			

: Relay Blocks

Code	See Page	Relay Blocks (Relay Block Location)
1	24	Engine Room R/B (Engine Compartment Right)

: Junction Block and Wire Harness Connector

Code	See Page	Junction Block and Wire Harness (Connector Location)
3A	26	Instrument Panel Wire and Instrument Panel J/B Assembly (Instrument Panel Reinforcement)
3B		
3C	26	Engine Room Main Wire and Instrument Panel J/B Assembly (Instrument Panel Reinforcement)

: Connector Joining Wire Harness and Wire Harness

Code	See Page	Joining Wire Harness and Wire Harness (Connector Location)
AC1	54 (LHD)	Engine Room Main Wire and Engine Wire (Engine Unit)
	58 (RHD)	
AD1	55 (LHD)	Engine Room Main Wire and Instrument Panel Wire (Cowl Side Panel RH)
	59 (RHD)	
AD2	55 (LHD)	Engine Room Main Wire and Instrument Panel Wire (Instrument Panel Reinforcement)
	59 (RHD)	
GD1	55 (LHD)	No. 1 Floor Wire and Instrument Panel Wire (Cowl Side Panel RH)
	59 (RHD)	
GD2	55 (LHD)	
	59 (RHD)	
HD1	55 (LHD)	No. 2 Floor Wire and Instrument Panel Wire (Cowl Side Panel LH)
	59 (RHD)	

: Ground Points

Code	See Page	Ground Points Location
A3	55 (LHD)	Cowl Side Panel RH
	59 (RHD)	Cowl Side Panel LH
A7	54 (LHD)	Front Fender Apron RH
	58 (RHD)	
C1	54 (LHD)	Engine Unit
	58 (RHD)	
D1	55 (LHD)	Cowl Side Panel LH
	59 (RHD)	Cowl Side Panel RH

▽ : **Ground Points**

Code	See Page	Ground Points Location
D3	55 (LHD)	Instrument Panel Brace RH
	59 (RHD)	Instrument Panel Brace LH
D4	55 (LHD)	Cowl Side Panel RH
	59 (RHD)	Cowl Side Panel LH

Cooling Fan

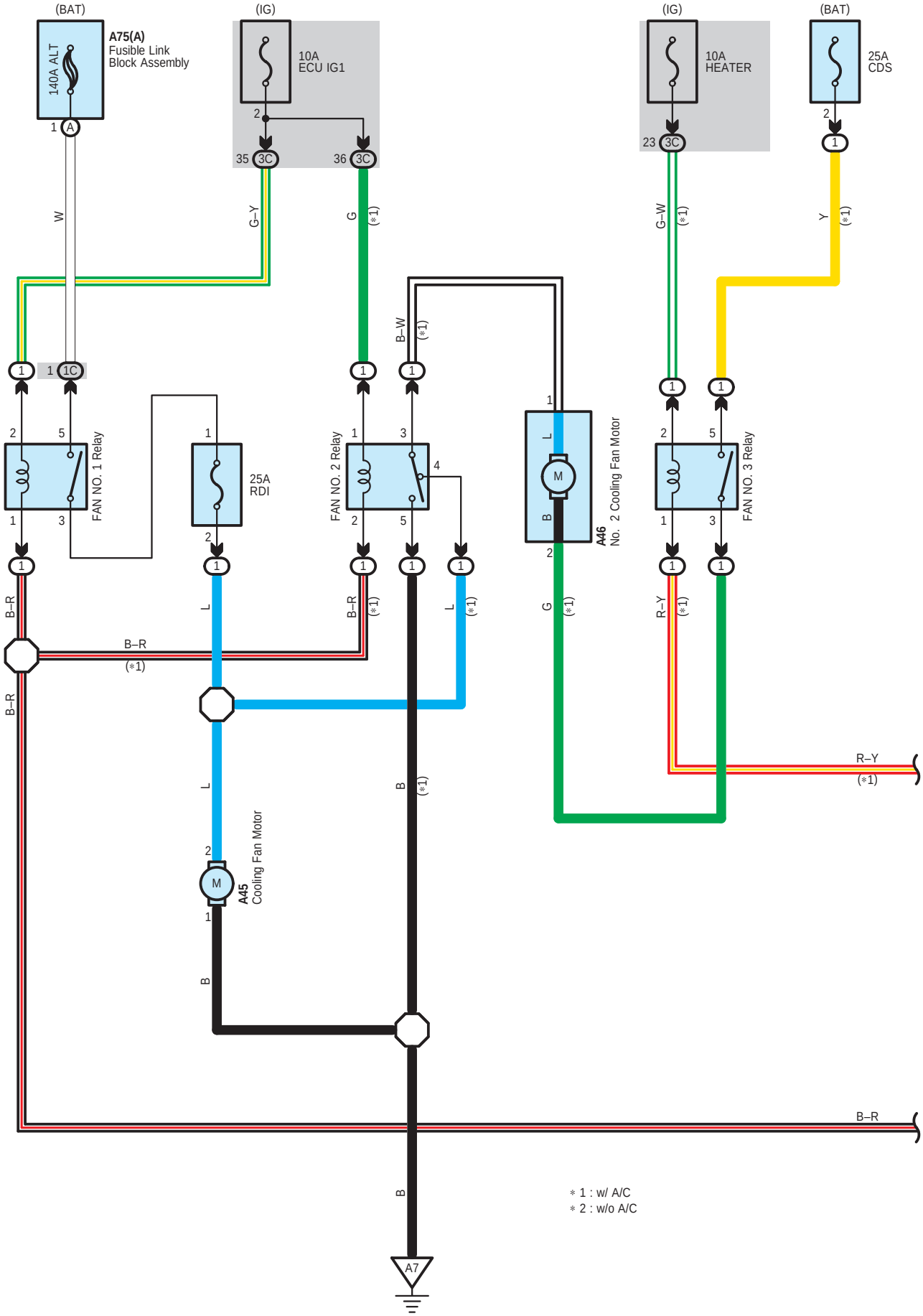
(BAT)
140A ALT
A75(A)
Fusible Link
Block Assembly
(IG)
10A
ECU IG1
(IG)
10A
HEATER
(BAT)
25A
CDS
FAN NO. 1 Relay
25A
RDI
FAN NO. 2 Relay
A46
No. 2 Cooling Fan Motor
FAN NO. 3 Relay
A45
Cooling Fan Motor
A7
W
G–Y
G
B–W
G–W
Y
B–R
L
B
R–Y
(*1)
* 1 : w/ A/C
* 2 : w/o A/C

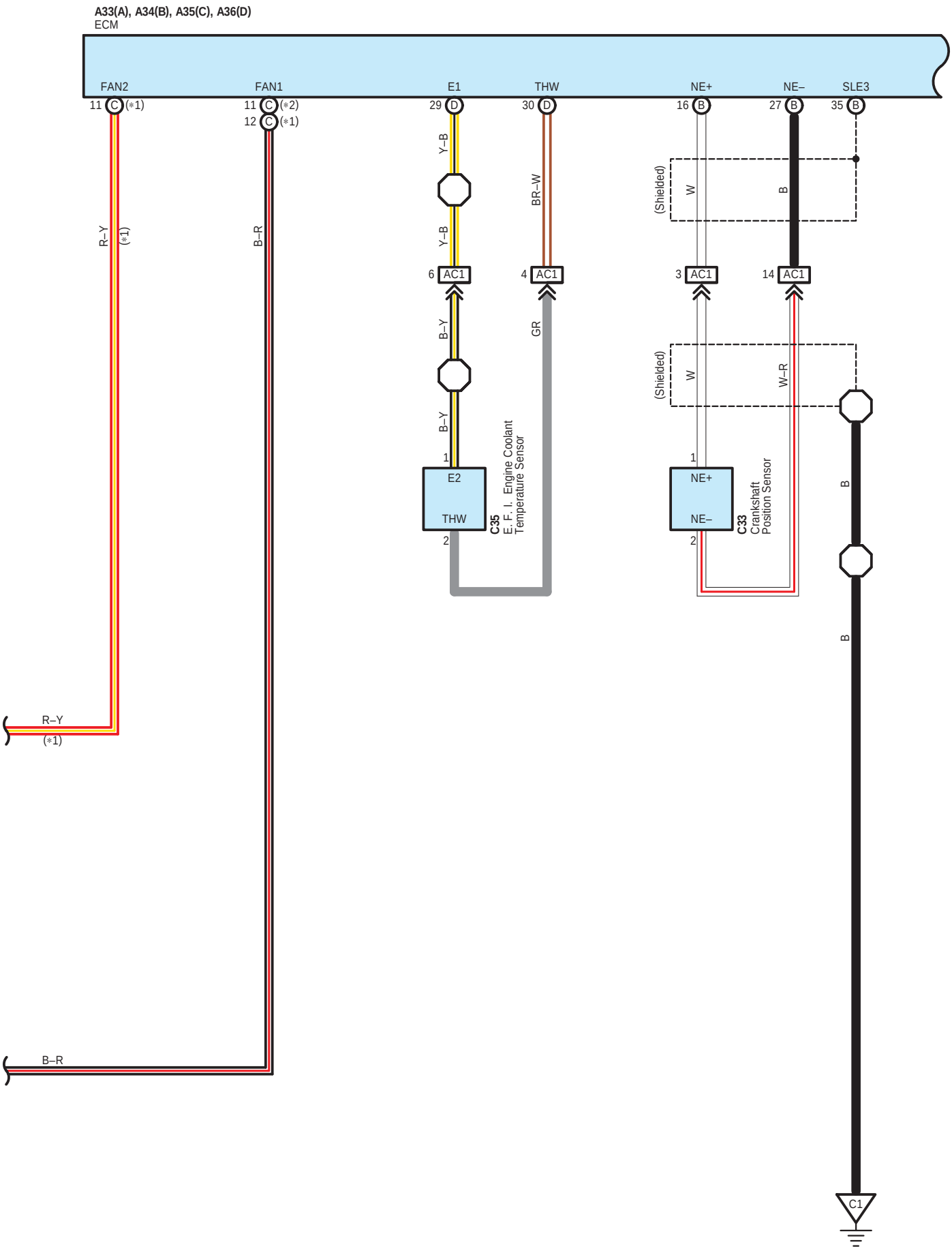
A33(A), A34(B), A35(C), A36(D)
ECM
FAN2
FAN1
E1
THW
NE+
NE–
SLE3
11 C (*1)
11 C (*2)
12 C (*1)
29 D
30 D
16 B
27 B
35 B
R–Y
(*1)
B–R
Y–B
Y–B
BR–W
(Shielded)
W
B
6 AC1
4 AC1
3 AC1
14 AC1
B–Y
B–Y
GR
(Shielded)
W
W–R
1
E2
THW
2
C35
E. F. I. Engine Coolant Temperature Sensor
1
NE+
NE–
2
C33
Crankshaft Position Sensor
B
B
R–Y
(*1)
B–R
C1

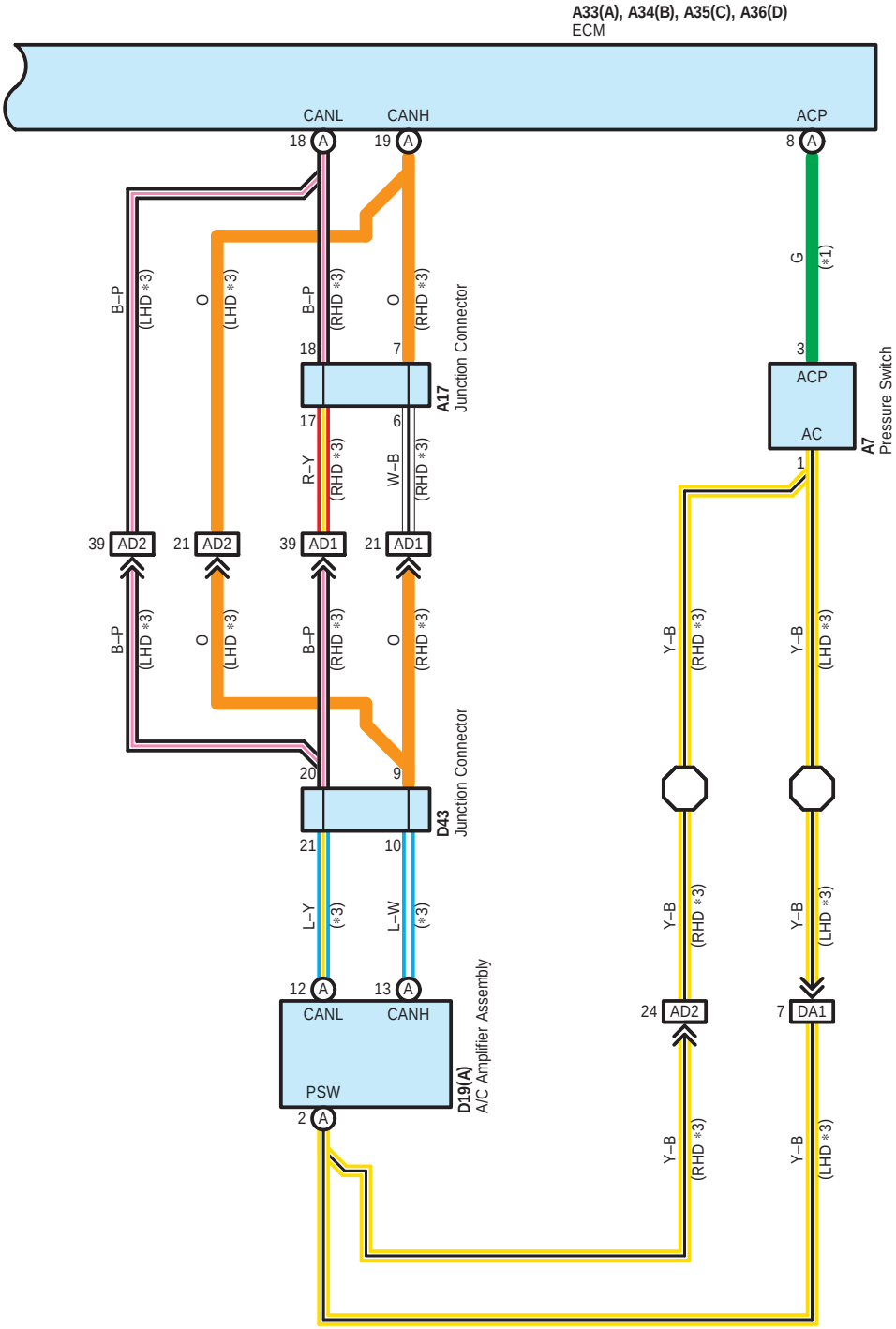

* 1 : w/ A/C
* 3 : Automatic A/C

○ : **Parts Location**

Code		See Page	Code		See Page	Code		See Page
A7		39 (LHD)	A36	D	42 (LHD)	C33		46 (RHD)
		47 (RHD)			50 (RHD)	C35		38 (LHD)
A17		50 (RHD)	A45		39 (LHD)			46 (RHD)
A33	A	42 (LHD)			47 (RHD)	D19	A	40 (LHD)
		50 (RHD)	A46		39 (LHD)			48 (RHD)
A34	B	42 (LHD)			47 (RHD)	D43		41 (LHD)
		50 (RHD)	A75	A	39 (LHD)			49 (RHD)
A35	C	42 (LHD)			47 (RHD)			
		50 (RHD)	C33		38 (LHD)			

: **Relay Blocks**

Code	See Page	Relay Blocks (Relay Block Location)
1	24	Engine Room R/B (Engine Compartment Right)

: **Junction Block and Wire Harness Connector**

Code	See Page	Junction Block and Wire Harness (Connector Location)
1C	24	Engine Room Main Wire and Engine Room J/B (Engine Compartment Right)
3C	26	Engine Room Main Wire and Instrument Panel J/B Assembly (Instrument Panel Reinforcement)

: **Connector Joining Wire Harness and Wire Harness**

Code	See Page	Joining Wire Harness and Wire Harness (Connector Location)
AC1	54 (LHD)	Engine Room Main Wire and Engine Wire (Engine Unit)
	58 (RHD)	
AD1	59 (RHD)	Engine Room Main Wire and Instrument Panel Wire (Cowl Side Panel RH)
AD2	55 (LHD)	Engine Room Main Wire and Instrument Panel Wire (Instrument Panel Reinforcement)
	59 (RHD)	
DA1	55 (LHD)	Instrument Panel Wire and Engine Room Main Wire (Behind Glove Box)

: **Ground Points**

Code	See Page	Ground Points Location
A7	54 (LHD)	Front Fender Apron RH
	58 (RHD)	
C1	54 (LHD)	Engine Unit
	58 (RHD)	

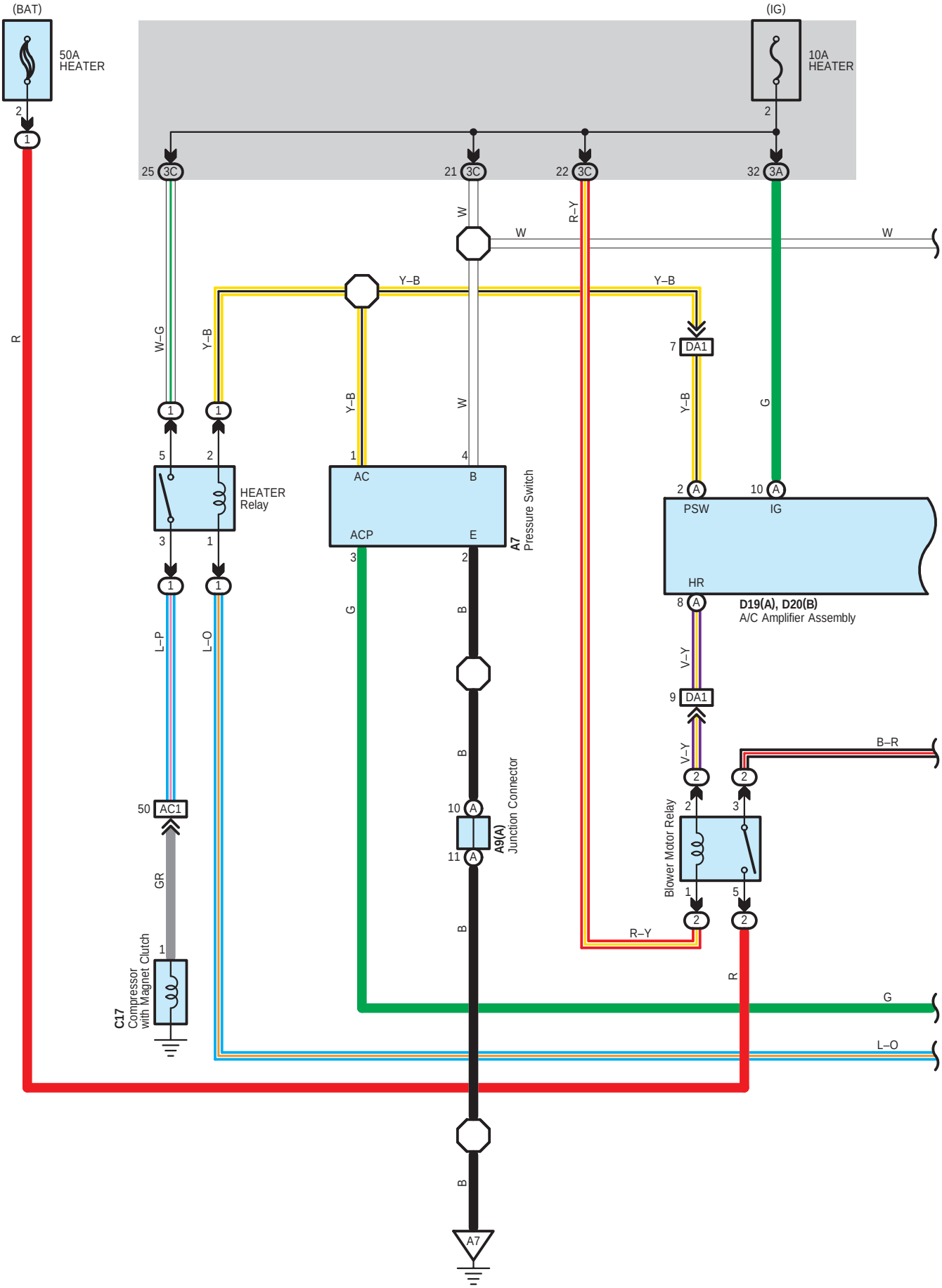
(BAT)
50A
HEATER
(IG)
10A
HEATER
25 3C
21 3C
22 3C
32 3A
R
W–G
Y–B
W
R–Y
G
L–P
L–O
GR
B–R
V–Y
HEATER
Relay
AC
ACP
B
E
A7
Pressure Switch
PSW
IG
HR
D19(A), D20(B)
A/C Amplifier Assembly
DA1
AC1
A9(A)
Junction Connector
Blower Motor Relay
C17
Compressor
with Magnet Clutch
A7

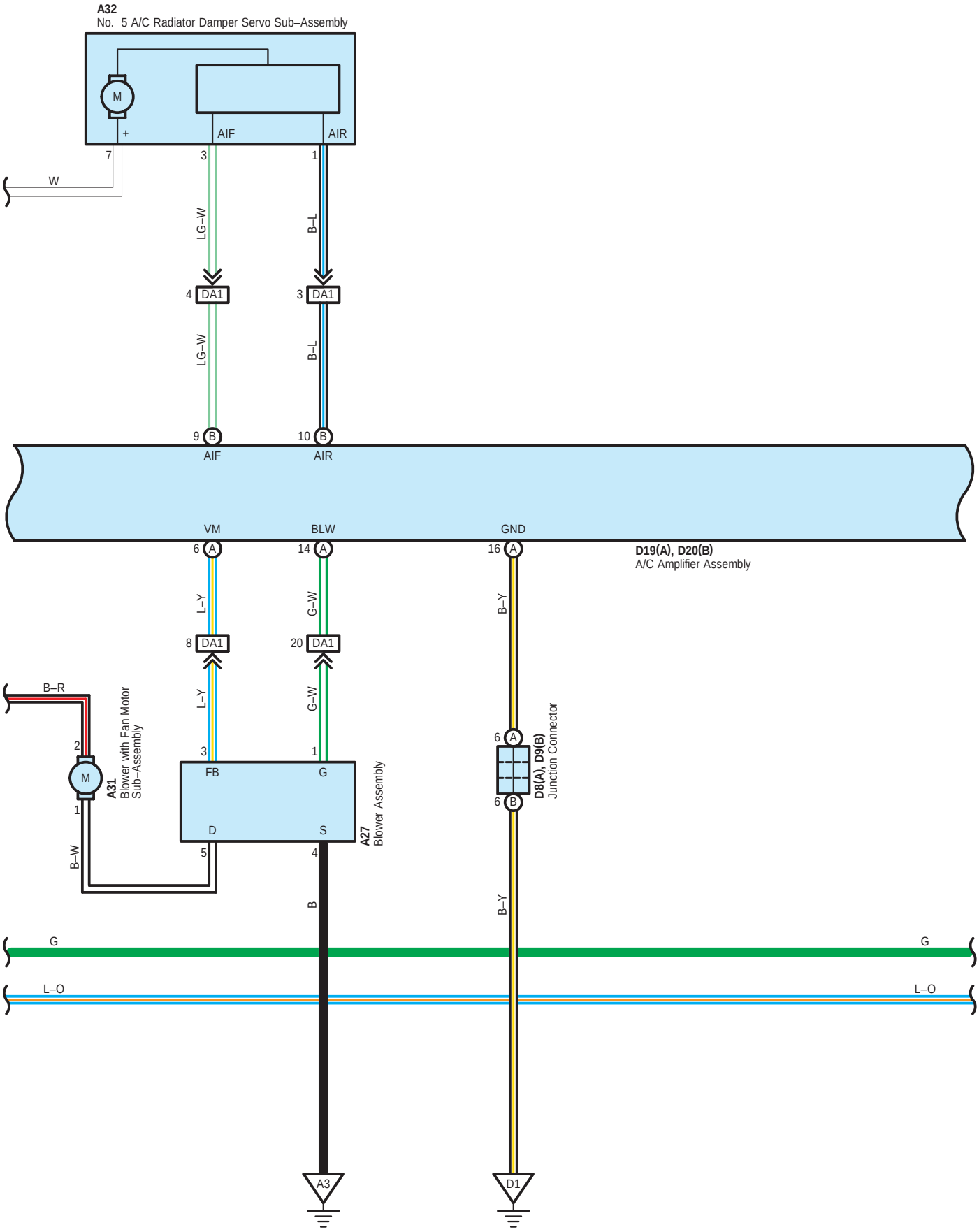
A32
No. 5 A/C Radiator Damper Servo Sub–Assembly
M
+
AIF
AIR
7
3
1
W
LG–W
B–L
4 DA1
3 DA1
LG–W
B–L
9 B
10 B
AIF
AIR
VM
BLW
GND
6 A
14 A
16 A
D19(A), D20(B)
A/C Amplifier Assembly
L–Y
G–W
B–Y
8 DA1
20 DA1
B–R
L–Y
G–W
2
M
1
A31
Blower with Fan Motor
Sub–Assembly
3
FB
1
G
D
S
5
4
A27
Blower Assembly
B–W
B
6 A
6 B
D8(A), D9(B)
Junction Connector
B–Y
G
G
L–O
L–O
A3
D1

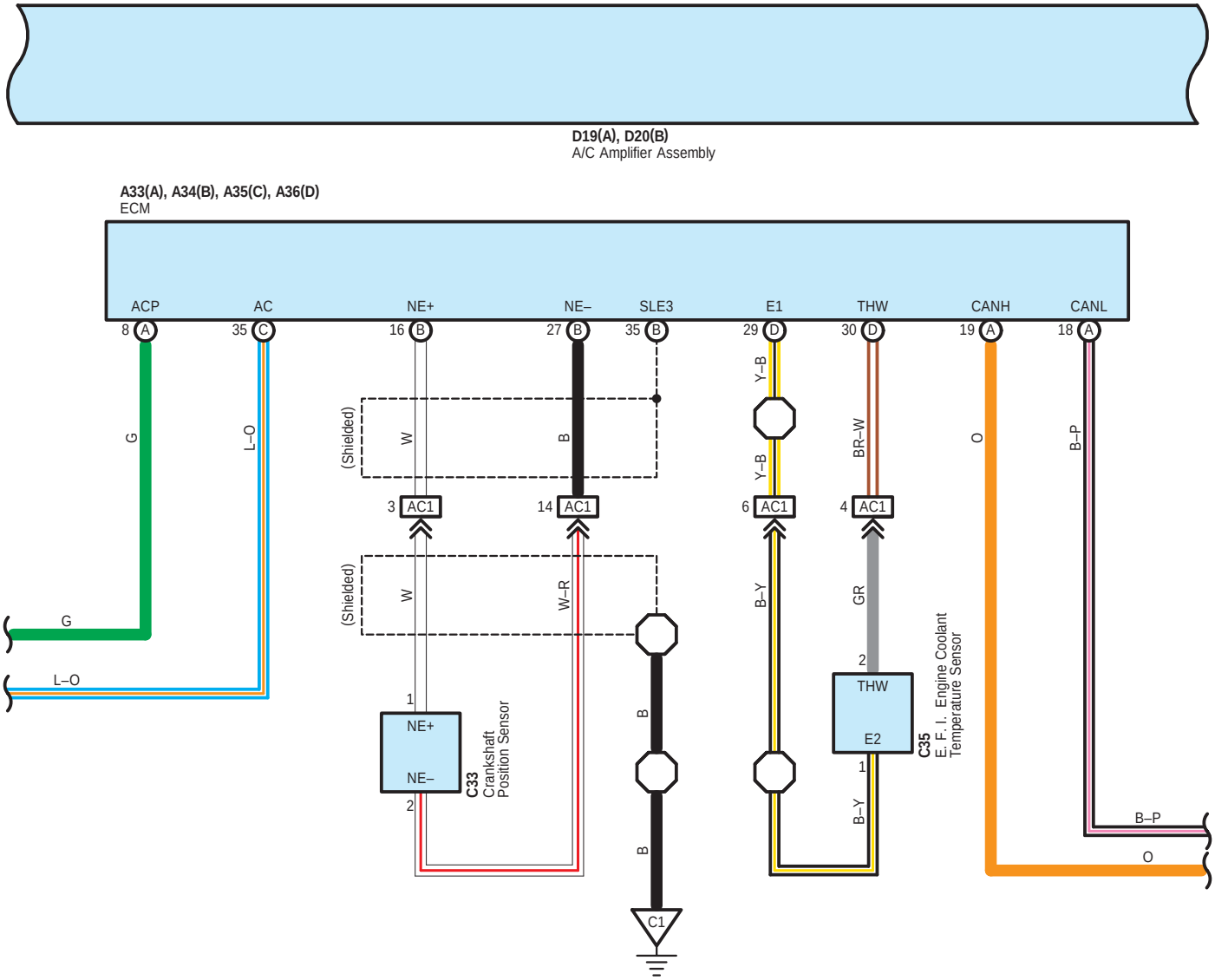
D19(A), D20(B)
A/C Amplifier Assembly
A33(A), A34(B), A35(C), A36(D)
ECM
ACP
AC
NE+
NE–
SLE3
E1
THW
CANH
CANL
8 A
35 C
16 B
27 B
35 B
29 D
30 D
19 A
18 A
G
L–O
(Shielded)
W
B
Y–B
BR–W
O
B–P
3 AC1
14 AC1
6 AC1
4 AC1
W–R
B–Y
GR
1
2
NE+
NE–
C33
Crankshaft
Position Sensor
THW
E2
C35
E. F. I. Engine Coolant
Temperature Sensor
C1

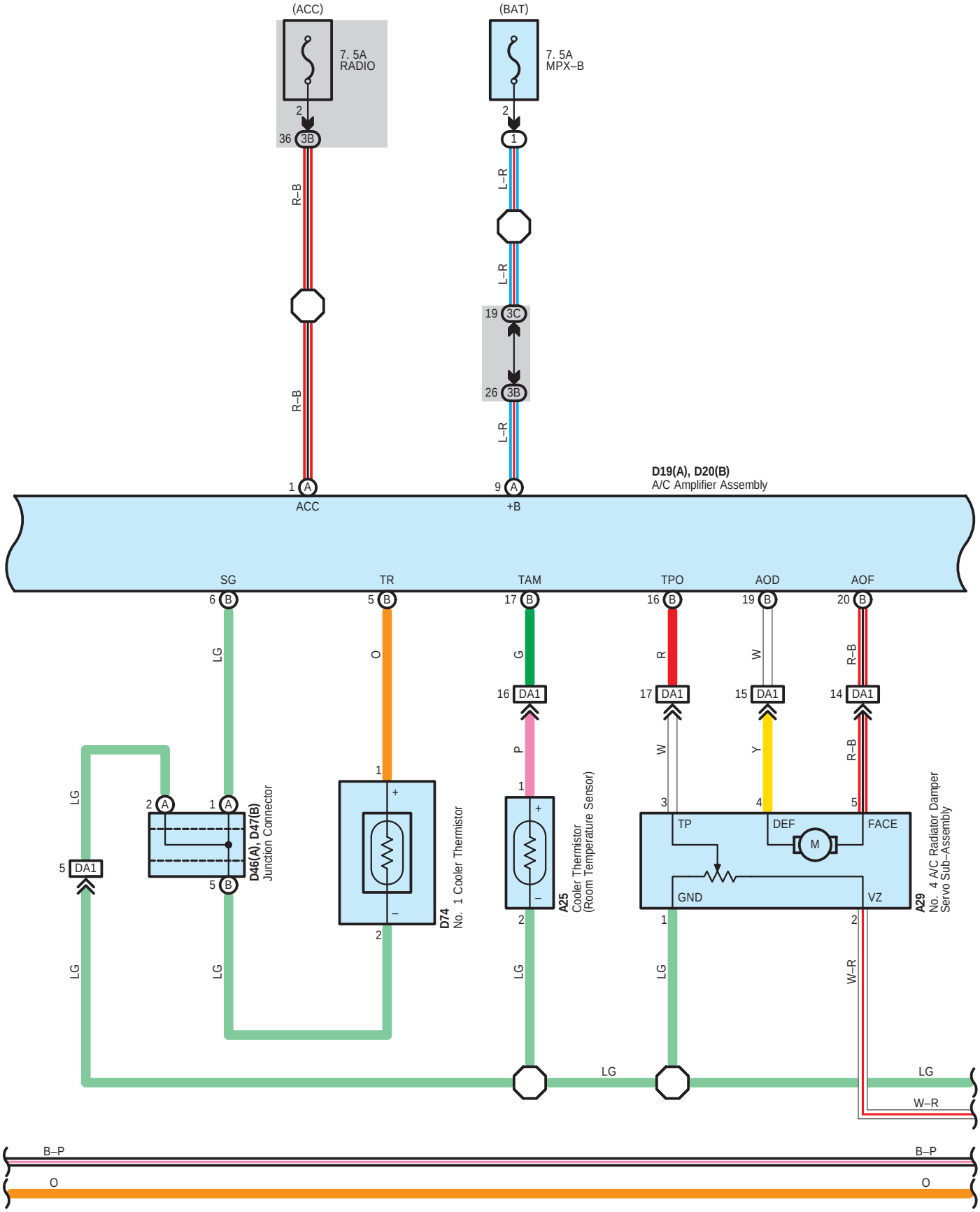
(ACC)
7. 5A
RADIO
(BAT)
7. 5A
MPX–B
R–B
L–R
D19(A), D20(B)
A/C Amplifier Assembly
ACC
+B
SG
TR
TAM
TPO
AOD
AOF
LG
O
G
R
W
Y
P
W–R
DA1
D46(A), D47(B)
Junction Connector
D74
No. 1 Cooler Thermistor
A25
Cooler Thermistor
(Room Temperature Sensor)
A29
No. 4 A/C Radiator Damper
Servo Sub–Assembly
TP
DEF
FACE
GND
VZ
M
B–P

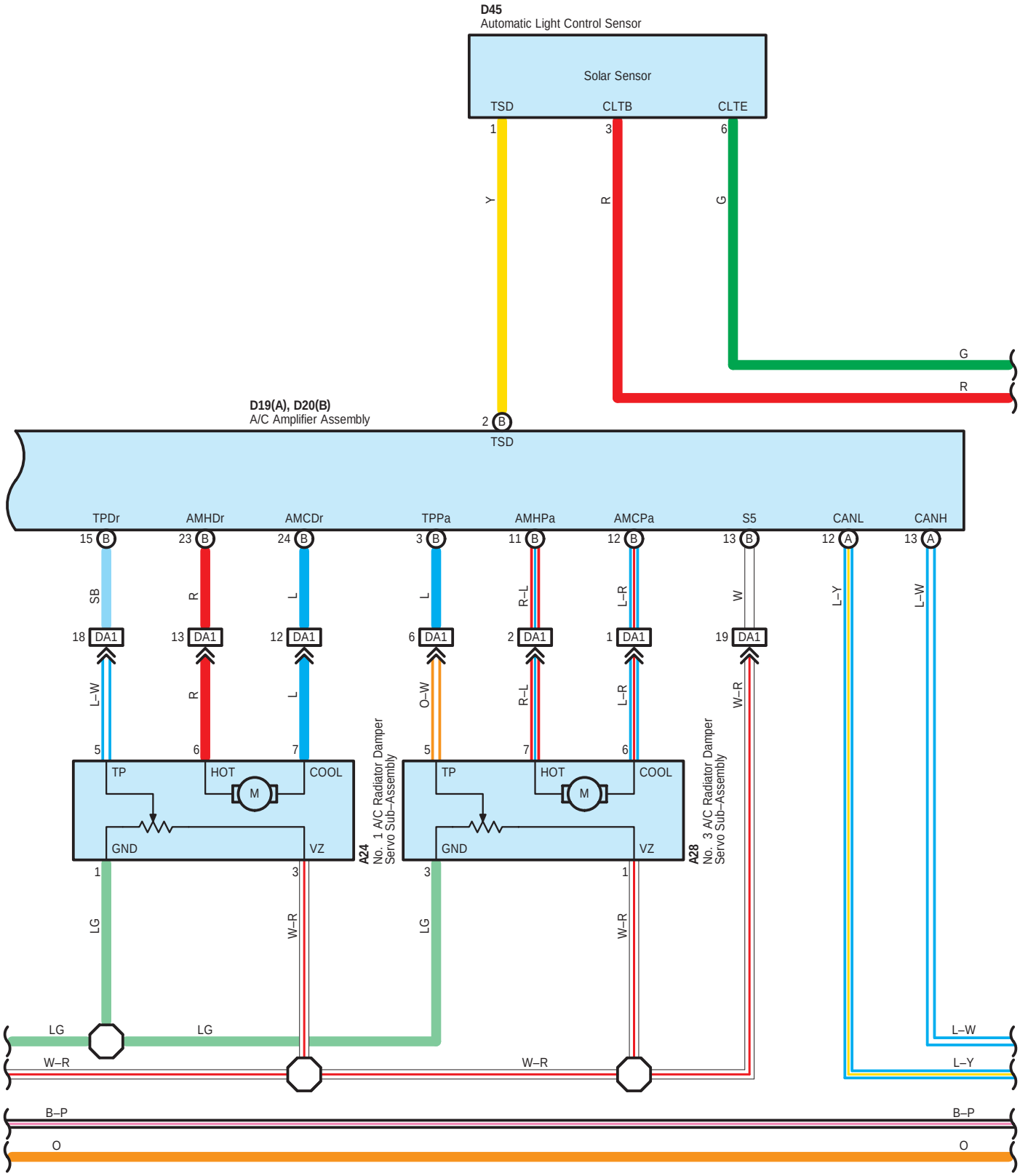
D45
Automatic Light Control Sensor
Solar Sensor
TSD
CLTB
CLTE
1
3
6
Y
R
G
G
R
D19(A), D20(B)
A/C Amplifier Assembly
2 B
TSD
TPDr
AMHDr
AMCDr
TPPa
AMHPa
AMCPa
S5
CANL
CANH
15 B
23 B
24 B
3 B
11 B
12 B
13 B
12 A
13 A
SB
R
L
L
R–L
L–R
W
L–Y
L–W
18 DA1
13 DA1
12 DA1
6 DA1
2 DA1
1 DA1
19 DA1
L–W
R
L
O–W
R–L
L–R
W–R
5
6
7
5
7
6
TP
HOT
COOL
M
GND
VZ
A24
No. 1 A/C Radiator Damper Servo Sub–Assembly
TP
HOT
COOL
M
GND
VZ
A28
No. 3 A/C Radiator Damper Servo Sub–Assembly
1
3
3
1
LG
W–R
LG
W–R
LG
LG
W–R
W–R
L–W
L–Y
B–P
B–P
O
O

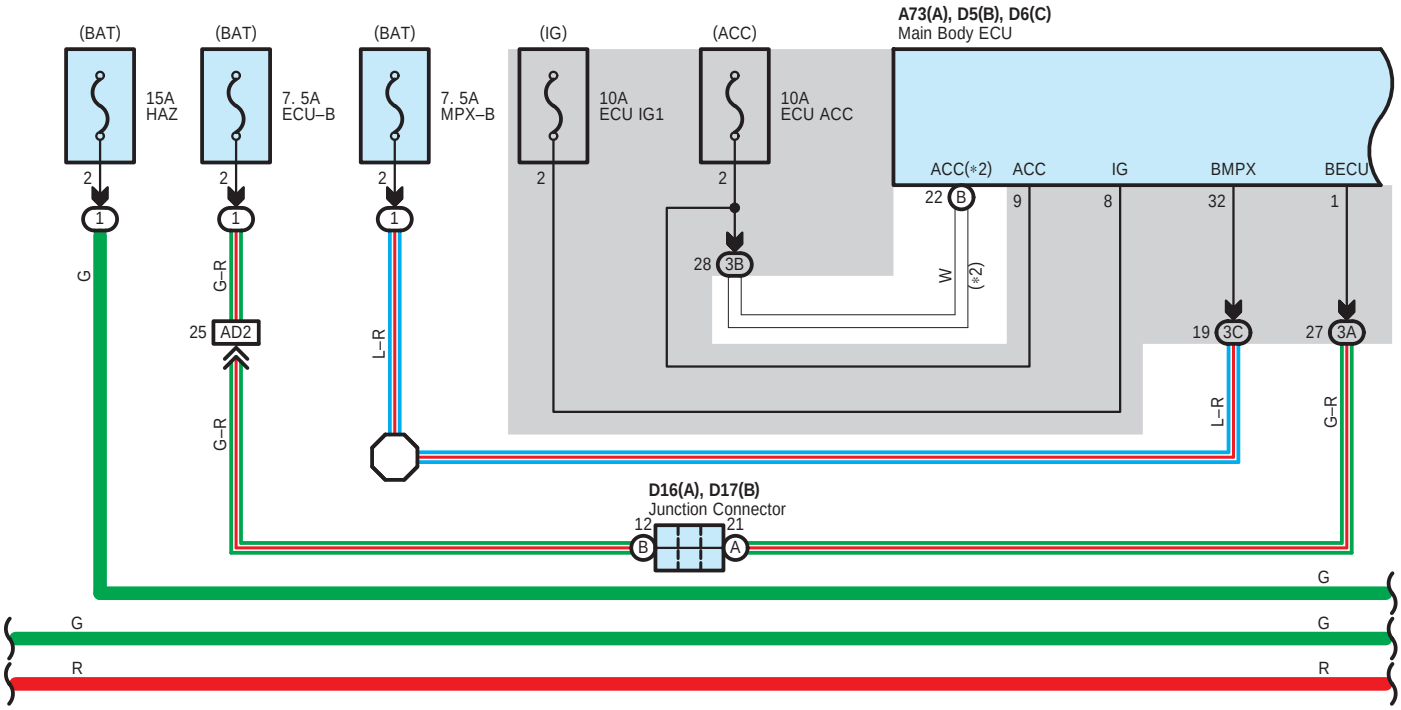

* 2 : w/ Entry & Start System

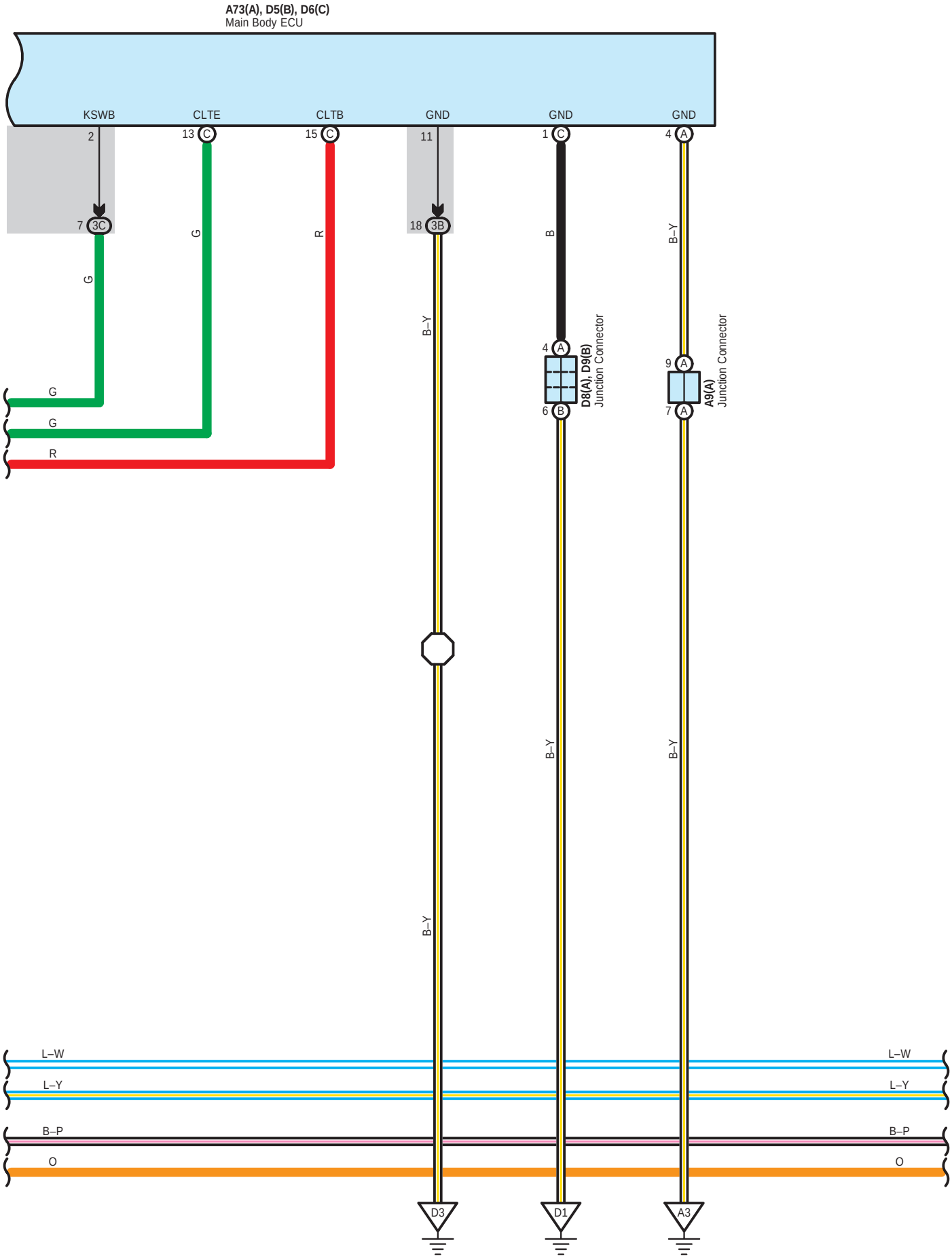
A73(A), D5(B), D6(C)
Main Body ECU
KSWB
CLTE
CLTB
GND
GND
GND
2
13 C
15 C
11
1 C
4 A
7 3C
18 3B
G
G
R
B
B–Y
B–Y
4 A
6 B
D8(A), D9(B)
Junction Connector
9 A
7 A
A9(A)
Junction Connector
G
G
R
B–Y
B–Y
B–Y
L–W
L–Y
B–P
O
L–W
L–Y
B–P
O
D3
D1
A3

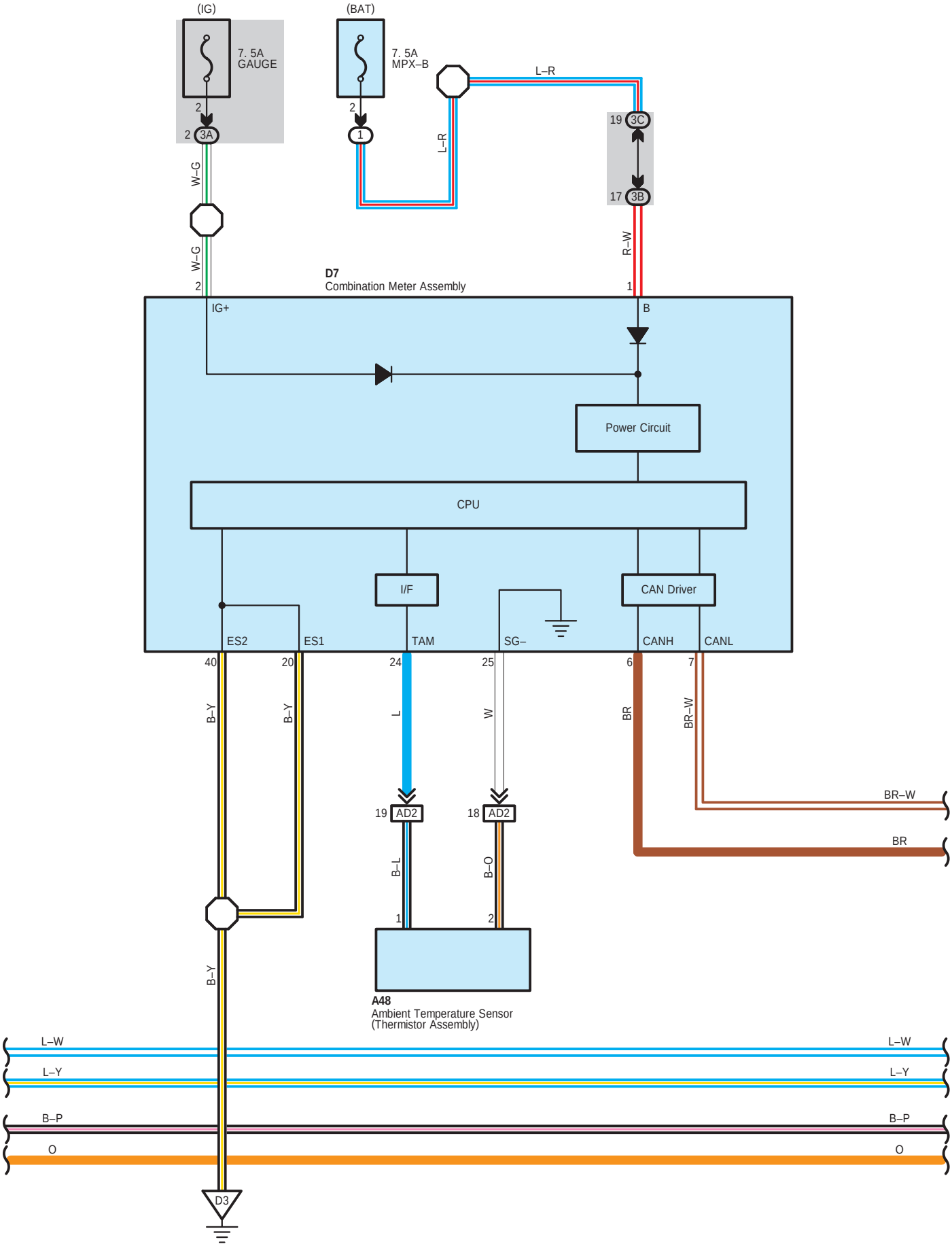
(IG)
7. 5A
GAUGE
2
2 3A
W–G
W–G
2
(BAT)
7. 5A
MPX–B
2
1
L–R
L–R
19 3C
17 3B
R–W
1
D7
Combination Meter Assembly
IG+
B
Power Circuit
CPU
I/F
CAN Driver
ES2
ES1
TAM
SG–
CANH
CANL
40
20
24
25
6
7
B–Y
B–Y
L
W
BR
BR–W
BR–W
BR
19 AD2
18 AD2
B–L
B–O
1
2
B–Y
A48
Ambient Temperature Sensor
(Thermistor Assembly)
L–W
L–W
L–Y
L–Y
B–P
B–P
O
O
D3

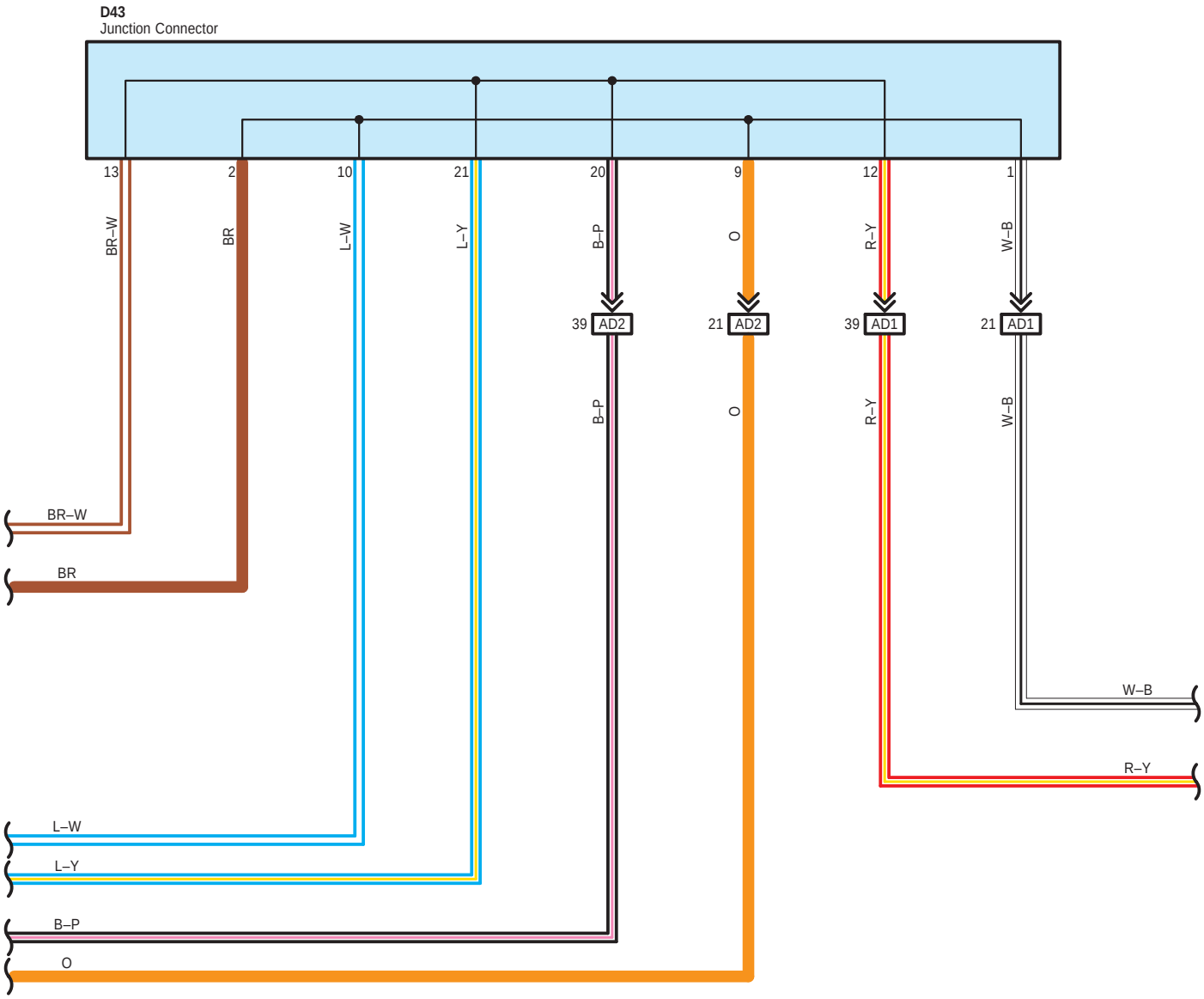
D43
Junction Connector
13
2
10
21
20
9
12
1
BR–W
BR
L–W
L–Y
B–P
O
R–Y
W–B
39 AD2
21 AD2
39 AD1
21 AD1
B–P
O
R–Y
W–B
BR–W
BR
W–B
R–Y
L–W
L–Y
B–P
O

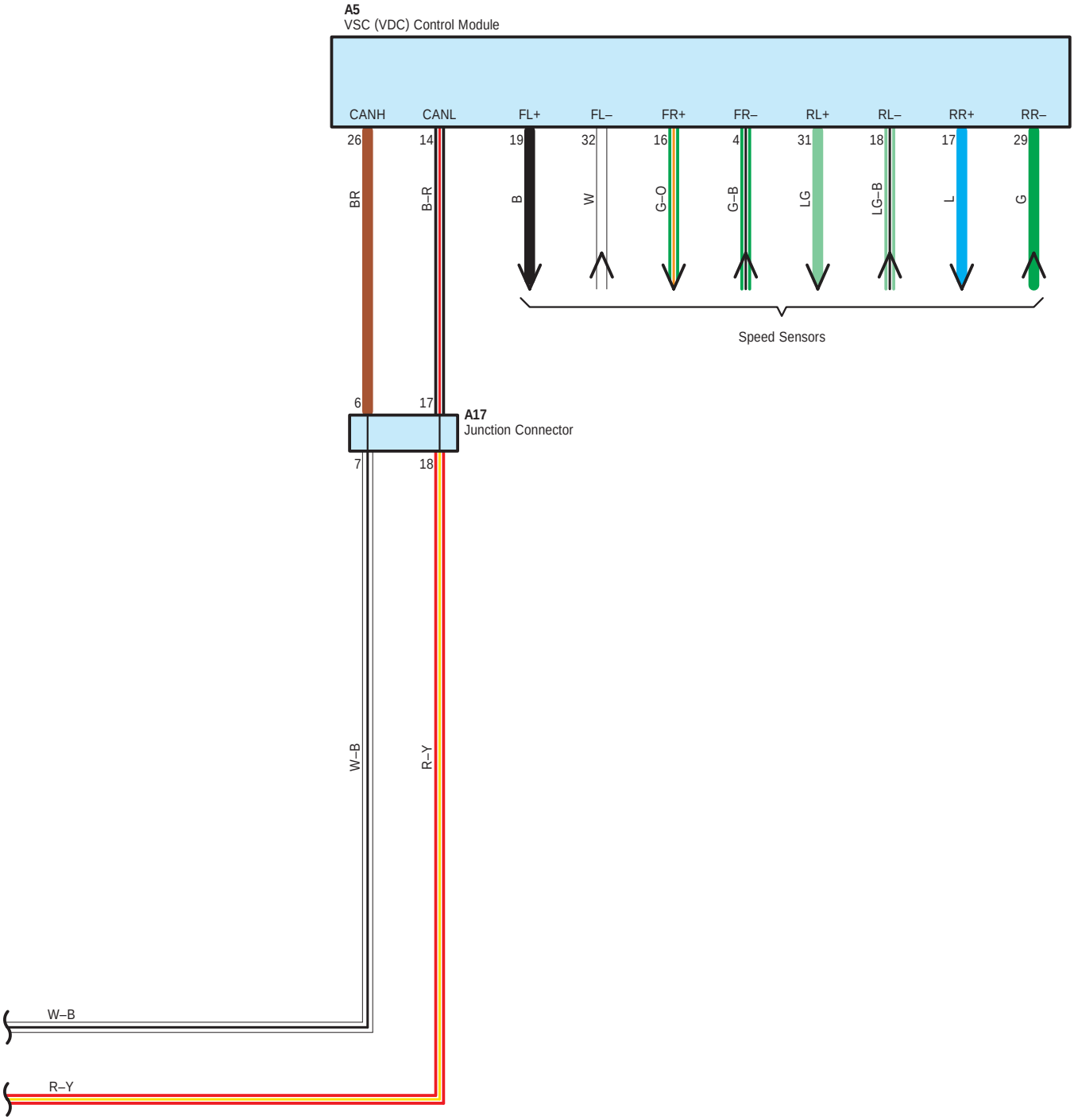
A5
VSC (VDC) Control Module
CANH
CANL
FL+
FL–
FR+
FR–
RL+
RL–
RR+
RR–
26
14
19
32
16
4
31
18
17
29
BR
B–R
B
W
G–O
G–B
LG
LG–B
L
G
Speed Sensors
6
17
A17
Junction Connector
7
18
W–B
R–Y
W–B
R–Y

○ : **Parts Location**

Code	See Page	Code	See Page	Code	See Page
A5	39 (LHD)	A34 B	42 (LHD)	D9 B	40 (LHD)
A7	39 (LHD)	A35 C	42 (LHD)	D16 A	40 (LHD)
A9 A	42 (LHD)	A36 D	42 (LHD)	D17 B	40 (LHD)
A17	42 (LHD)	A48	39 (LHD)	D19 A	40 (LHD)
A24	42 (LHD)	A73 A	42 (LHD)	D20 B	40 (LHD)
A25	42 (LHD)	C17	38 (LHD)	D43	41 (LHD)
A27	42 (LHD)	C33	38 (LHD)	D45	41 (LHD)
A28	42 (LHD)	C35	38 (LHD)	D46 A	41 (LHD)
A29	42 (LHD)	D5 B	40 (LHD)	D47 B	41 (LHD)
A31	42 (LHD)	D6 C	40 (LHD)	D74	41 (LHD)
A32	42 (LHD)	D7	40 (LHD)		
A33 A	42 (LHD)	D8 A	40 (LHD)		

: **Relay Blocks**

Code	See Page	Relay Blocks (Relay Block Location)
1	24	Engine Room R/B (Engine Compartment Right)
2	25	R/B No. 2 (Behind Glove Box)

: **Junction Block and Wire Harness Connector**

Code	See Page	Junction Block and Wire Harness (Connector Location)
3A	26	Instrument Panel Wire and Instrument Panel J/B Assembly (Instrument Panel Reinforcement)
3B		
3C	26	Engine Room Main Wire and Instrument Panel J/B Assembly (Instrument Panel Reinforcement)

: **Connector Joining Wire Harness and Wire Harness**

Code	See Page	Joining Wire Harness and Wire Harness (Connector Location)
AC1	54 (LHD)	Engine Room Main Wire and Engine Wire (Engine Unit)
AD1	55 (LHD)	Engine Room Main Wire and Instrument Panel Wire (Cowl Side Panel RH)
AD2	55 (LHD)	Engine Room Main Wire and Instrument Panel Wire (Instrument Panel Reinforcement)
DA1	55 (LHD)	Instrument Panel Wire and Engine Room Main Wire (Behind Glove Box)

▽ : **Ground Points**

Code	See Page	Ground Points Location
A3	55 (LHD)	Cowl Side Panel RH
A7	54 (LHD)	Front Fender Apron RH
C1	54 (LHD)	Engine Unit
D1	55 (LHD)	Cowl Side Panel LH
D3	55 (LHD)	Instrument Panel Brace RH

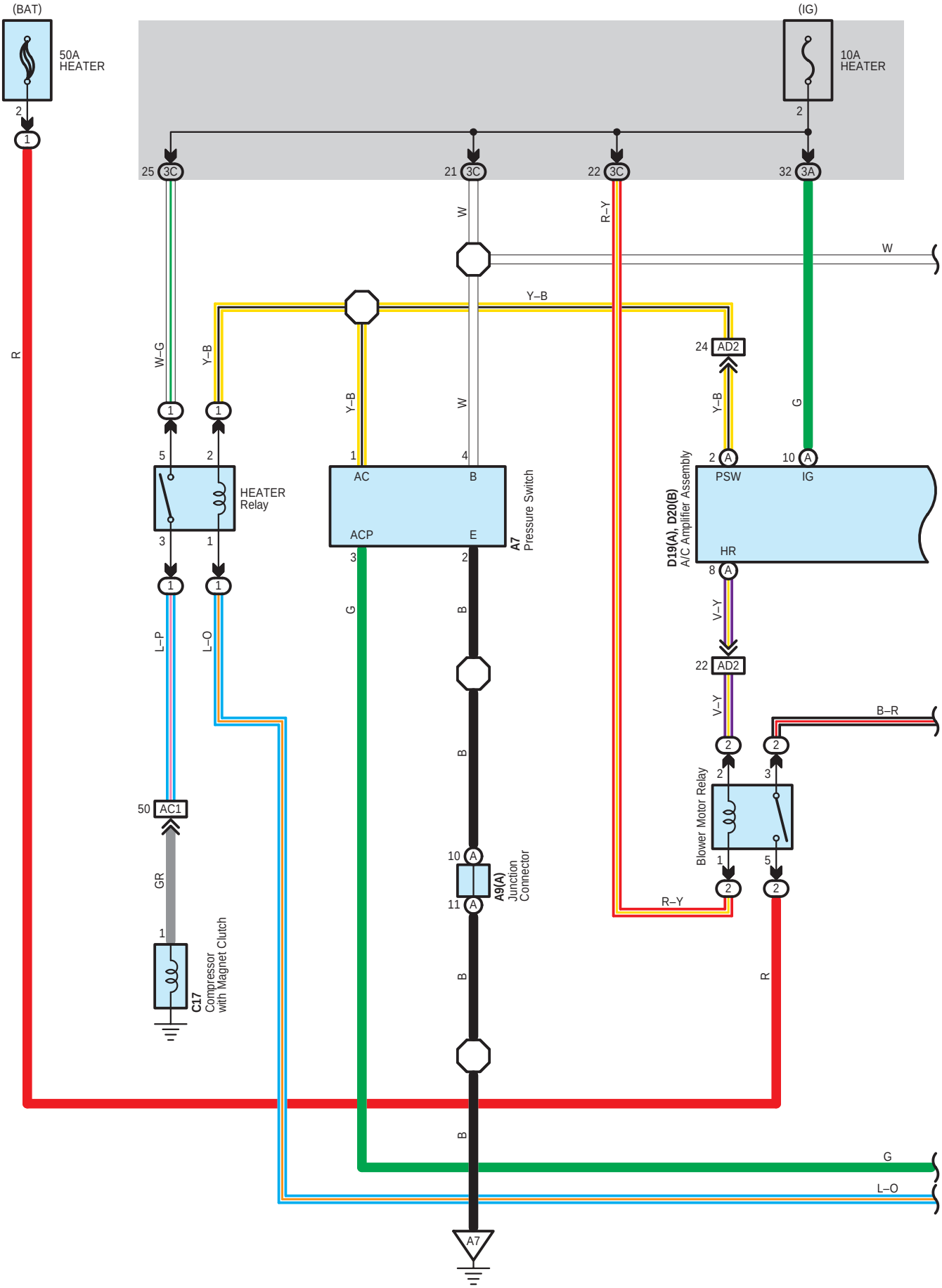
(BAT)
50A
HEATER
(IG)
10A
HEATER
25 3C
21 3C
22 3C
32 3A
W
R–Y
Y–B
24 AD2
W–G
Y–B
W
G
HEATER
Relay
AC
B
ACP
E
A7
Pressure Switch
PSW
IG
HR
D19(A), D20(B)
A/C Amplifier Assembly
V–Y
22 AD2
B–R
L–P
L–O
50 AC1
GR
10 A
11 A
A9(A)
Junction
Connector
Blower Motor Relay
R–Y
C17
Compressor
with Magnet Clutch
R
G
L–O
A7

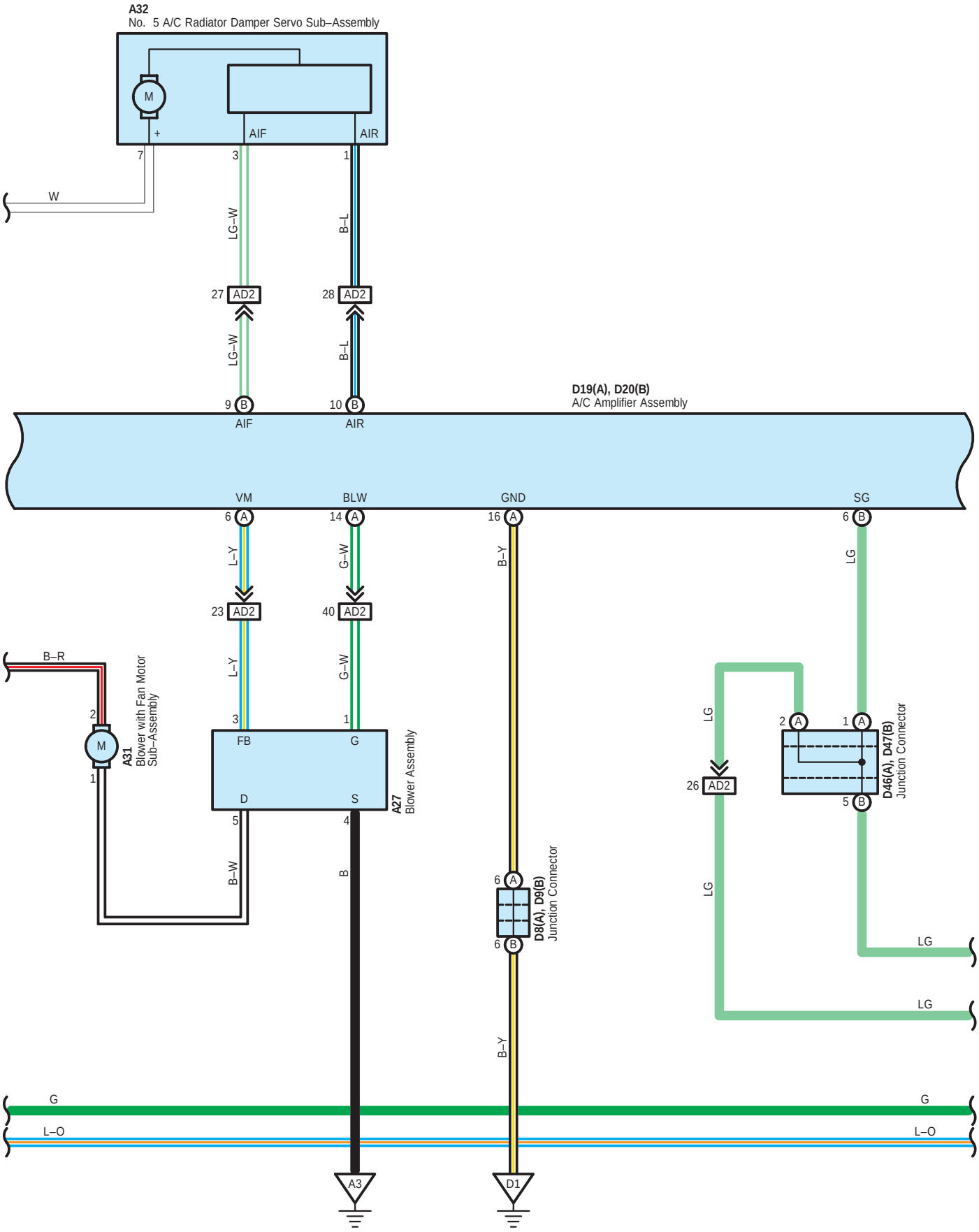
A32
No. 5 A/C Radiator Damper Servo Sub–Assembly
M
+
AIF
AIR
7
3
1
W
LG–W
B–L
27 AD2
28 AD2
LG–W
B–L
9 B
10 B
AIF
AIR
D19(A), D20(B)
A/C Amplifier Assembly
VM
BLW
GND
SG
6 A
14 A
16 A
6 B
L–Y
G–W
B–Y
LG
23 AD2
40 AD2
B–R
2
M
1
A31
Blower with Fan Motor
Sub–Assembly
L–Y
G–W
3
1
FB
G
D
S
A27
Blower Assembly
5
4
B–W
B
LG
26 AD2
2 A
1 A
5 B
D46(A), D47(B)
Junction Connector
LG
6 A
6 B
D8(A), D9(B)
Junction Connector
B–Y
LG
LG
G
L–O
G
L–O
A3
D1

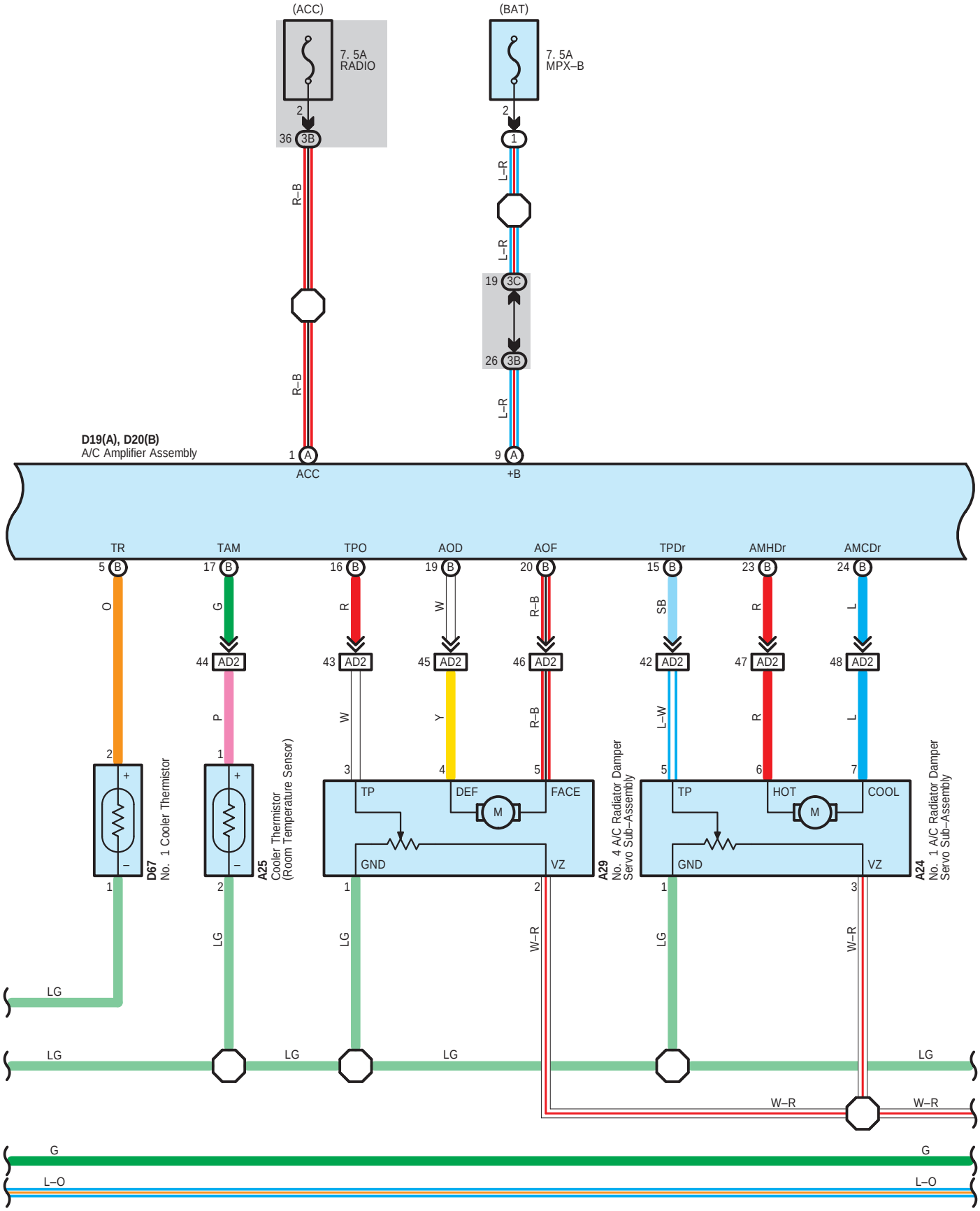
(ACC)
7. 5A
RADIO
36 3B
R–B
R–B
(BAT)
7. 5A
MPX–B
1
L–R
L–R
19 3C
26 3B
L–R
D19(A), D20(B)
A/C Amplifier Assembly
1 A
ACC
9 A
+B
TR
TAM
TPO
AOD
AOF
TPDr
AMHDr
AMCDr
5 B
17 B
16 B
19 B
20 B
15 B
23 B
24 B
O
G
R
W
R–B
SB
R
L
44 AD2
43 AD2
45 AD2
46 AD2
42 AD2
47 AD2
48 AD2
P
W
Y
R–B
L–W
R
L
D67
No. 1 Cooler Thermistor
A25
Cooler Thermistor
(Room Temperature Sensor)
TP
DEF
FACE
M
GND
VZ
A29
No. 4 A/C Radiator Damper
Servo Sub–Assembly
TP
HOT
COOL
M
GND
VZ
A24
No. 1 A/C Radiator Damper
Servo Sub–Assembly
LG
LG
W–R
LG
W–R
LG
LG
LG
LG
W–R
W–R
G
G
L–O
L–O

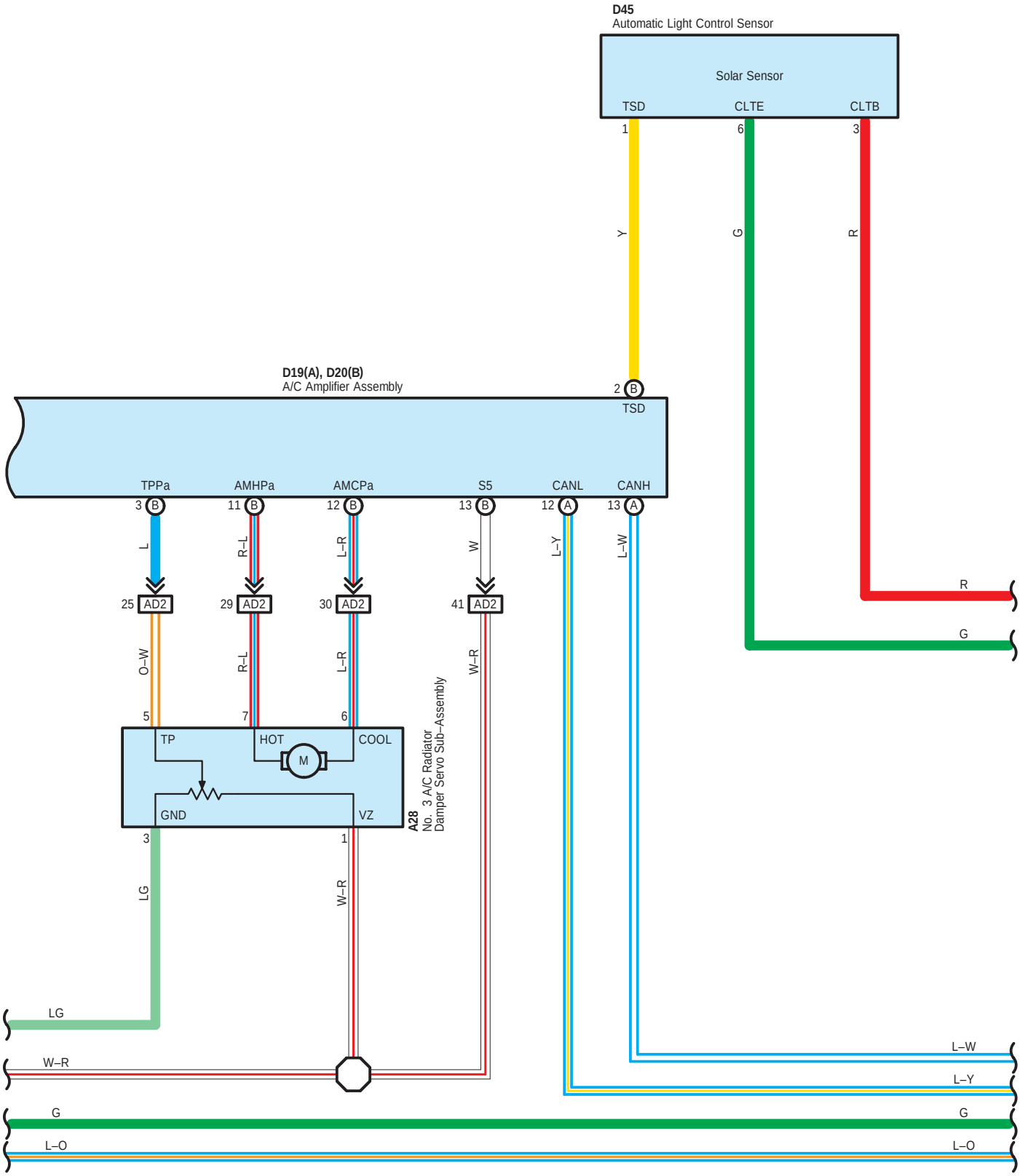
D45
Automatic Light Control Sensor
Solar Sensor
TSD
CLTE
CLTB
1
6
3
Y
G
R
D19(A), D20(B)
A/C Amplifier Assembly
2 B
TSD
TPPa
AMHPa
AMCPa
S5
CANL
CANH
3 B
11 B
12 B
13 B
12 A
13 A
L
R–L
L–R
W
L–Y
L–W
25 AD2
29 AD2
30 AD2
41 AD2
O–W
R–L
L–R
W–R
5
7
6
TP
HOT
COOL
M
GND
VZ
A28
No. 3 A/C Radiator
Damper Servo Sub–Assembly
3
1
LG
W–R
R
G
LG
W–R
L–W
L–Y
G
G
L–O
L–O

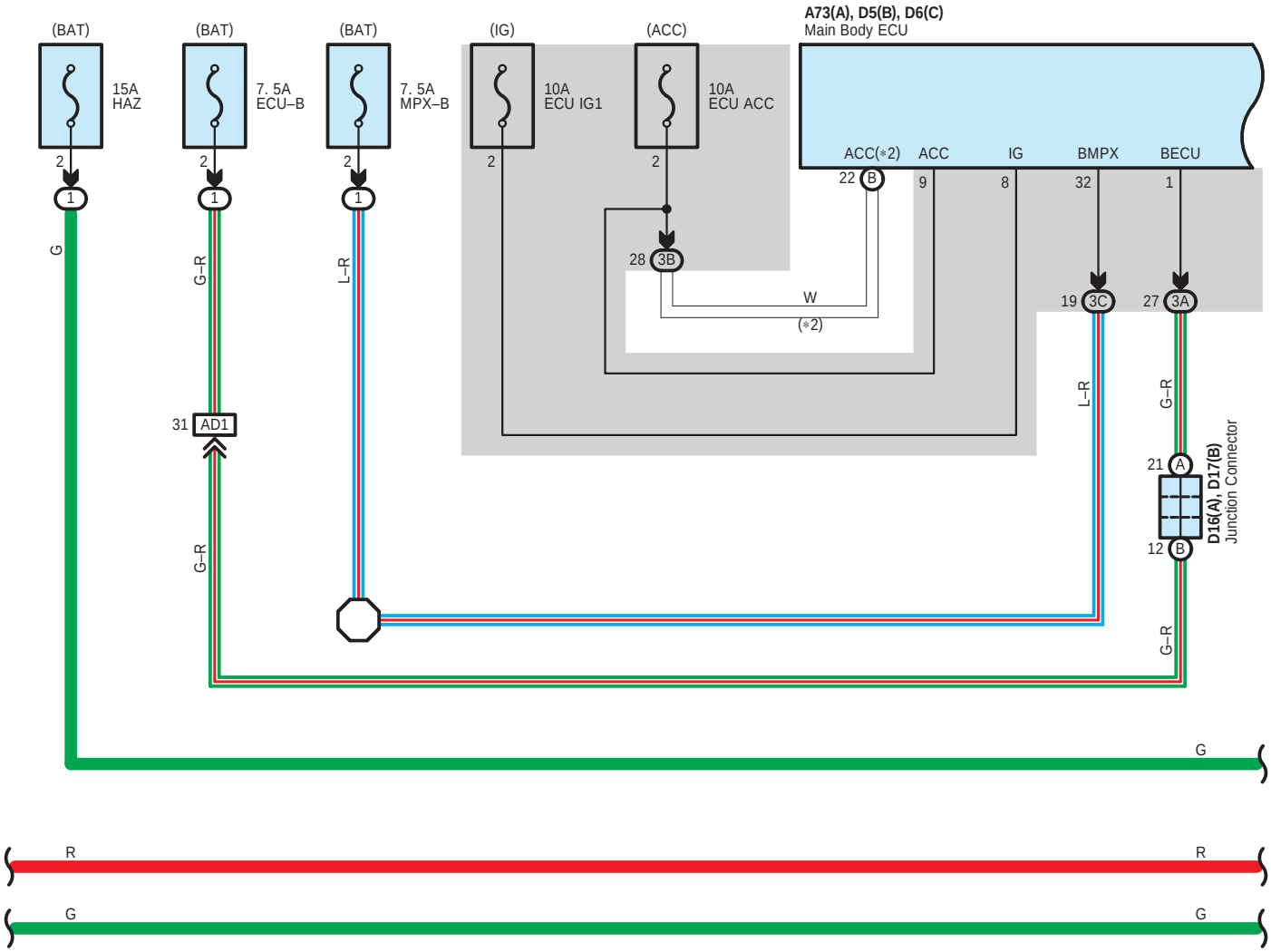

∗ 2 : w/ Entry & Start System

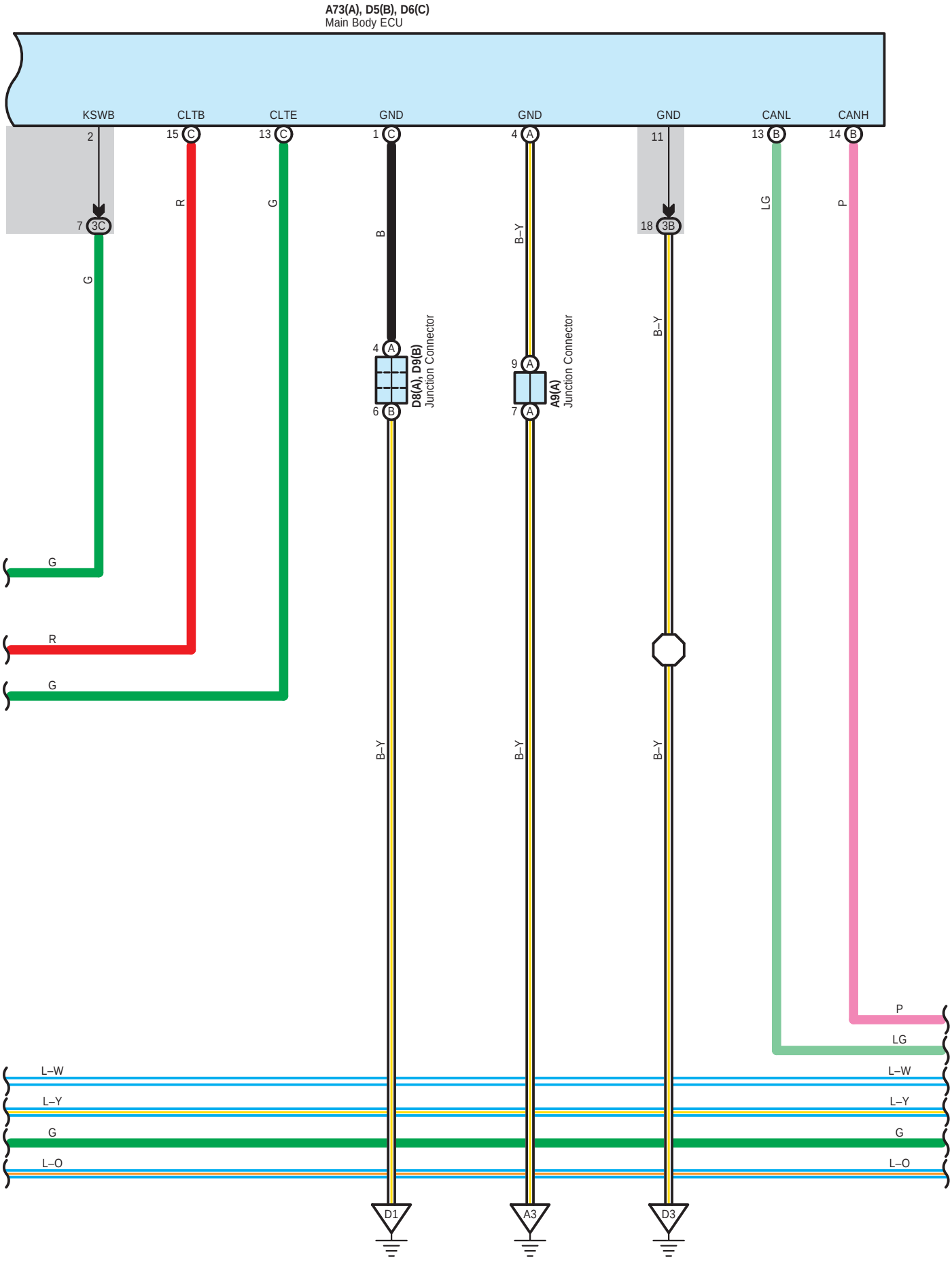
A73(A), D5(B), D6(C)
Main Body ECU
KSWB
CLTB
CLTE
GND
GND
GND
CANL
CANH
2
15 C
13 C
1 C
4 A
11
13 B
14 B
7 3C
18 3B
G
R
G
B
B–Y
B–Y
LG
P
4 A
6 B
D8(A), D9(B)
Junction Connector
9 A
7 A
A9(A)
Junction Connector
G
R
G
B–Y
B–Y
B–Y
P
LG
L–W
L–Y
G
L–O
L–W
L–Y
G
L–O
D1
A3
D3

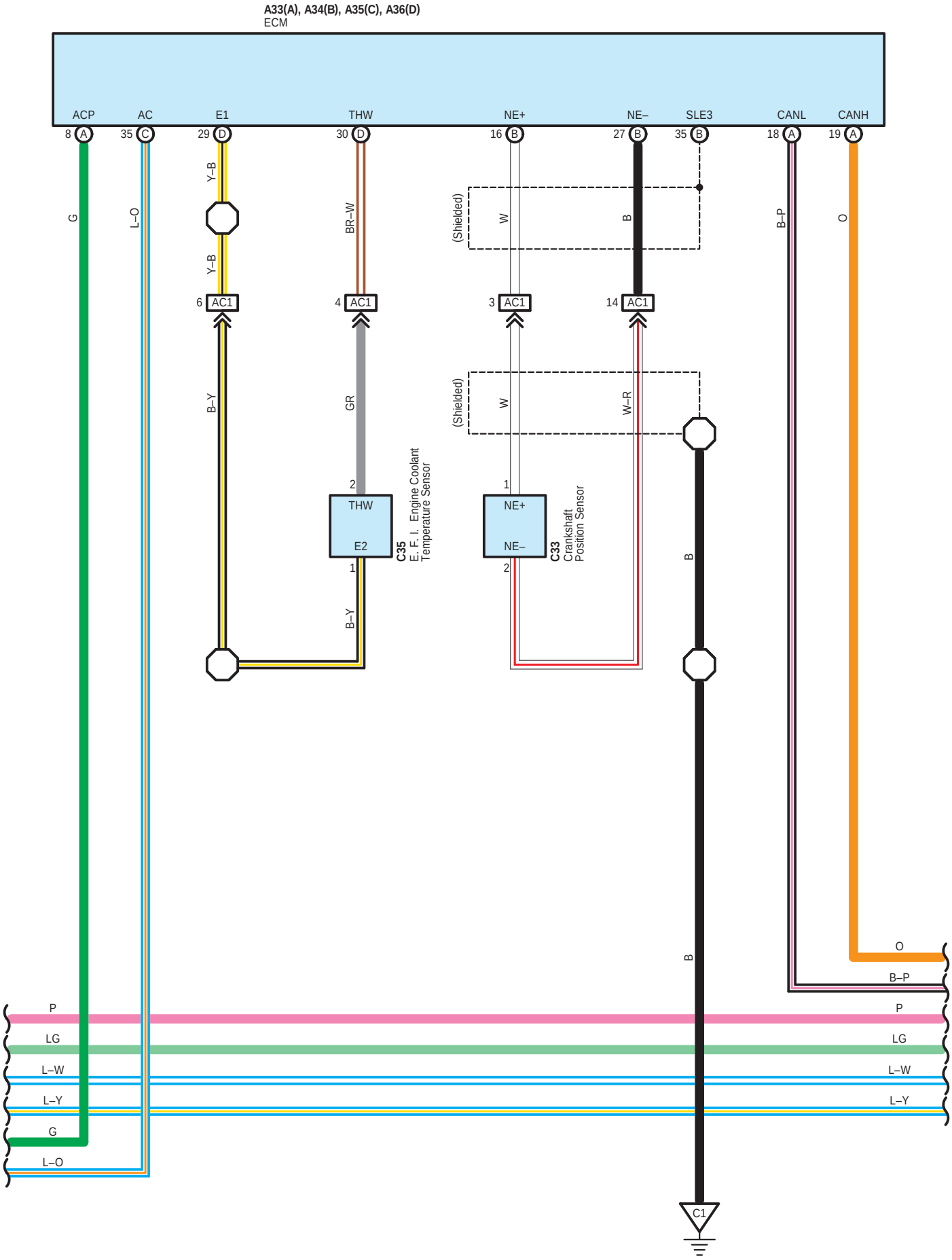
A33(A), A34(B), A35(C), A36(D)
ECM
ACP
AC
E1
THW
NE+
NE–
SLE3
CANL
CANH
8 A
35 C
29 D
30 D
16 B
27 B
35 B
18 A
19 A
G
L–O
Y–B
Y–B
BR–W
(Shielded)
W
B
B–P
O
6 AC1
4 AC1
3 AC1
14 AC1
B–Y
GR
(Shielded)
W
W–R
2
THW
E2
1
C35
E. F. I. Engine Coolant Temperature Sensor
B–Y
1
NE+
NE–
2
C33
Crankshaft Position Sensor
B
B
O
B–P
P
LG
L–W
L–Y
G
L–O
P
LG
L–W
L–Y
C1

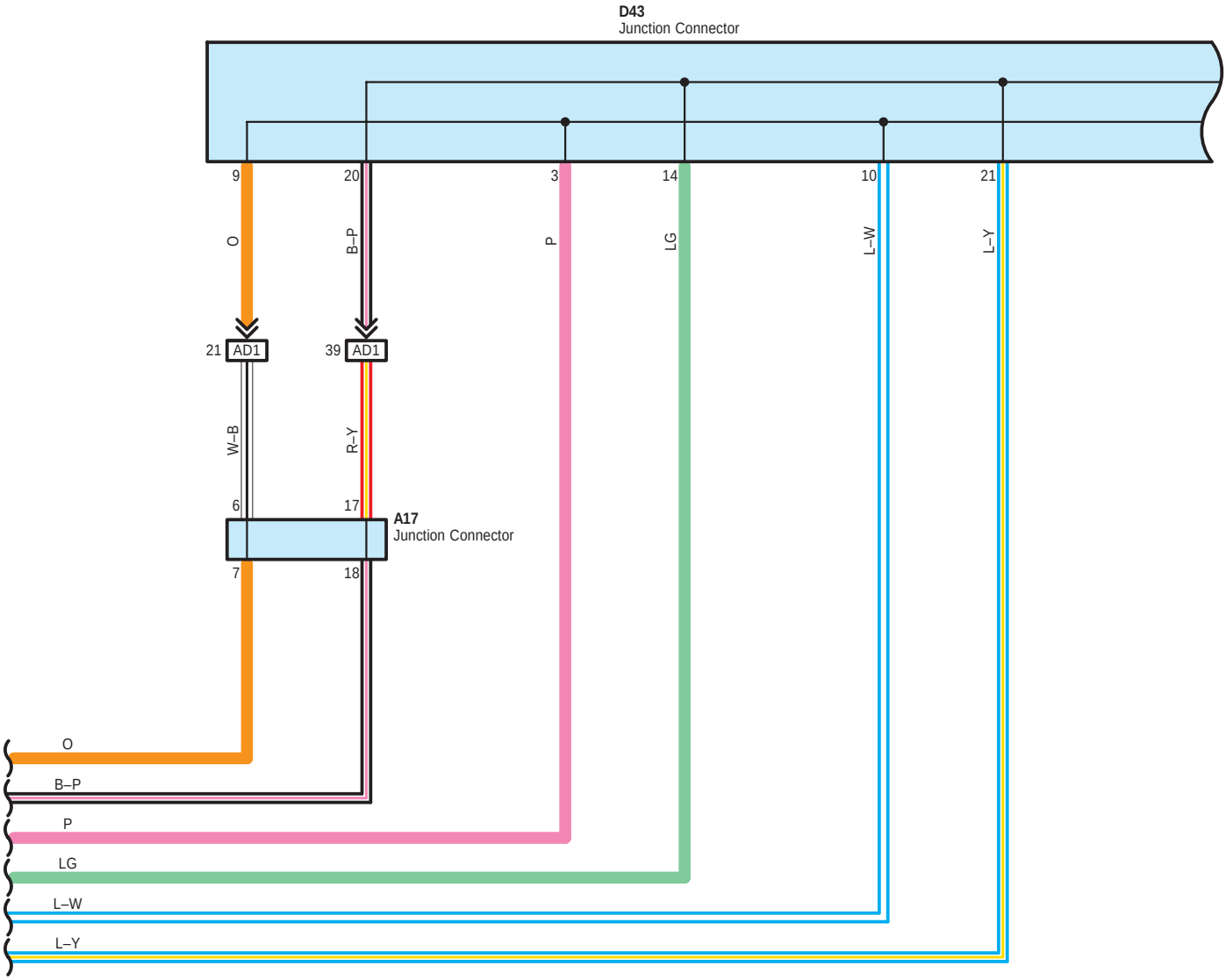
D43
Junction Connector
9
20
3
14
10
21
O
B–P
P
LG
L–W
L–Y
21
AD1
39
AD1
W–B
R–Y
6
17
A17
Junction Connector
7
18
O
B–P
P
LG
L–W
L–Y

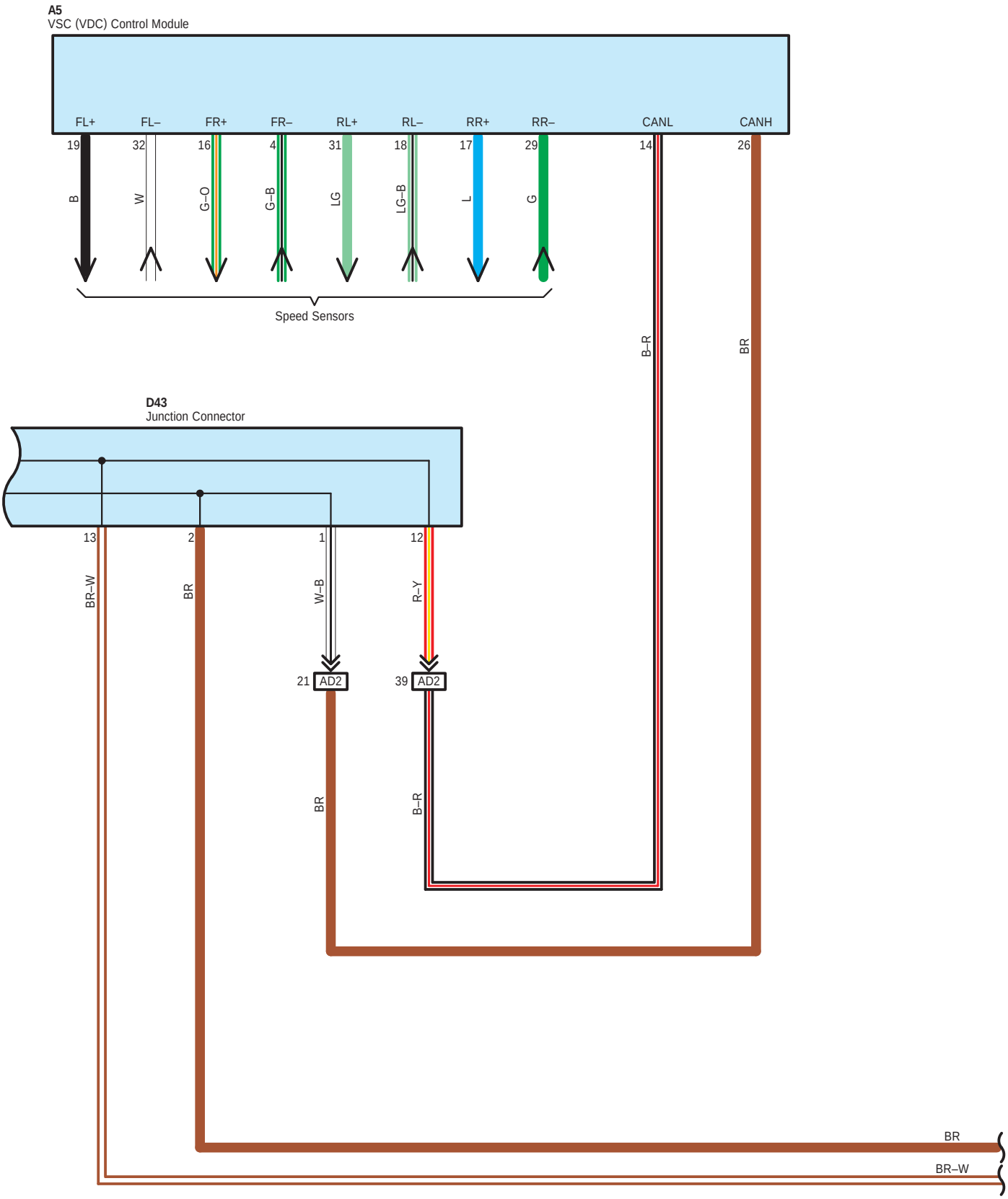
A5
VSC (VDC) Control Module
FL+
FL–
FR+
FR–
RL+
RL–
RR+
RR–
CANL
CANH
19
32
16
4
31
18
17
29
14
26
B
W
G–O
G–B
LG
LG–B
L
G
Speed Sensors
B–R
BR
D43
Junction Connector
13
2
1
12
BR–W
BR
W–B
R–Y
21
AD2
39
AD2
BR
B–R
BR
BR–W

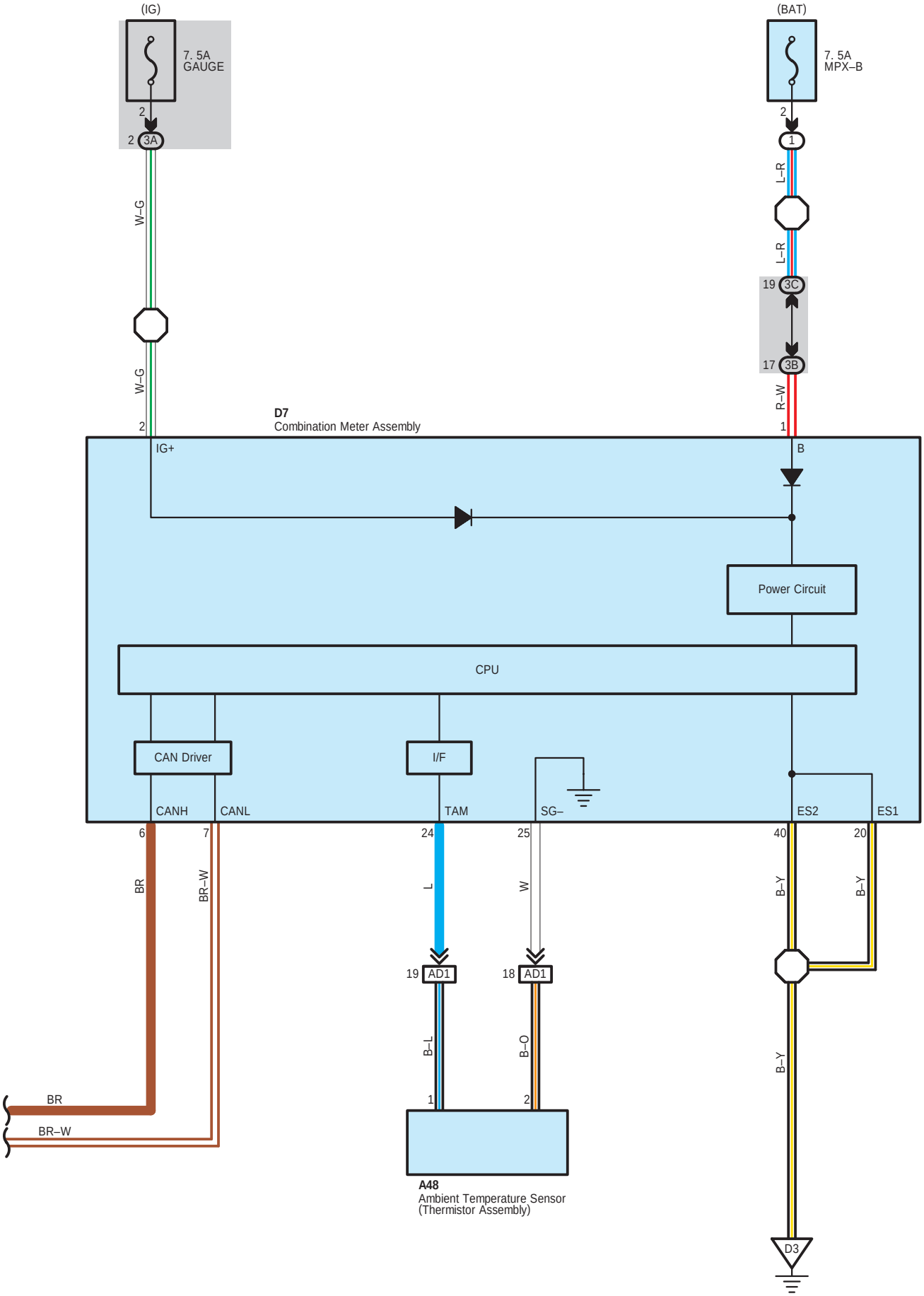
(IG)
7. 5A
GAUGE
2
2 3A
W–G
W–G
2
(BAT)
7. 5A
MPX–B
2
1
L–R
L–R
19 3C
17 3B
R–W
1
D7
Combination Meter Assembly
IG+
B
Power Circuit
CPU
CAN Driver
I/F
CANH
CANL
TAM
SG–
ES2
ES1
6
7
24
25
40
20
BR
BR–W
L
W
B–Y
B–Y
19 AD1
18 AD1
B–L
B–O
B–Y
1
2
BR
BR–W
A48
Ambient Temperature Sensor
(Thermistor Assembly)
D3

○ : **Parts Location**

Code	See Page	Code	See Page	Code	See Page
A5	47 (RHD)	A34 B	50 (RHD)	D9 B	48 (RHD)
A7	47 (RHD)	A35 C	50 (RHD)	D16 A	48 (RHD)
A9 A	50 (RHD)	A36 D	50 (RHD)	D17 B	48 (RHD)
A17	50 (RHD)	A48	47 (RHD)	D19 A	48 (RHD)
A24	50 (RHD)	A73 A	50 (RHD)	D20 B	48 (RHD)
A25	50 (RHD)	C17	46 (RHD)	D43	49 (RHD)
A27	50 (RHD)	C33	46 (RHD)	D45	49 (RHD)
A28	50 (RHD)	C35	46 (RHD)	D46 A	49 (RHD)
A29	50 (RHD)	D5 B	48 (RHD)	D47 B	49 (RHD)
A31	50 (RHD)	D6 C	48 (RHD)	D67	49 (RHD)
A32	50 (RHD)	D7	48 (RHD)		
A33 A	50 (RHD)	D8 A	48 (RHD)		

: **Relay Blocks**

Code	See Page	Relay Blocks (Relay Block Location)
1	24	Engine Room R/B (Engine Compartment Right)
2	25	R/B No. 2 (Behind Glove Box)

: **Junction Block and Wire Harness Connector**

Code	See Page	Junction Block and Wire Harness (Connector Location)
3A	26	Instrument Panel Wire and Instrument Panel J/B Assembly (Instrument Panel Reinforcement)
3B		
3C	26	Engine Room Main Wire and Instrument Panel J/B Assembly (Instrument Panel Reinforcement)

: **Connector Joining Wire Harness and Wire Harness**

Code	See Page	Joining Wire Harness and Wire Harness (Connector Location)
AC1	58 (RHD)	Engine Room Main Wire and Engine Wire (Engine Unit)
AD1	59 (RHD)	Engine Room Main Wire and Instrument Panel Wire (Cowl Side Panel RH)
AD2	59 (RHD)	Engine Room Main Wire and Instrument Panel Wire (Instrument Panel Reinforcement)

▽ : **Ground Points**

Code	See Page	Ground Points Location
A3	59 (RHD)	Cowl Side Panel LH
A7	58 (RHD)	Front Fender Apron RH
C1	58 (RHD)	Engine Unit
D1	59 (RHD)	Cowl Side Panel RH
D3	59 (RHD)	Instrument Panel Brace LH

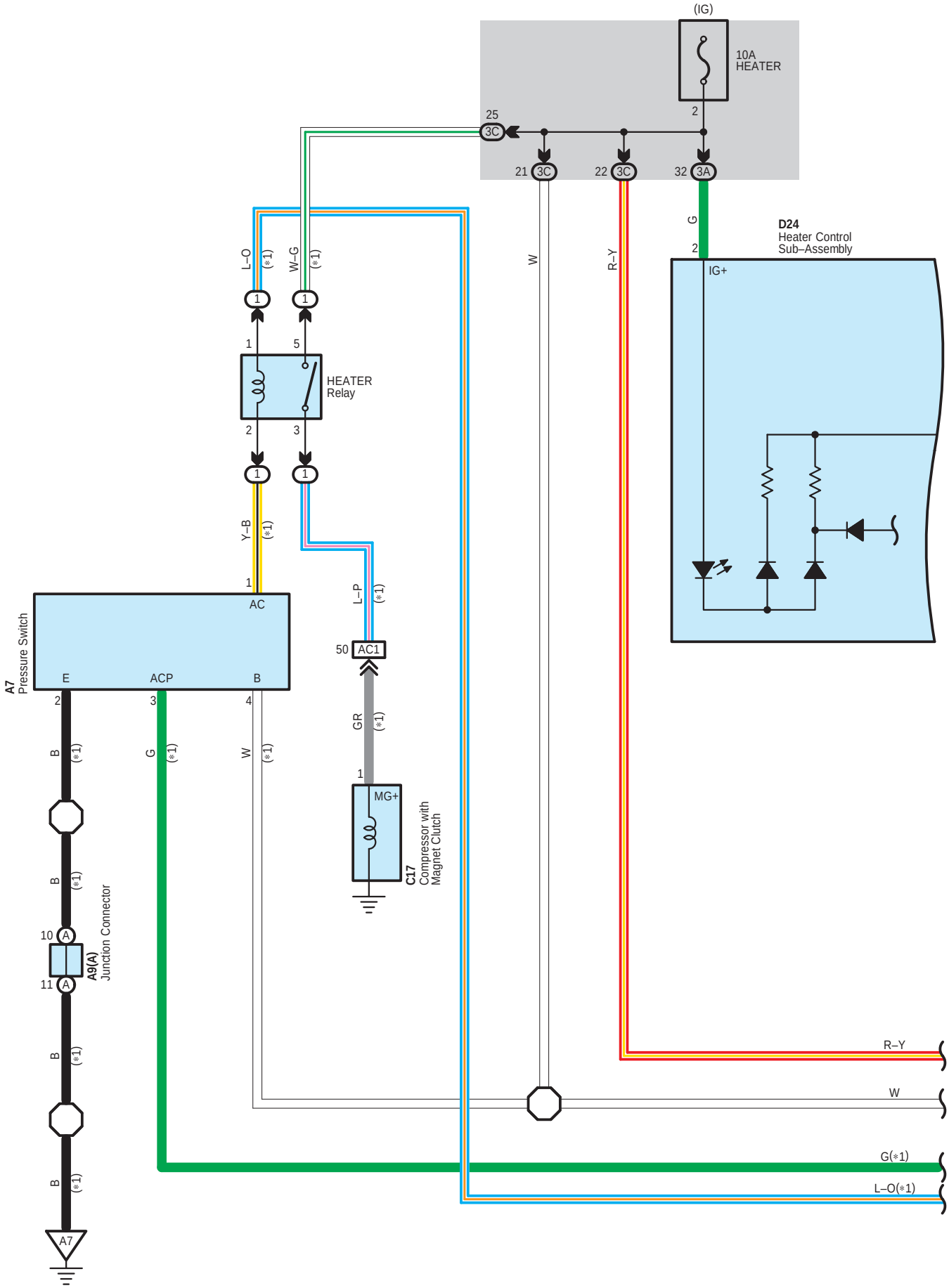
(IG)
10A
HEATER
2
25
3C
21 3C
22 3C
32 3A
G
D24
Heater Control
Sub–Assembly
2
IG+
L–O
(*1)
W–G
(*1)
1
1
1
5
HEATER
Relay
2
3
1
1
Y–B
(*1)
1
AC
A7
Pressure Switch
E
ACP
B
2
3
4
L–P
(*1)
50
AC1
GR
(*1)
1
MG+
C17
Compressor with
Magnet Clutch
B
(*1)
G
(*1)
W
(*1)
B
(*1)
10
A
A9(A)
Junction Connector
11
A
B
(*1)
B
(*1)
A7
W
R–Y
R–Y
W
G(*1)
L–O(*1)

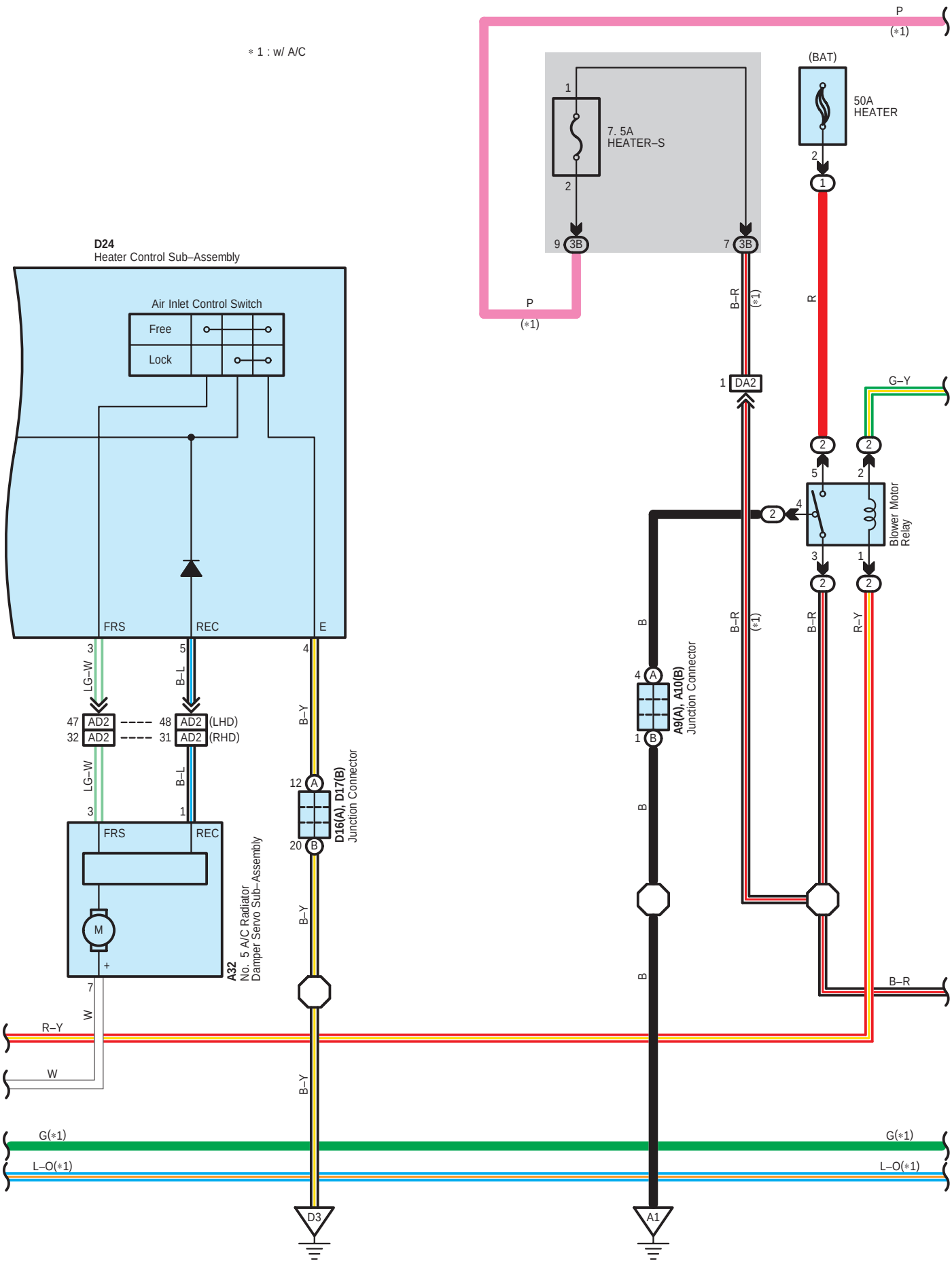
∗1 : w/ A/C
P
(∗1)
(BAT)
50A
HEATER
7. 5A
HEATER–S
D24
Heater Control Sub–Assembly
Air Inlet Control Switch
Free
Lock
FRS
REC
E
LG–W
B–L
B–Y
AD2
(LHD)
(RHD)
D16(A), D17(B)
Junction Connector
A32
No. 5 A/C Radiator
Damper Servo Sub–Assembly
M
R–Y
W
G(∗1)
L–O(∗1)
D3
B–R
R
DA2
G–Y
Blower Motor
Relay
B
A9(A), A10(B)
Junction Connector
A1

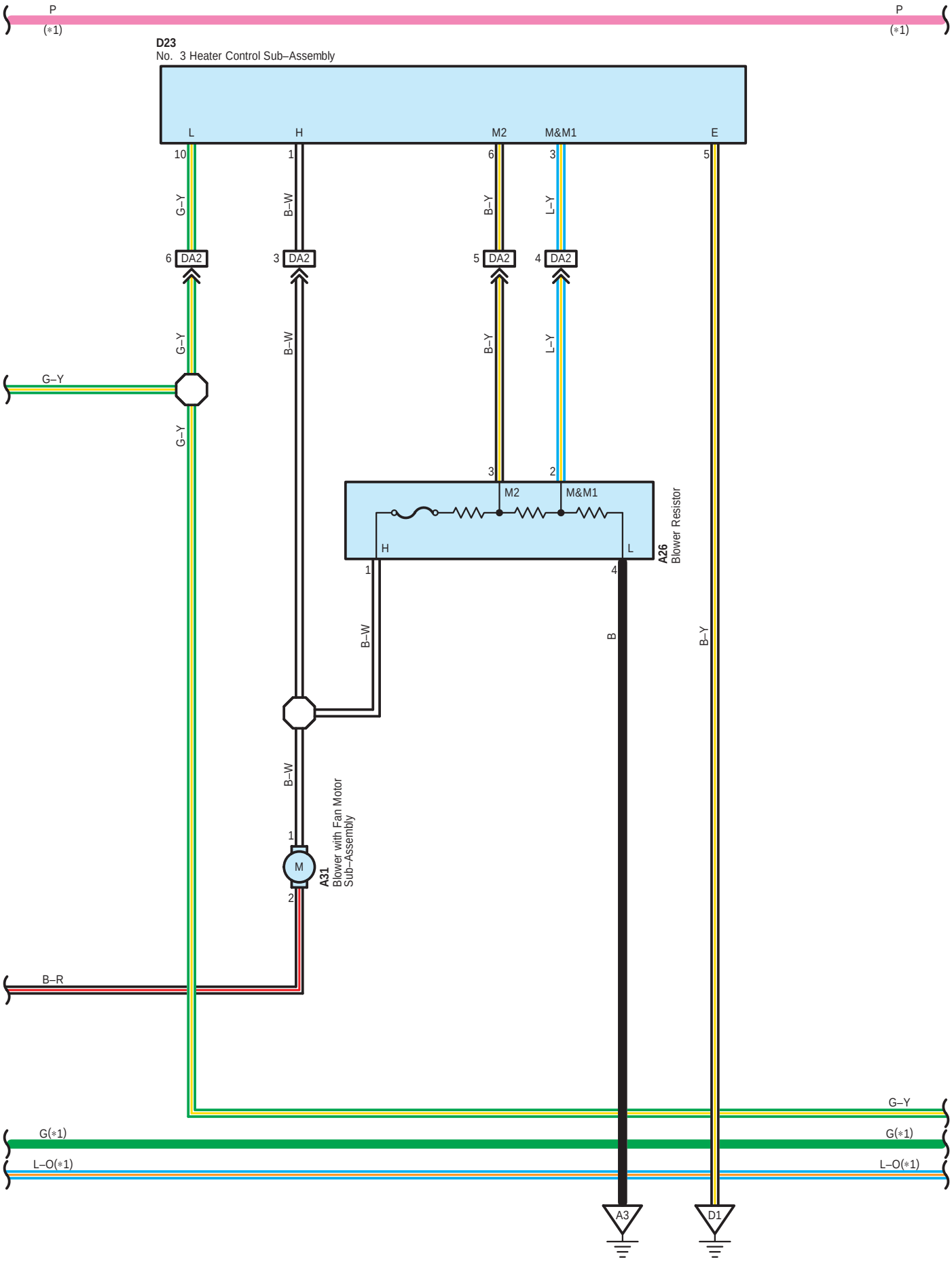
P
(*1)
P
(*1)
D23
No. 3 Heater Control Sub–Assembly
L
H
M2
M&M1
E
10
1
6
3
5
G–Y
B–W
B–Y
L–Y
6 DA2
3 DA2
5 DA2
4 DA2
G–Y
B–W
B–Y
L–Y
G–Y
G–Y
3
2
M2
M&M1
H
L
A26
Blower Resistor
1
4
B–W
B
B–Y
B–W
1
M
2
A31
Blower with Fan Motor
Sub–Assembly
B–R
G–Y
G(*1)
G(*1)
L–O(*1)
L–O(*1)
A3
D1

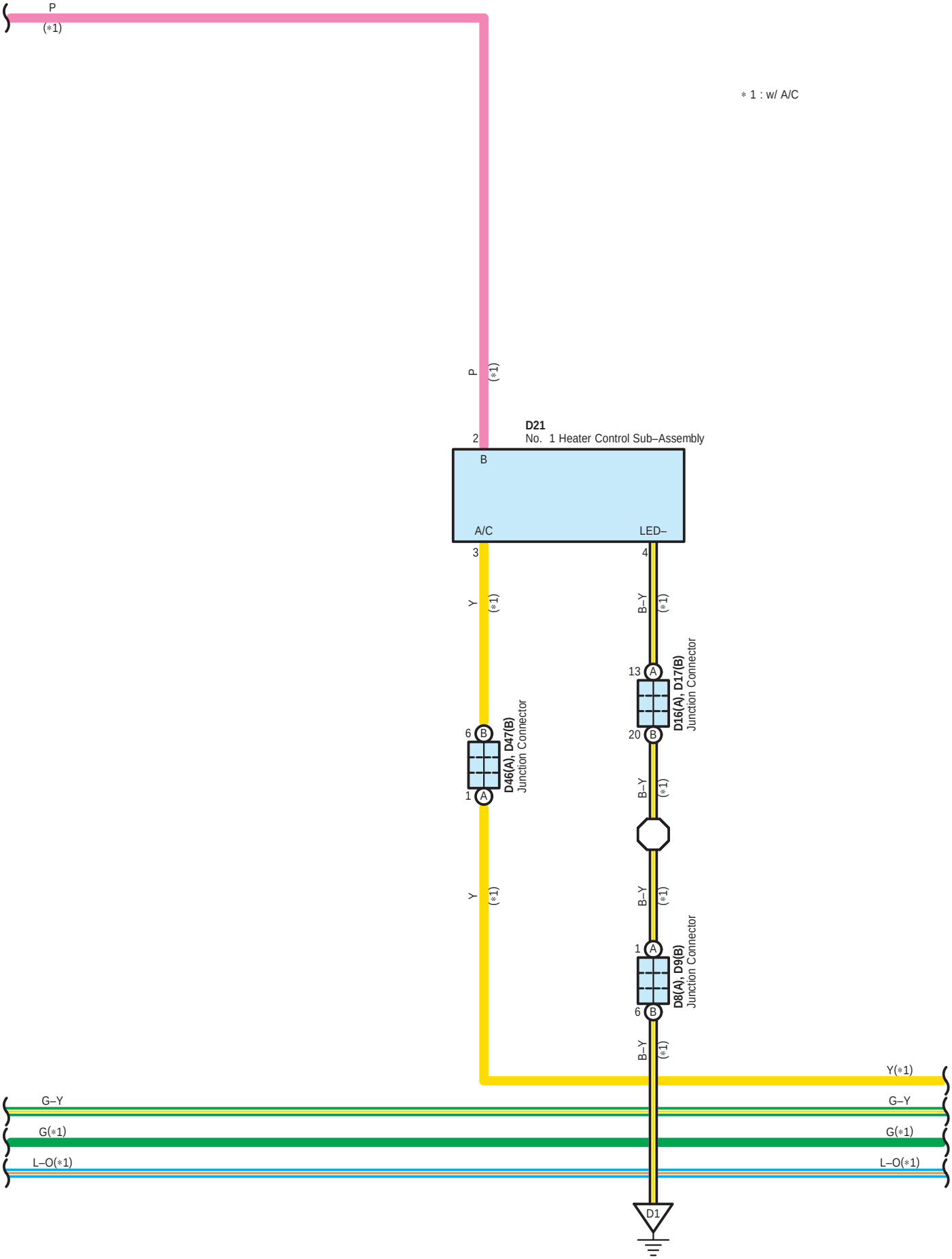
P
(∗1)
∗ 1 : w/ A/C
P
(∗1)
D21
No. 1 Heater Control Sub–Assembly
2
B
A/C
LED–
3
4
Y
(∗1)
B–Y
(∗1)
13
A
D16(A), D17(B)
Junction Connector
20
B
6
B
D46(A), D47(B)
Junction Connector
1
A
B–Y
(∗1)
Y
(∗1)
B–Y
(∗1)
1
A
D8(A), D9(B)
Junction Connector
6
B
B–Y
(∗1)
Y(∗1)
G–Y
G–Y
G(∗1)
G(∗1)
L–O(∗1)
L–O(∗1)
D1

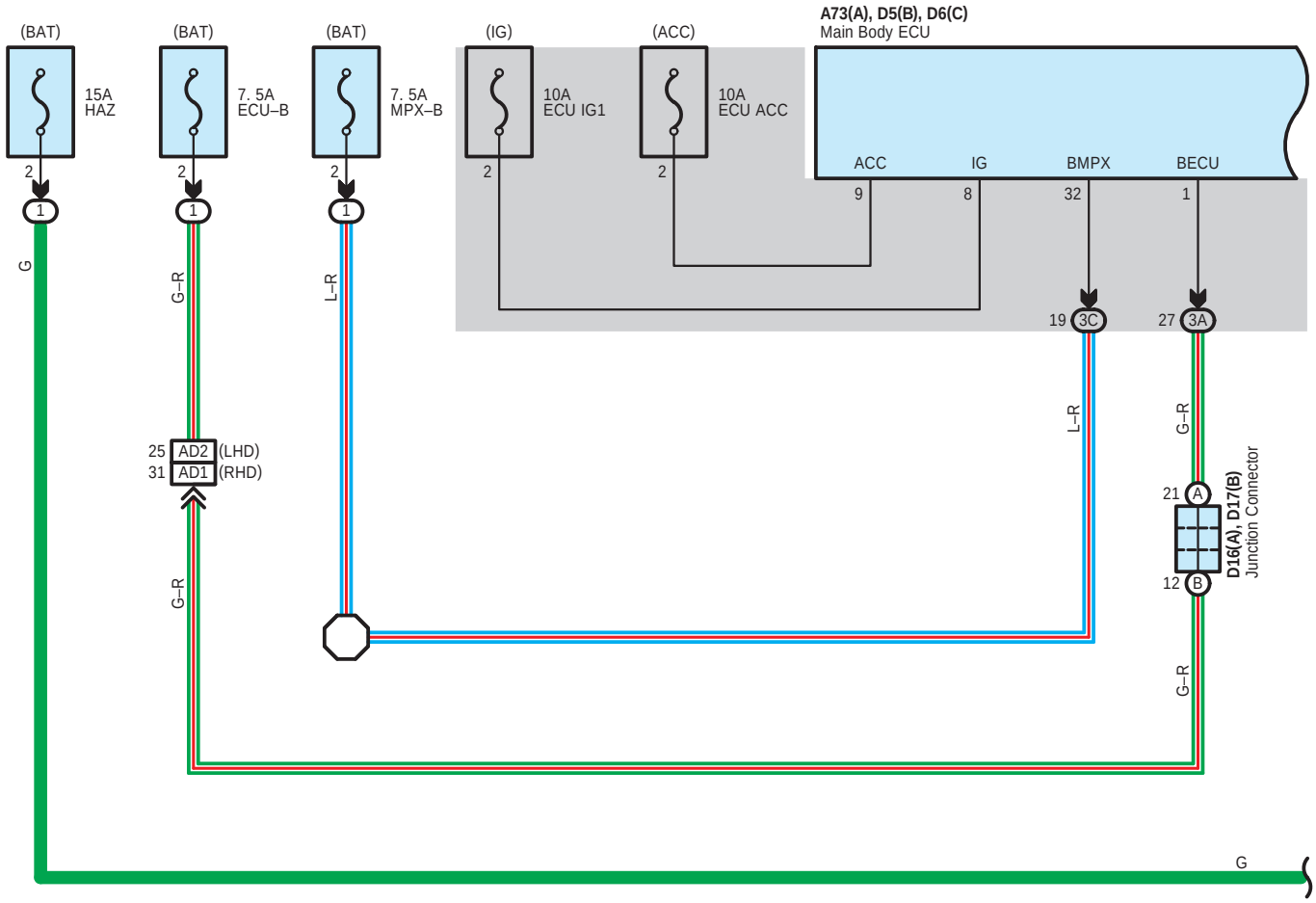
(BAT)
15A
HAZ
(BAT)
7. 5A
ECU–B
(BAT)
7. 5A
MPX–B
(IG)
10A
ECU IG1
(ACC)
10A
ECU ACC
A73(A), D5(B), D6(C)
Main Body ECU
ACC
IG
BMPX
BECU
9
8
32
1
19
3C
27
3A
G
G–R
L–R
25
AD2
(LHD)
31
AD1
(RHD)
21
A
12
B
D16(A), D17(B)
Junction Connector

∗ 1 : w/ A/C

Y(∗1)
G–Y
G(∗1)
L–O(∗1)

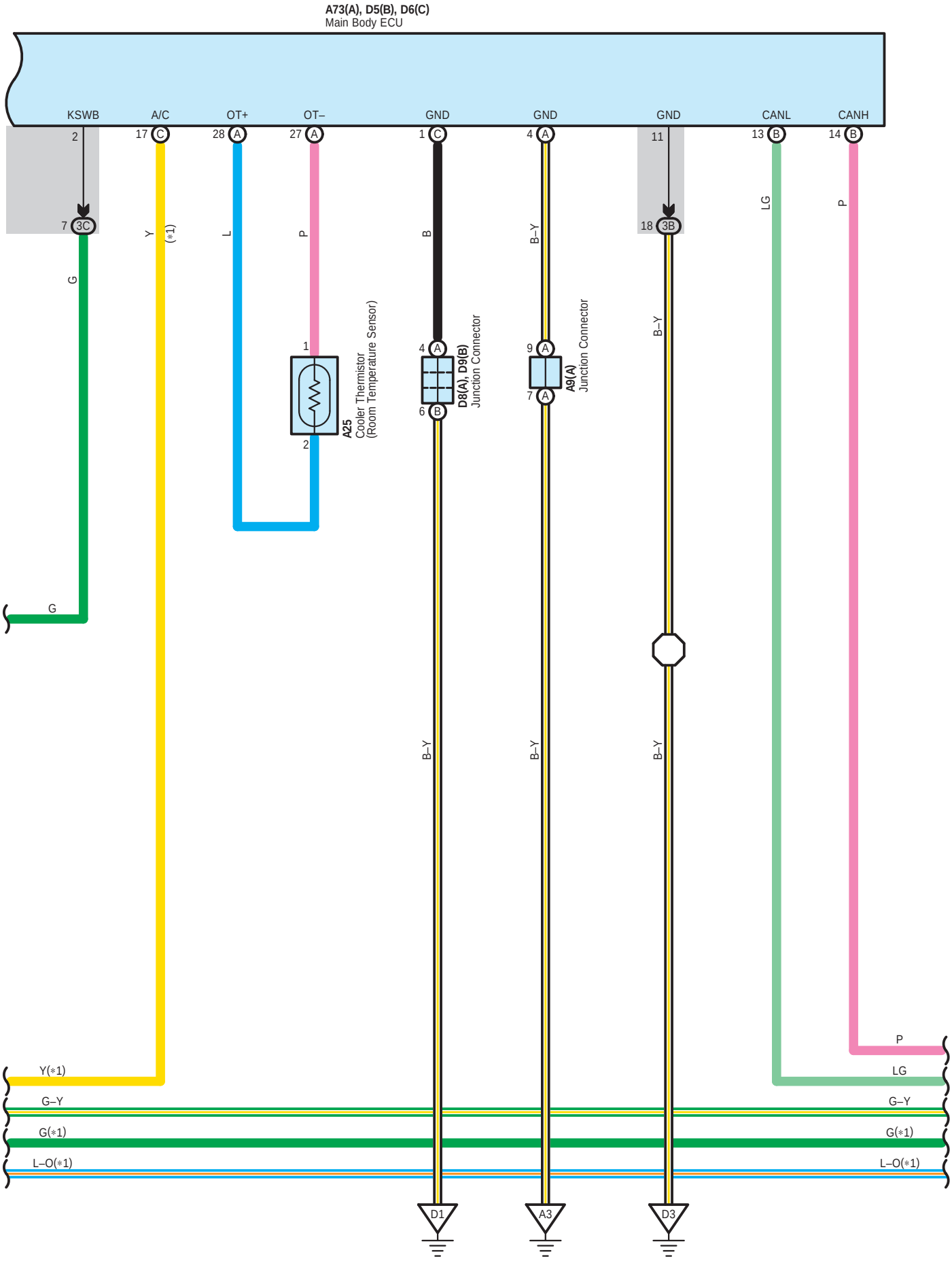
A73(A), D5(B), D6(C)
Main Body ECU
KSWB
A/C
OT+
OT–
GND
GND
GND
CANL
CANH
2
17 C
28 A
27 A
1 C
4 A
11
13 B
14 B
7 3C
18 3B
G
Y
(*1)
L
P
B
B–Y
B–Y
LG
P
1
2
A25
Cooler Thermistor
(Room Temperature Sensor)
4 A
6 B
D8(A), D9(B)
Junction Connector
9 A
7 A
A9(A)
Junction Connector
B–Y
B–Y
B–Y
B–Y
G
Y(*1)
G–Y
G(*1)
L–O(*1)
P
LG
G–Y
G(*1)
L–O(*1)
D1
A3
D3

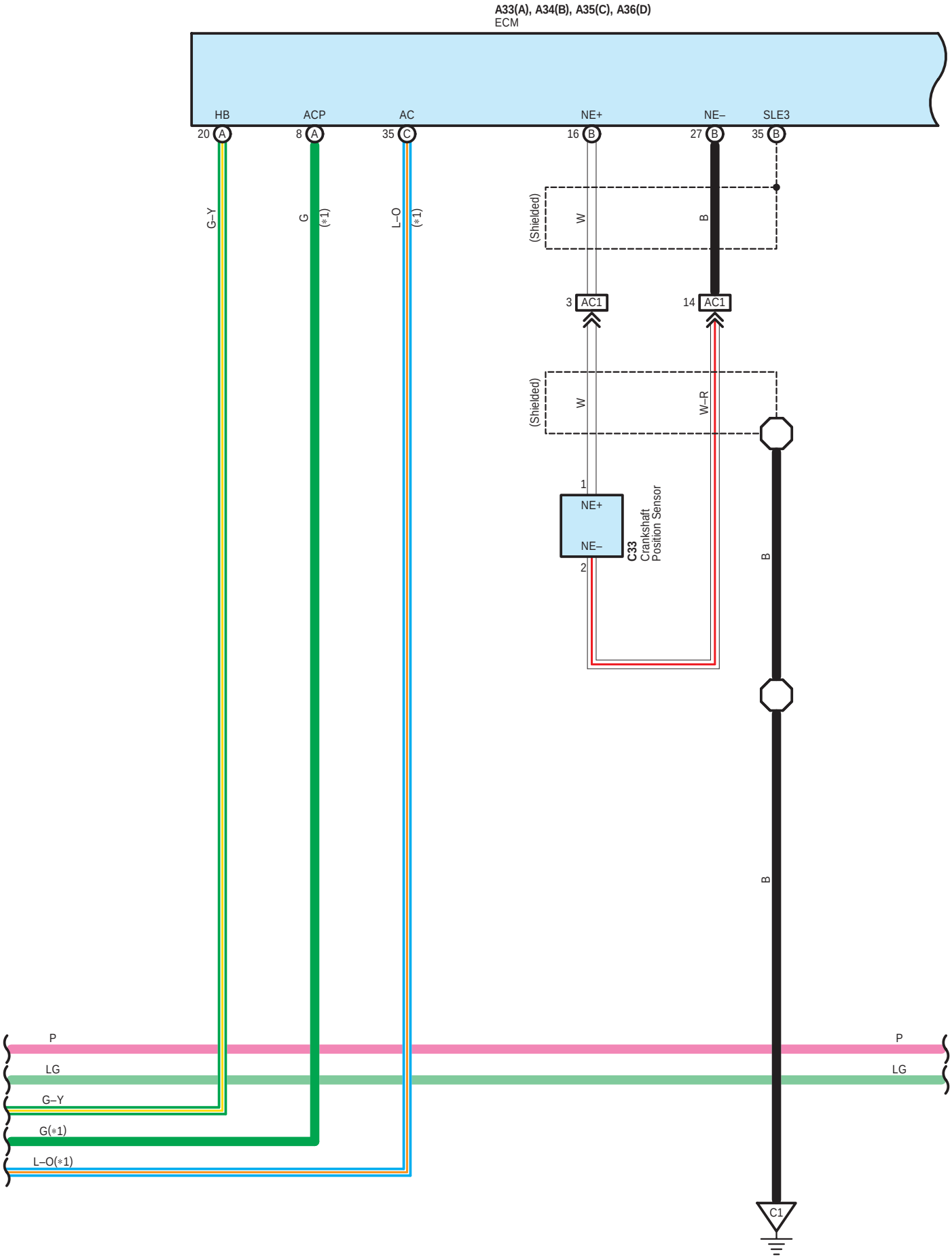
A33(A), A34(B), A35(C), A36(D)
ECM
HB
ACP
AC
NE+
NE–
SLE3
20 A
8 A
35 C
16 B
27 B
35 B
G–Y
G
(*1)
L–O
(*1)
(Shielded)
W
B
3 AC1
14 AC1
(Shielded)
W
W–R
1
NE+
NE–
2
C33
Crankshaft
Position Sensor
B
B
P
LG
G–Y
G(*1)
L–O(*1)
P
LG
C1

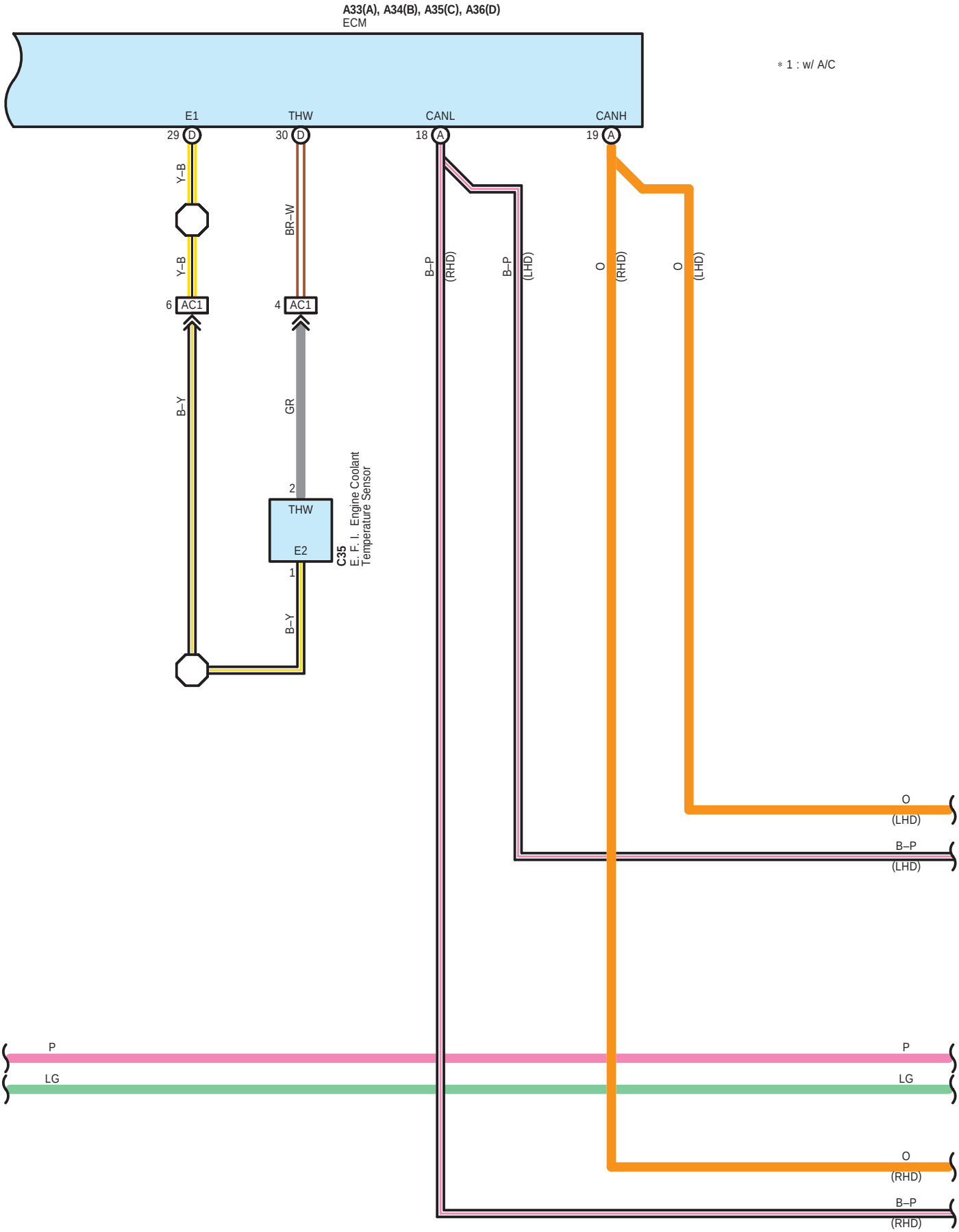
A33(A), A34(B), A35(C), A36(D)
ECM
* 1 : w/ A/C
E1
THW
CANL
CANH
29 D
30 D
18 A
19 A
Y–B
Y–B
BR–W
B–P (RHD)
B–P (LHD)
O (RHD)
O (LHD)
6 AC1
4 AC1
B–Y
GR
2
THW
E2
1
C35
E. F. I. Engine Coolant Temperature Sensor
B–Y
O (LHD)
B–P (LHD)
P
LG
P
LG
O (RHD)
B–P (RHD)

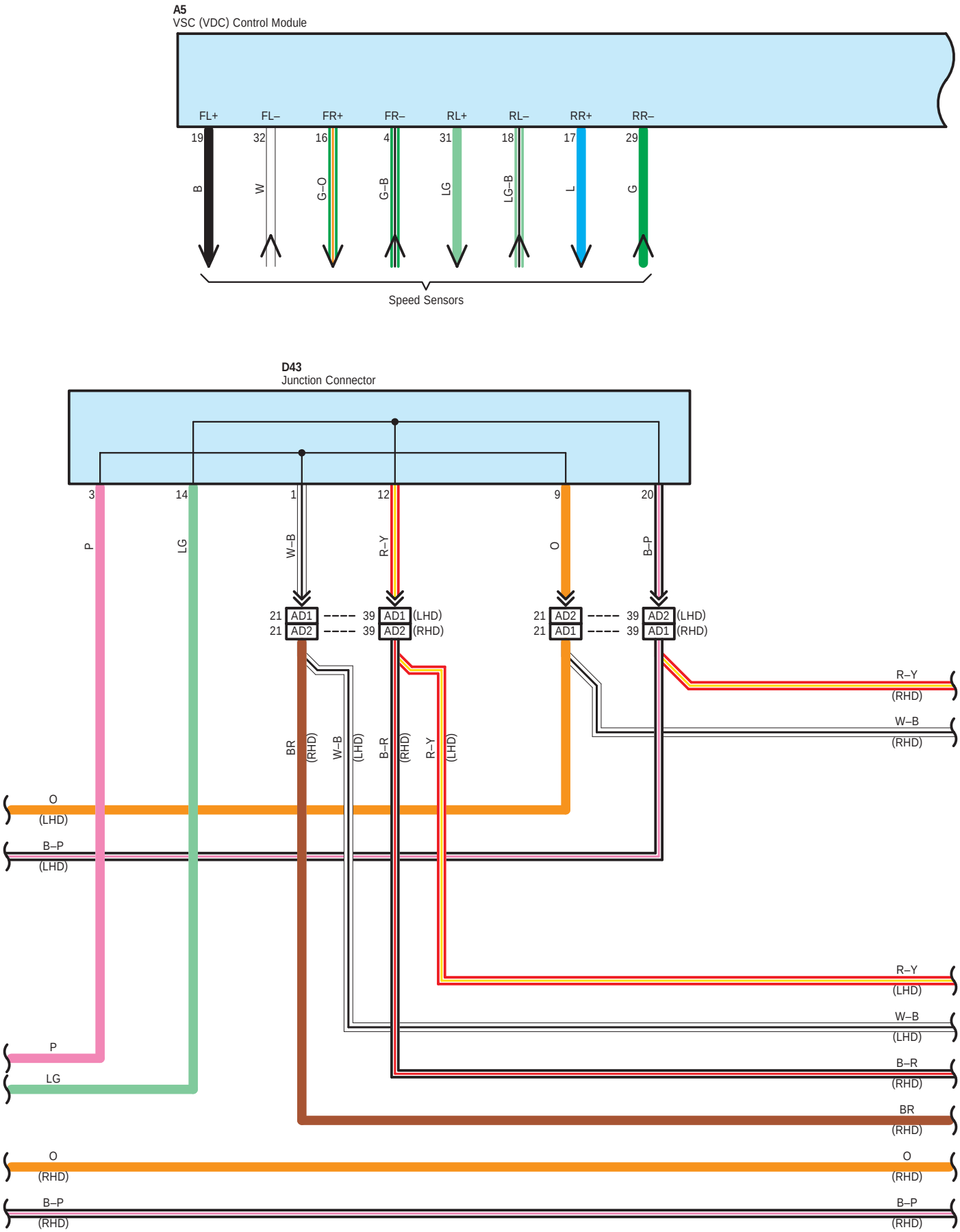
A5
VSC (VDC) Control Module
FL+
FL–
FR+
FR–
RL+
RL–
RR+
RR–
19
32
16
4
31
18
17
29
B
W
G–O
G–B
LG
LG–B
L
G
Speed Sensors
D43
Junction Connector
3
14
1
12
9
20
P
LG
W–B
R–Y
O
B–P
21 AD1 ---- 39 AD1 (LHD)
21 AD2 ---- 39 AD2 (RHD)
21 AD2 ---- 39 AD2 (LHD)
21 AD1 ---- 39 AD1 (RHD)
BR (RHD)
W–B (LHD)
B–R (RHD)
R–Y (LHD)
R–Y (RHD)
W–B (RHD)
O (LHD)
B–P (LHD)
R–Y (LHD)
W–B (LHD)
P
LG
B–R (RHD)
BR (RHD)
O (RHD)
B–P (RHD)
O (RHD)
B–P (RHD)

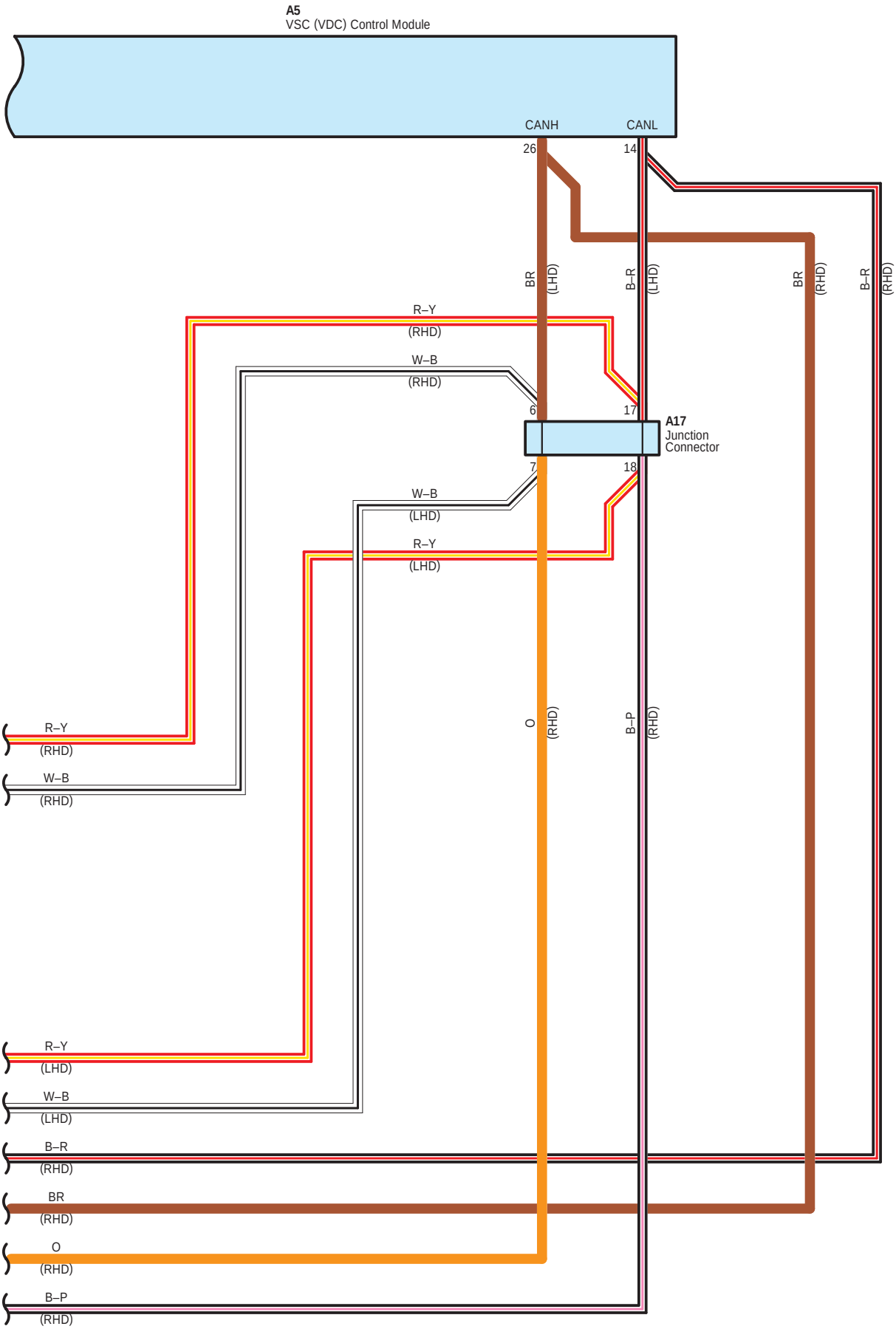
A5
VSC (VDC) Control Module
CANH
CANL
26
14
BR
(LHD)
B–R
(LHD)
BR
(RHD)
B–R
(RHD)
R–Y
(RHD)
W–B
(RHD)
6
17
A17
Junction
Connector
7
18
W–B
(LHD)
R–Y
(LHD)
O
(RHD)
B–P
(RHD)
R–Y
(RHD)
W–B
(RHD)
R–Y
(LHD)
W–B
(LHD)
B–R
(RHD)
BR
(RHD)
O
(RHD)
B–P
(RHD)

○ : **Parts Location**

Code		See Page	Code		See Page	Code		See Page
A5		39 (LHD)	A34	B	42 (LHD)	D9	B	40 (LHD)
		47 (RHD)			50 (RHD)			48 (RHD)
A7		39 (LHD)	A35	C	42 (LHD)	D16	A	40 (LHD)
		47 (RHD)			50 (RHD)			48 (RHD)
A9	A	42 (LHD)	A36	D	42 (LHD)	D17	B	40 (LHD)
		50 (RHD)			50 (RHD)			48 (RHD)
A10	B	42 (LHD)	A73	A	42 (LHD)	D21		40 (LHD)
		50 (RHD)			50 (RHD)			48 (RHD)
A17		42 (LHD)	C17		38 (LHD)	D23		40 (LHD)
		50 (RHD)			46 (RHD)			48 (RHD)
A25		42 (LHD)	C33		38 (LHD)	D24		40 (LHD)
		50 (RHD)			46 (RHD)			48 (RHD)
A26		42 (LHD)	C35		38 (LHD)	D43		41 (LHD)
		50 (RHD)			46 (RHD)			49 (RHD)
A31		42 (LHD)	D5	B	40 (LHD)	D46	A	41 (LHD)
		50 (RHD)			48 (RHD)			49 (RHD)
A32		42 (LHD)	D6	C	40 (LHD)	D47	B	41 (LHD)
		50 (RHD)			48 (RHD)			49 (RHD)
A33	A	42 (LHD)	D8	A	40 (LHD)			
		50 (RHD)			48 (RHD)			

: **Relay Blocks**

Code	See Page	Relay Blocks (Relay Block Location)
1	24	Engine Room R/B (Engine Compartment Right)
2	25	R/B No. 2 (Behind Glove Box)

: **Junction Block and Wire Harness Connector**

Code	See Page	Junction Block and Wire Harness (Connector Location)
3A	26	Instrument Panel Wire and Instrument Panel J/B Assembly (Instrument Panel Reinforcement)
3B		
3C	26	Engine Room Main Wire and Instrument Panel J/B Assembly (Instrument Panel Reinforcement)

: **Connector Joining Wire Harness and Wire Harness**

Code	See Page	Joining Wire Harness and Wire Harness (Connector Location)
AC1	54 (LHD)	Engine Room Main Wire and Engine Wire (Engine Unit)
	58 (RHD)	
AD1	55 (LHD)	Engine Room Main Wire and Instrument Panel Wire (Cowl Side Panel RH)
	59 (RHD)	
AD2	55 (LHD)	Engine Room Main Wire and Instrument Panel Wire (Instrument Panel Reinforcement)
	59 (RHD)	
DA2	55 (LHD)	Instrument Panel Wire and Engine Room Main Wire (Around A/C Unit)
	59 (RHD)	

▽ : **Ground Points**

Code	See Page	Ground Points Location
A1	54 (LHD)	Front Fender Apron LH
	58 (RHD)	
A3	55 (LHD)	Cowl Side Panel RH
	59 (RHD)	Cowl Side Panel LH
A7	54 (LHD)	Front Fender Apron RH
	58 (RHD)	
C1	54 (LHD)	Engine Unit
	58 (RHD)	
D1	55 (LHD)	Cowl Side Panel LH
	59 (RHD)	Cowl Side Panel RH
D3	55 (LHD)	Instrument Panel Brace RH

▽ : **Ground Points**

Code	See Page	Ground Points Location
D3	59 (RHD)	Instrument Panel Brace LH

Option Connector

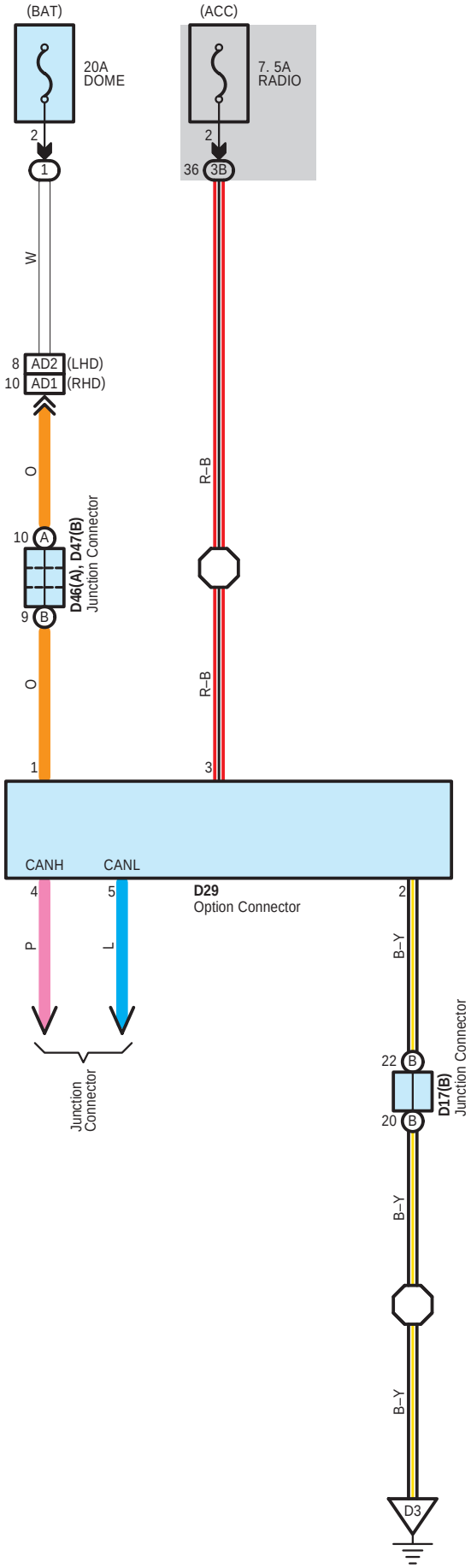

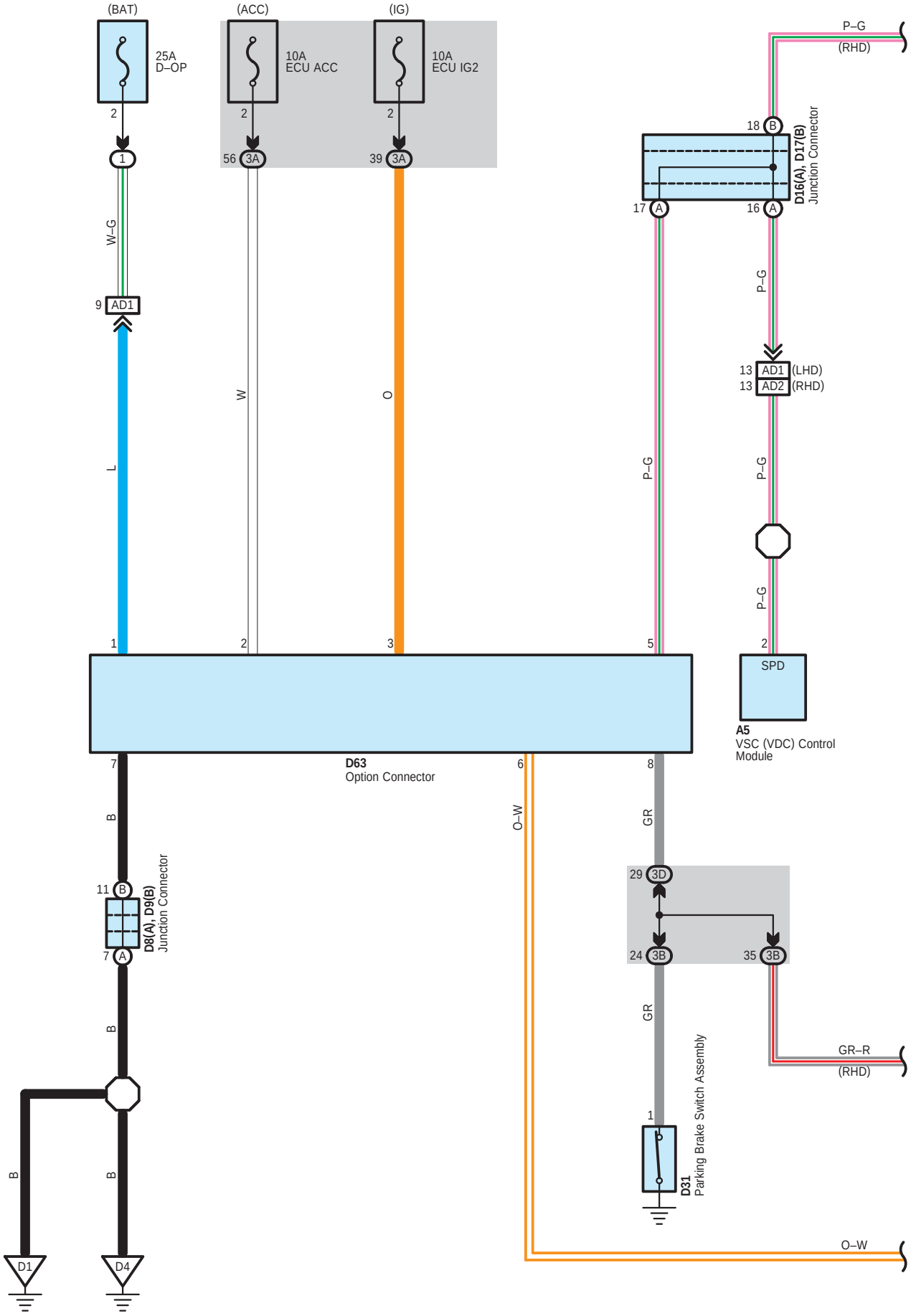
(BAT)
25A
D–OP
(ACC)
10A
ECU ACC
(IG)
10A
ECU IG2
P–G
(RHD)
D16(A), D17(B)
Junction Connector
W–G
AD1
L
W
O
P–G
AD1 (LHD)
AD2 (RHD)
SPD
A5
VSC (VDC) Control
Module
D63
Option Connector
B
O–W
GR
D8(A), D9(B)
Junction Connector
D31
Parking Brake Switch Assembly
GR–R
(RHD)
D1
D4

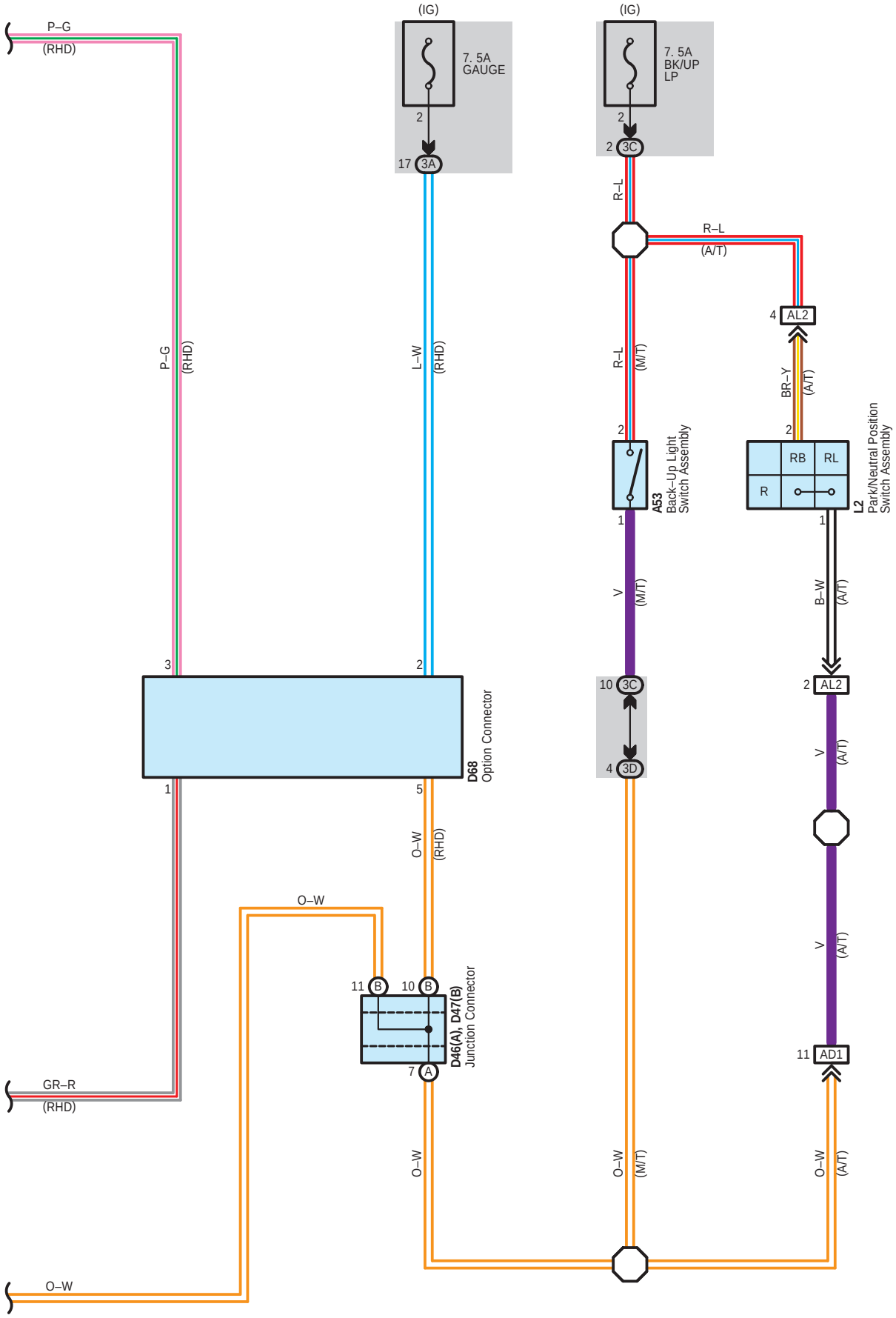
P–G
(RHD)
(IG)
7. 5A
GAUGE
2
17 3A
(IG)
7. 5A
BK/UP
LP
2
2 3C
R–L
R–L
(A/T)
4 AL2
P–G
(RHD)
L–W
(RHD)
R–L
(M/T)
BR–Y
(A/T)
2
A53
Back–Up Light
Switch Assembly
2
RB
RL
R
L2
Park/Neutral Position
Switch Assembly
1
1
V
(M/T)
B–W
(A/T)
3
2
D68
Option Connector
10 3C
4 3D
2 AL2
1
5
V
(A/T)
O–W
(RHD)
O–W
V
(A/T)
11 B
10 B
D46(A), D47(B)
Junction Connector
7 A
11 AD1
GR–R
(RHD)
O–W
O–W
(M/T)
O–W
(A/T)
O–W

○ : Parts Location

Code		See Page	Code		See Page	Code		See Page
A5		39 (LHD)	D16	A	48 (RHD)	D47	B	41 (LHD)
		47 (RHD)	D17	B	40 (LHD)			49 (RHD)
A53		39 (LHD)			48 (RHD)	D63		41 (LHD)
		47 (RHD)	D29		40 (LHD)			49 (RHD)
D8	A	40 (LHD)			48 (RHD)	D68		49 (RHD)
		48 (RHD)	D31		40 (LHD)	L2		39 (LHD)
D9	B	40 (LHD)			48 (RHD)			47 (RHD)
		48 (RHD)	D46	A	41 (LHD)			
D16	A	40 (LHD)			49 (RHD)			

⬭ : Relay Blocks

Code	See Page	Relay Blocks (Relay Block Location)
1	24	Engine Room R/B (Engine Compartment Right)

⬭ : Junction Block and Wire Harness Connector

Code	See Page	Junction Block and Wire Harness (Connector Location)
3A	26	Instrument Panel Wire and Instrument Panel J/B Assembly (Instrument Panel Reinforcement)
3B		
3C	26	Engine Room Main Wire and Instrument Panel J/B Assembly (Instrument Panel Reinforcement)
3D	26	Instrument Panel Wire and Instrument Panel J/B Assembly (Instrument Panel Reinforcement)

▭ : Connector Joining Wire Harness and Wire Harness

Code	See Page	Joining Wire Harness and Wire Harness (Connector Location)
AD1	55 (LHD)	Engine Room Main Wire and Instrument Panel Wire (Cowl Side Panel RH)
	59 (RHD)	
AD2	55 (LHD)	Engine Room Main Wire and Instrument Panel Wire (Instrument Panel Reinforcement)
	59 (RHD)	
AL2	54 (LHD)	Engine Room Main Wire and Transmission Wire (Dash Panel)
	58 (RHD)	

▽ : Ground Points

Code	See Page	Ground Points Location
D1	55 (LHD)	Cowl Side Panel LH
	59 (RHD)	Cowl Side Panel RH
D3	55 (LHD)	Instrument Panel Brace RH
	59 (RHD)	Instrument Panel Brace LH
D4	55 (LHD)	Cowl Side Panel RH
	59 (RHD)	Cowl Side Panel LH

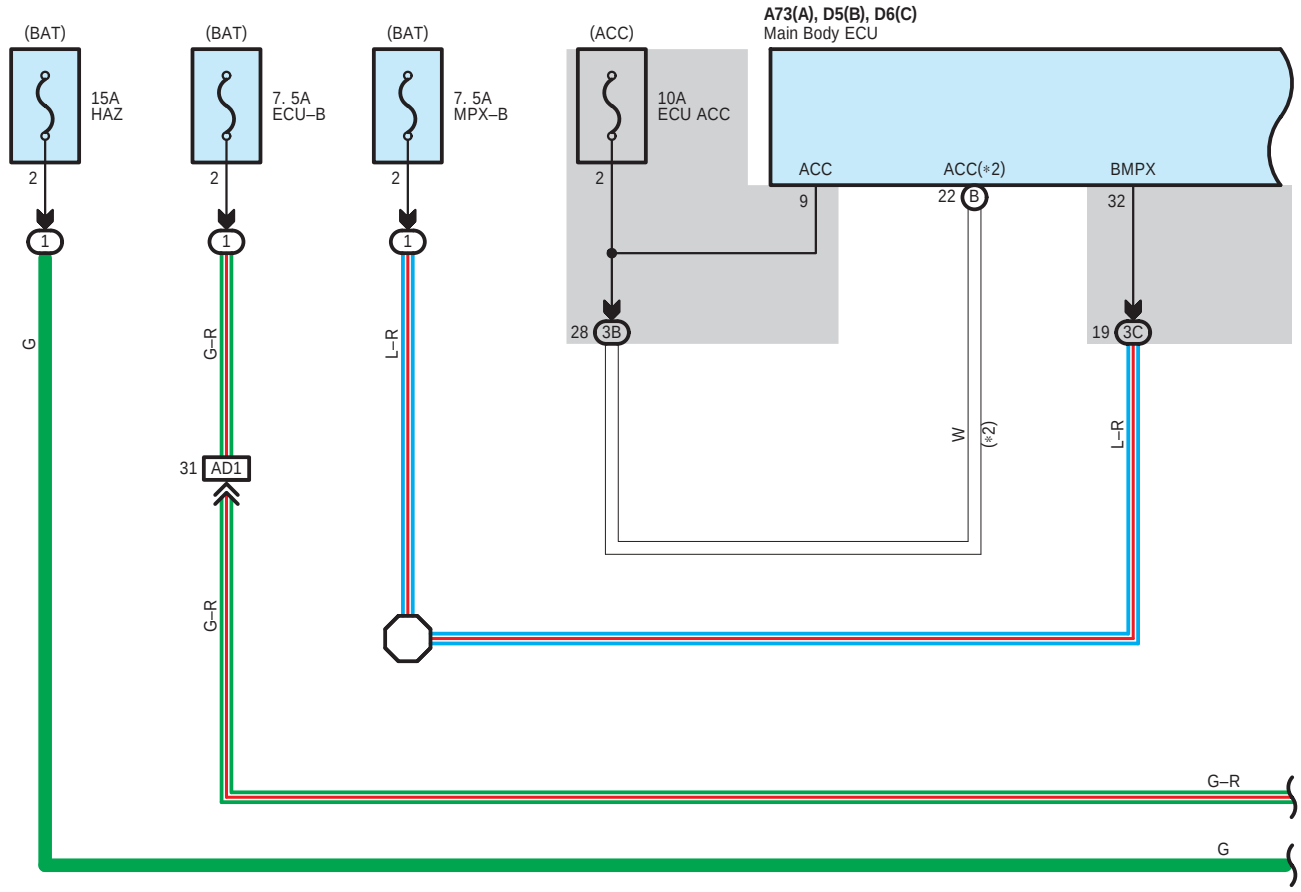

* 2 : w/ Entry & Start System

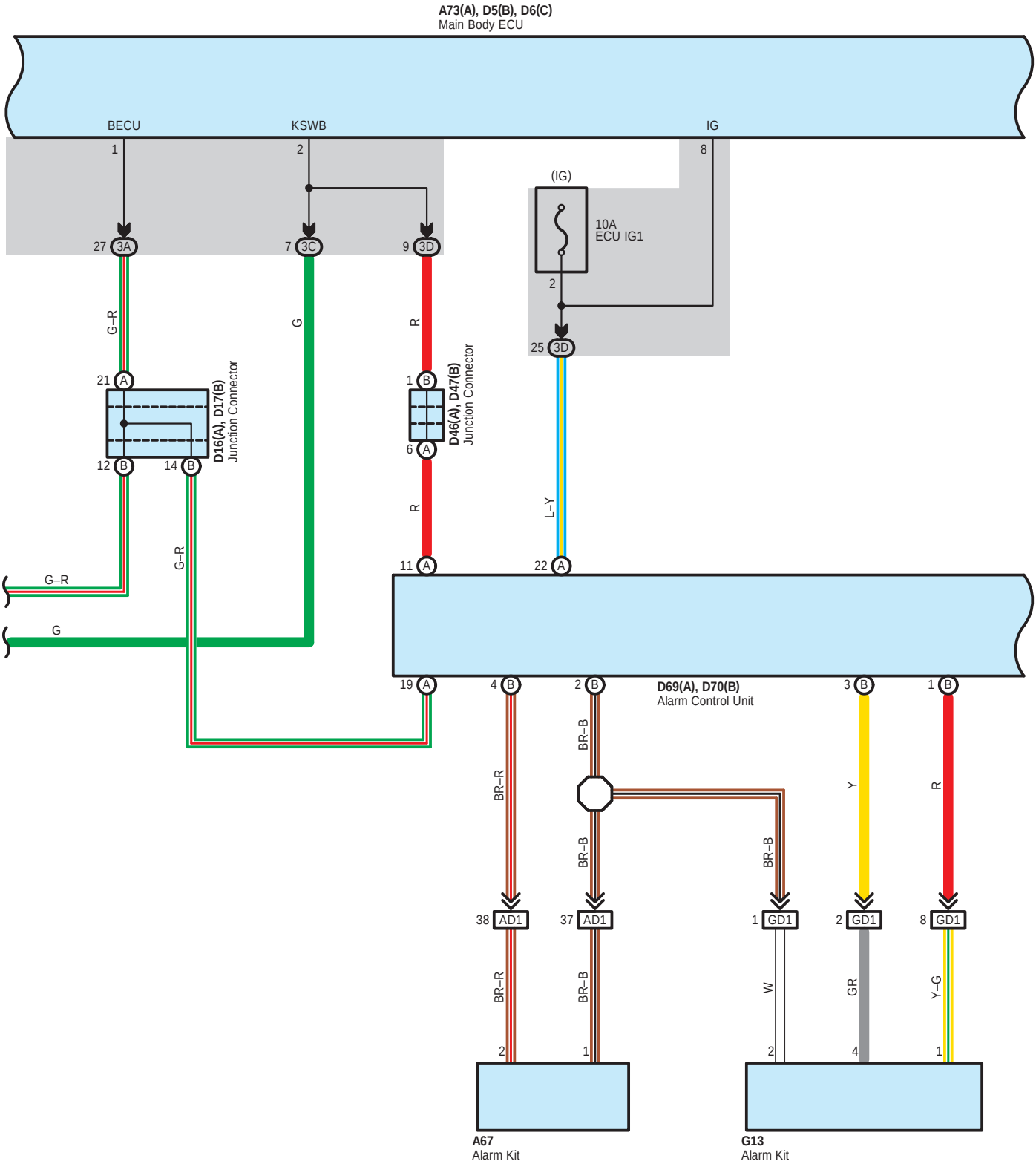
A73(A), D5(B), D6(C)
Main Body ECU
BECU
KSWB
IG
1
2
8
(IG)
10A
ECU IG1
2
27 3A
7 3C
9 3D
25 3D
G–R
G
R
L–Y
21 A
12 B
14 B
D16(A), D17(B)
Junction Connector
1 B
6 A
D46(A), D47(B)
Junction Connector
R
11 A
22 A
G–R
G–R
G
19 A
4 B
2 B
3 B
1 B
D69(A), D70(B)
Alarm Control Unit
BR–R
BR–B
BR–B
BR–B
Y
R
38 AD1
37 AD1
1 GD1
2 GD1
8 GD1
BR–R
BR–B
W
GR
Y–G
2
1
2
4
1
A67
Alarm Kit
G13
Alarm Kit

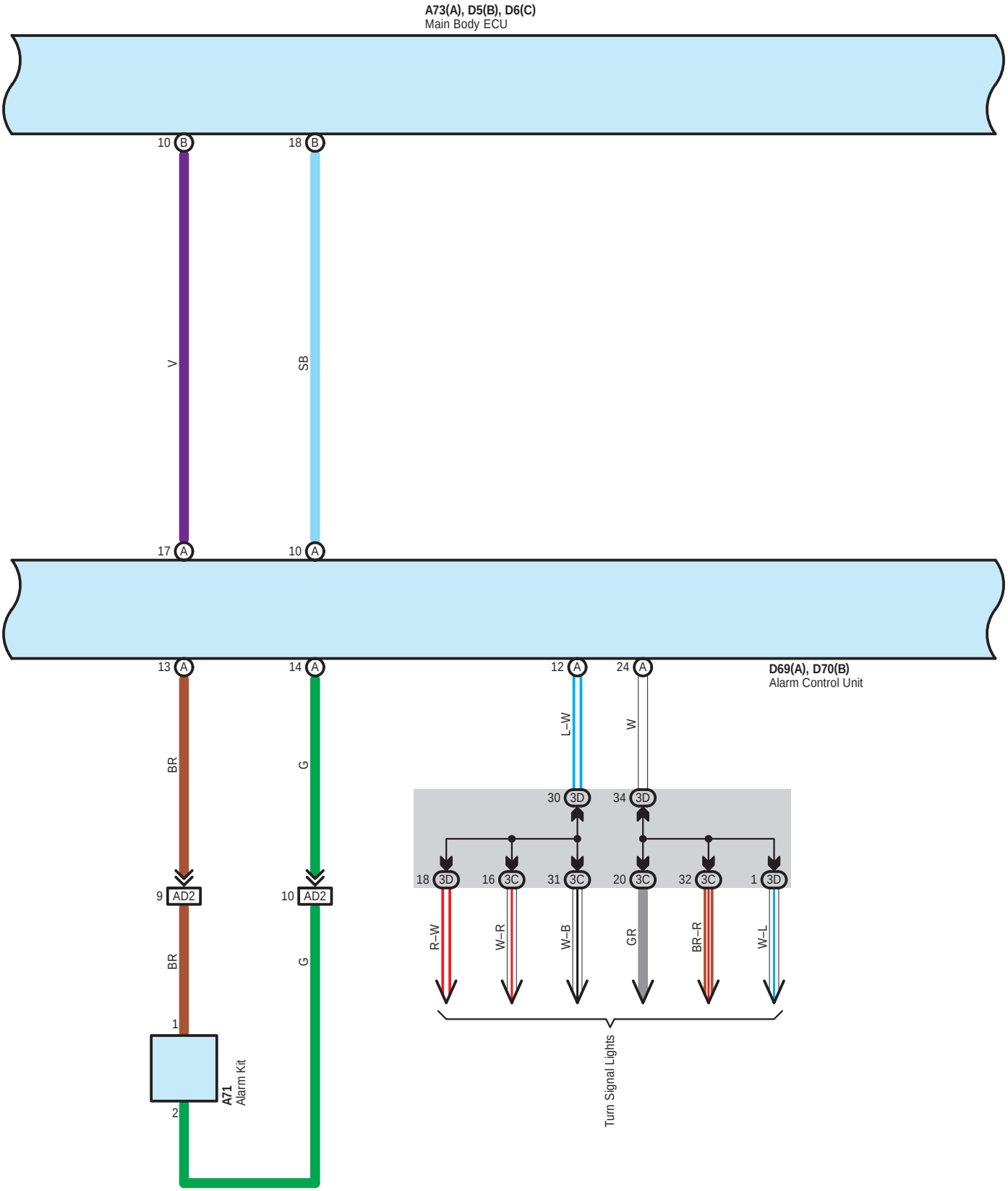
A73(A), D5(B), D6(C)
Main Body ECU
10 B
18 B
V
SB
17 A
10 A
13 A
14 A
12 A
24 A
D69(A), D70(B)
Alarm Control Unit
BR
G
L–W
W
30 3D
34 3D
9 AD2
10 AD2
18 3D
16 3C
31 3C
20 3C
32 3C
1 3D
BR
G
R–W
W–R
W–B
GR
BR–R
W–L
1
2
A71
Alarm Kit
Turn Signal Lights

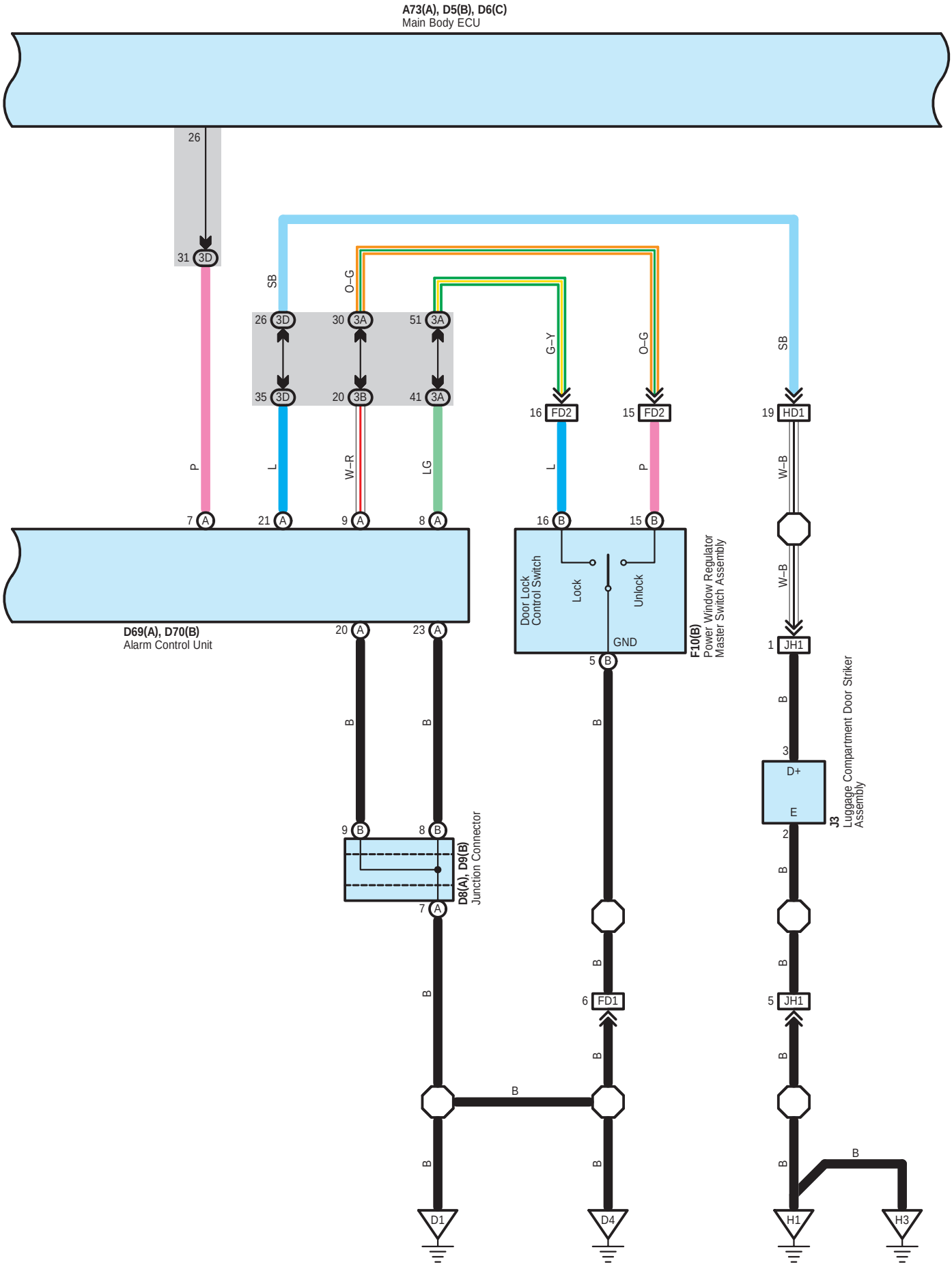
A73(A), D5(B), D6(C)
Main Body ECU
26
31 3D
SB
O–G
26 3D
30 3A
51 3A
35 3D
20 3B
41 3A
G–Y
O–G
SB
16 FD2
15 FD2
19 HD1
P
L
W–R
LG
L
P
W–B
7 A
21 A
9 A
8 A
16 B
15 B
D69(A), D70(B)
Alarm Control Unit
20 A
23 A
Door Lock
Control Switch
Lock
Unlock
GND
F10(B)
Power Window Regulator
Master Switch Assembly
5 B
W–B
1 JH1
B
B
B
3
D+
E
J3
Luggage Compartment Door Striker
Assembly
9 B
8 B
D8(A), D9(B)
Junction Connector
7 A
2
B
B
B
6 FD1
5 JH1
B
B
B
B
B
B
B
B
D1
D4
H1
H3

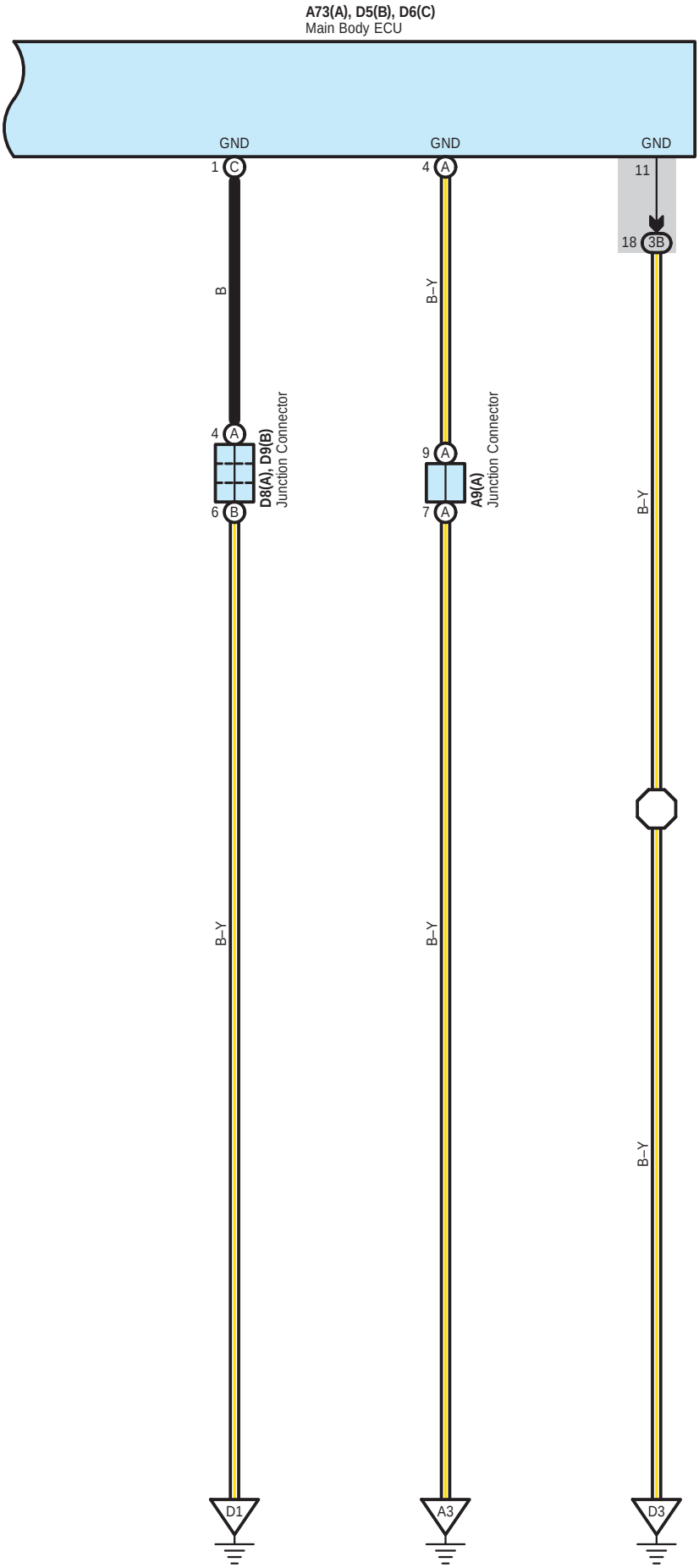
A73(A), D5(B), D6(C)
Main Body ECU
GND
GND
GND
1 C
4 A
11
18 3B
B
B–Y
B–Y
4 A
6 B
D8(A), D9(B)
Junction Connector
9 A
7 A
A9(A)
Junction Connector
B–Y
B–Y
B–Y
D1
A3
D3

○ : **Parts Location**

Code		See Page	Code		See Page	Code		See Page
A9	A	50 (RHD)	D8	A	48 (RHD)	D69	A	49 (RHD)
A67		47 (RHD)	D9	B	48 (RHD)	D70	B	49 (RHD)
A71		50 (RHD)	D16	A	48 (RHD)	F10	B	52 (RHD)
A73	A	50 (RHD)	D17	B	48 (RHD)	G13		52 (RHD)
D5	B	48 (RHD)	D46	A	49 (RHD)	J3		53 (RHD)
D6	C	48 (RHD)	D47	B	49 (RHD)			

▭ : **Relay Blocks**

Code	See Page	Relay Blocks (Relay Block Location)
1	24	Engine Room R/B (Engine Compartment Right)

▭ : **Junction Block and Wire Harness Connector**

Code	See Page	Junction Block and Wire Harness (Connector Location)
3A	26	Instrument Panel Wire and Instrument Panel J/B Assembly (Instrument Panel Reinforcement)
3B		
3C	26	Engine Room Main Wire and Instrument Panel J/B Assembly (Instrument Panel Reinforcement)
3D	26	Instrument Panel Wire and Instrument Panel J/B Assembly (Instrument Panel Reinforcement)

▭ : **Connector Joining Wire Harness and Wire Harness**

Code	See Page	Joining Wire Harness and Wire Harness (Connector Location)
AD1	59 (RHD)	Engine Room Main Wire and Instrument Panel Wire (Cowl Side Panel RH)
AD2	59 (RHD)	Engine Room Main Wire and Instrument Panel Wire (Instrument Panel Reinforcement)
FD1	59 (RHD)	Front Door Wire RH and Instrument Panel Wire (Cowl Side Panel RH)
FD2		
GD1	59 (RHD)	No. 1 Floor Wire and Instrument Panel Wire (Cowl Side Panel RH)
HD1	59 (RHD)	No. 2 Floor Wire and Instrument Panel Wire (Cowl Side Panel LH)
JH1	60 (RHD)	Luggage Room Wire and No. 2 Floor Wire (Quarter Panel LH)

▽ : **Ground Points**

Code	See Page	Ground Points Location
A3	59 (RHD)	Cowl Side Panel LH
D1	59 (RHD)	Cowl Side Panel RH
D3	59 (RHD)	Instrument Panel Brace LH
D4	59 (RHD)	Cowl Side Panel LH
H1	60 (RHD)	Lower Back Panel
H3	60 (RHD)	Quarter Wheel House Panel LH

I GROUND POINT

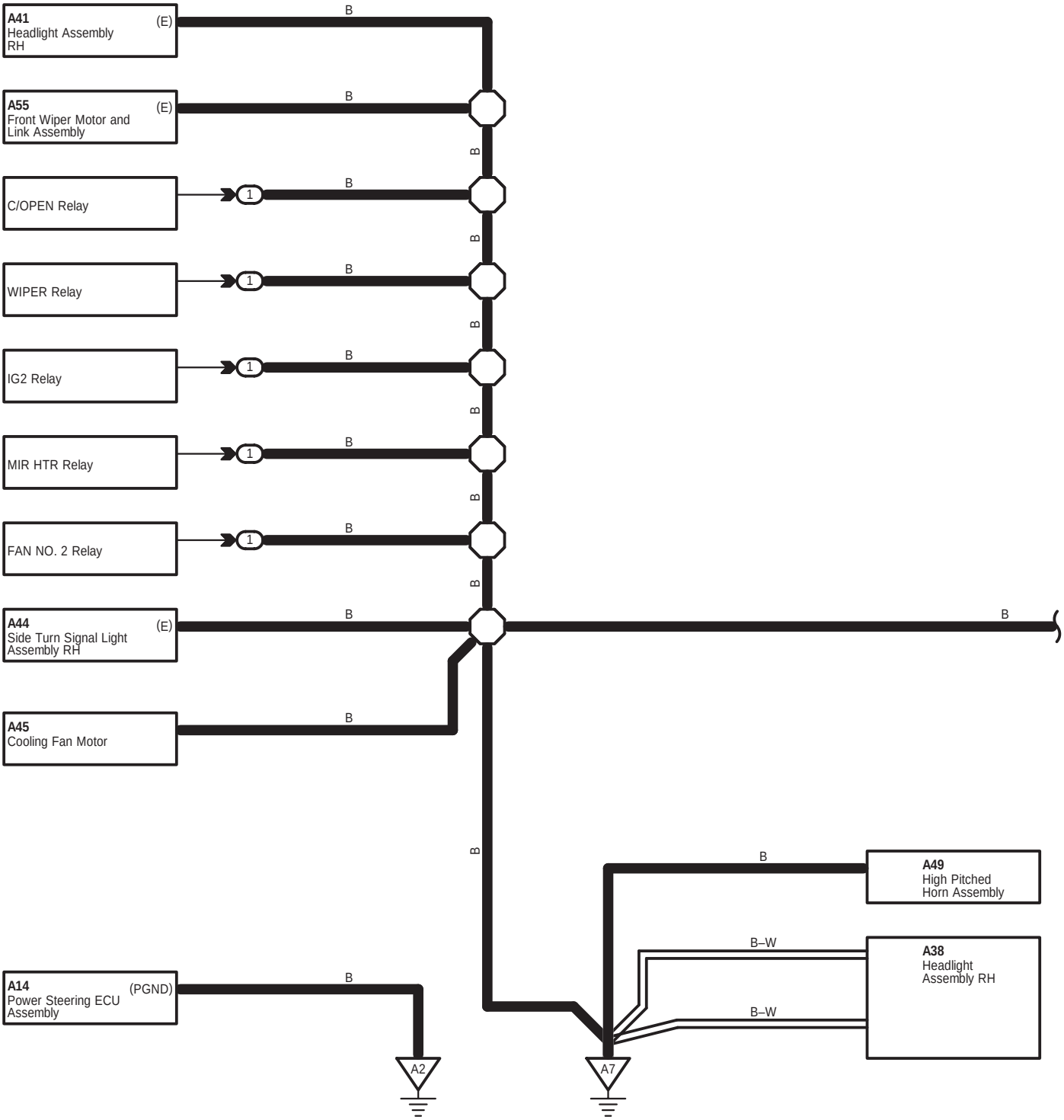

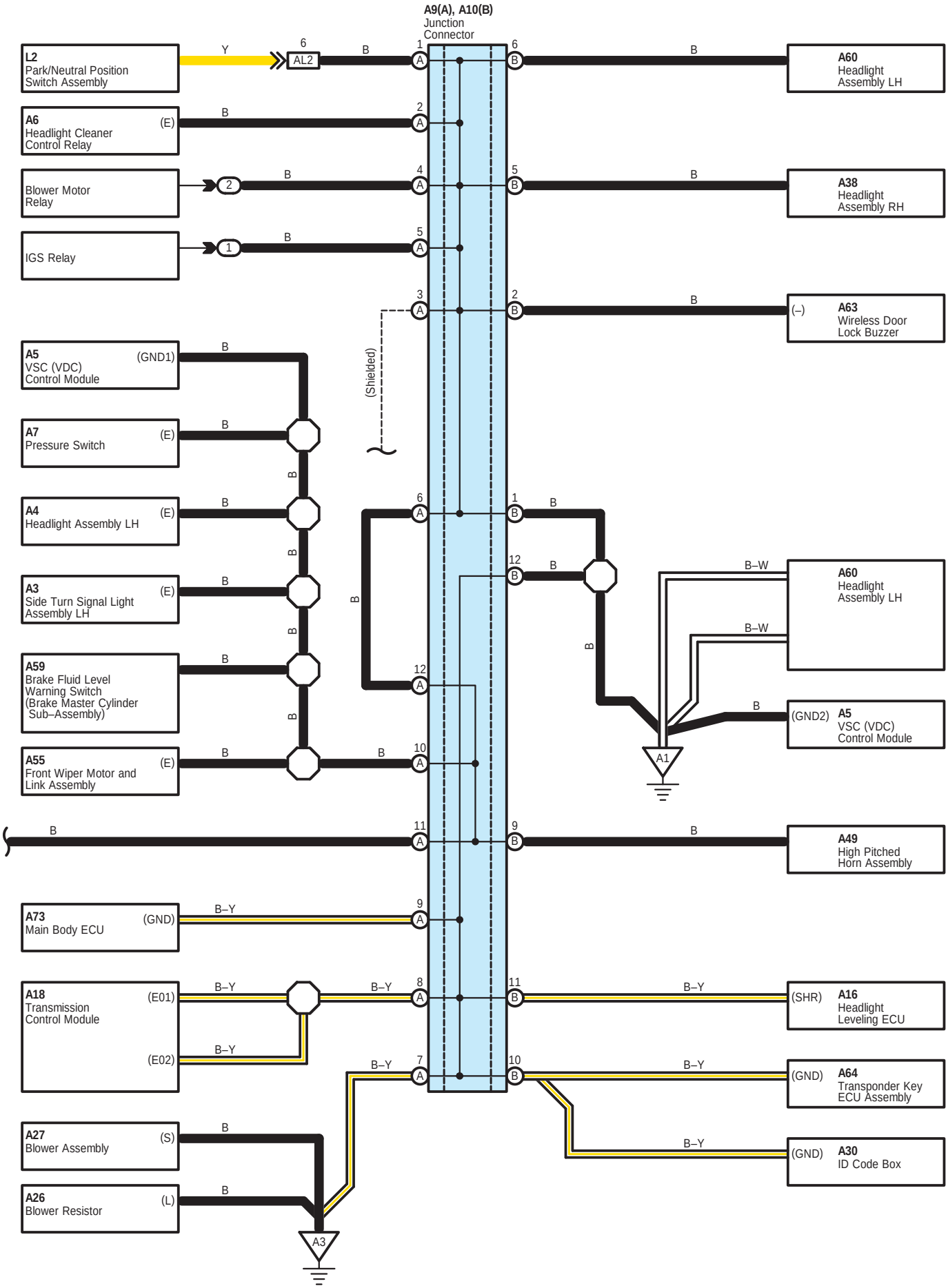
A9(A), A10(B)
Junction
Connector
L2
Park/Neutral Position
Switch Assembly
AL2
A60
Headlight
Assembly LH
A6
Headlight Cleaner
Control Relay
(E)
Blower Motor
Relay
A38
Headlight
Assembly RH
IGS Relay
(–)
A63
Wireless Door
Lock Buzzer
(Shielded)
A5
VSC (VDC)
Control Module
(GND1)
A7
Pressure Switch
A4
Headlight Assembly LH
A3
Side Turn Signal Light
Assembly LH
A59
Brake Fluid Level
Warning Switch
(Brake Master Cylinder
Sub–Assembly)
A55
Front Wiper Motor and
Link Assembly
A1
(GND2)
A49
High Pitched
Horn Assembly
A73
Main Body ECU
(GND)
A18
Transmission
Control Module
(E01)
(E02)
(SHR)
A16
Headlight
Leveling ECU
A64
Transponder Key
ECU Assembly
A27
Blower Assembly
(S)
A26
Blower Resistor
(L)
A30
ID Code Box
A3

I GROUND POINT

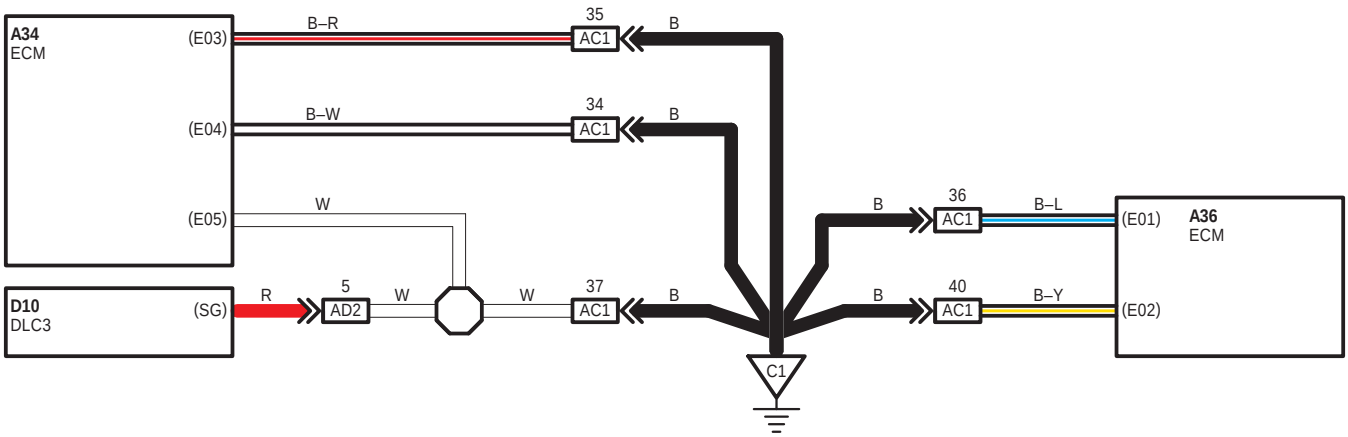

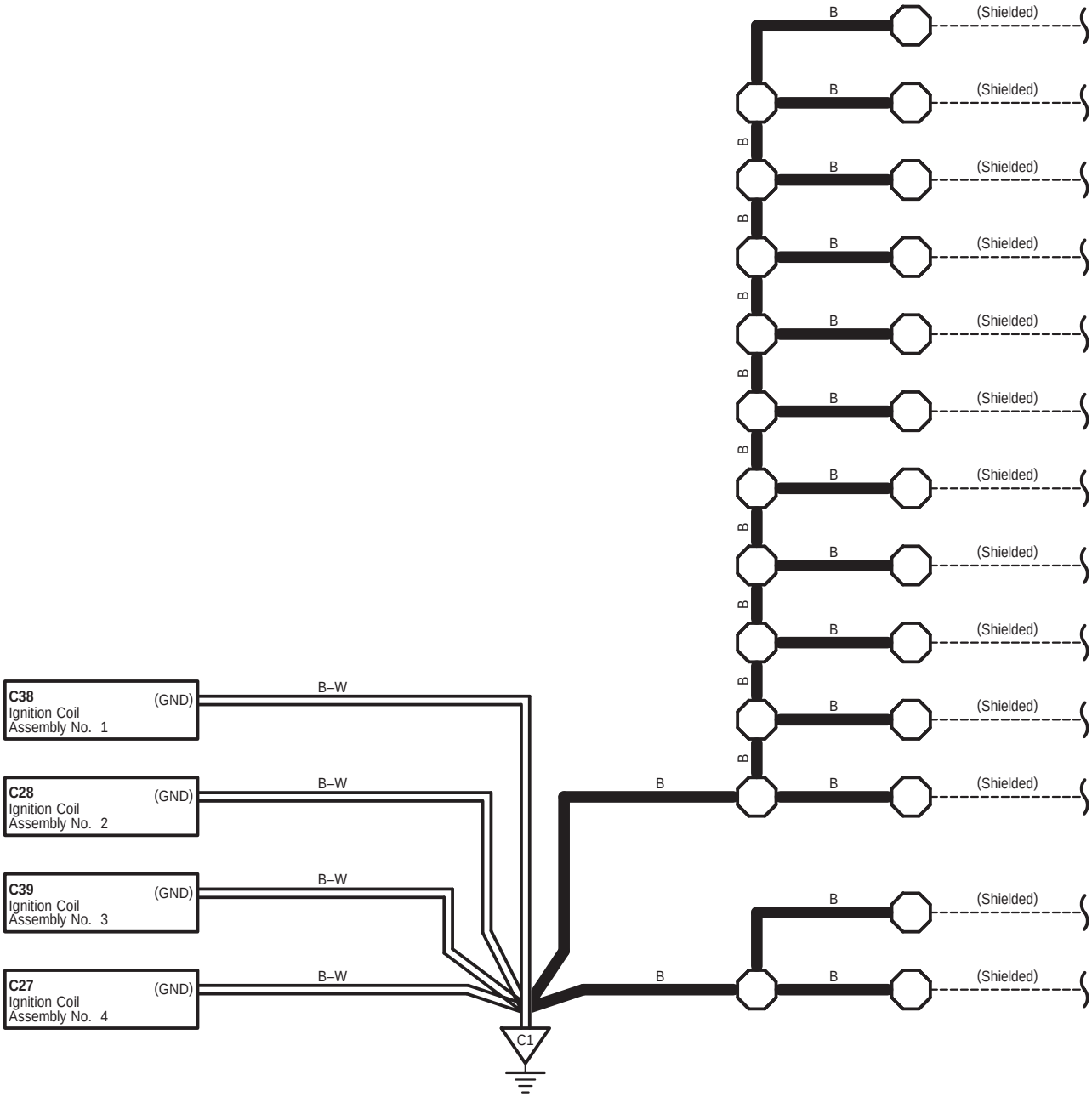

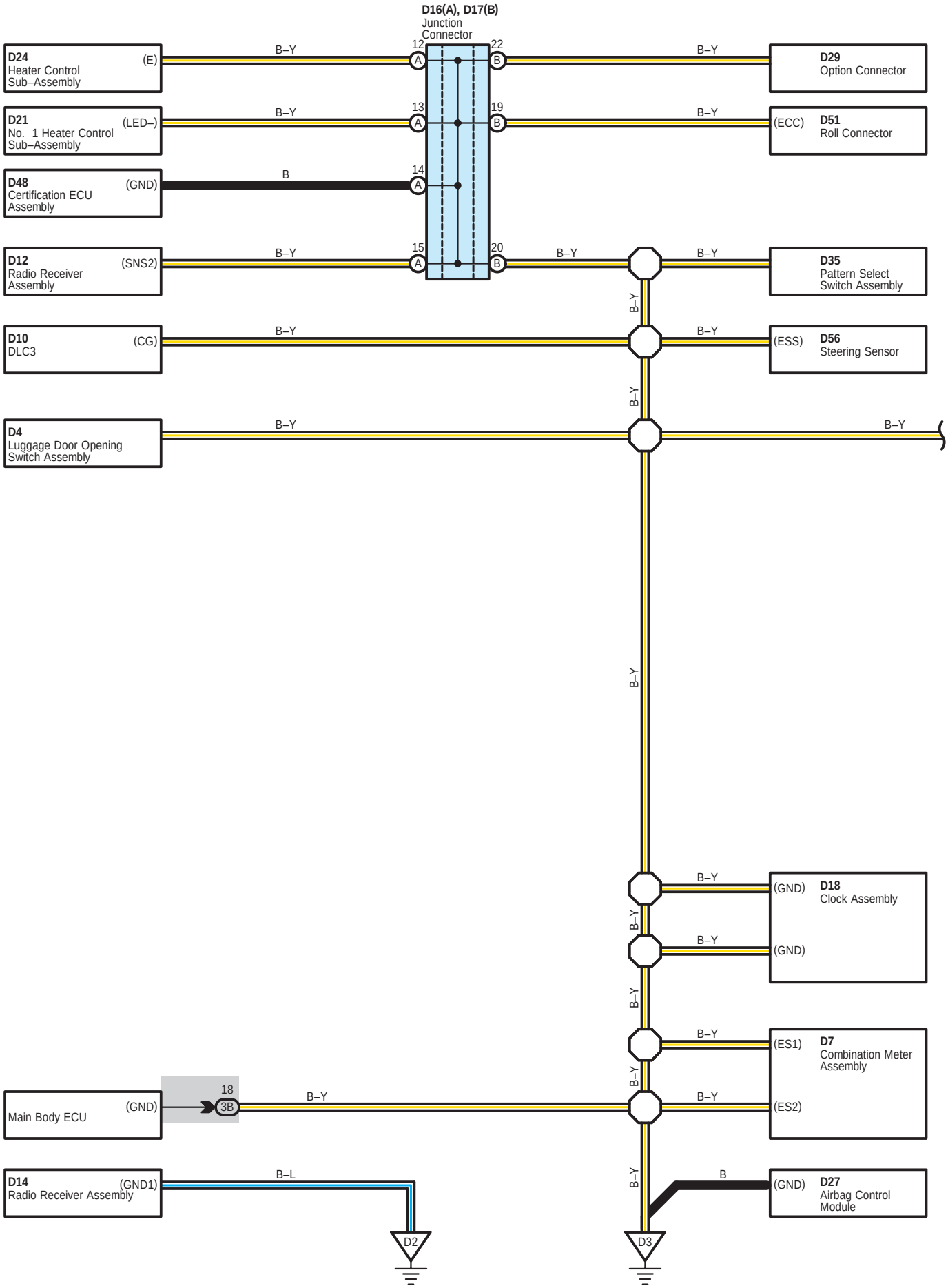
D16(A), D17(B)
Junction Connector
D24
Heater Control Sub–Assembly
(E)
D21
No. 1 Heater Control Sub–Assembly
(LED–)
D48
Certification ECU Assembly
(GND)
D12
Radio Receiver Assembly
(SNS2)
D10
DLC3
(CG)
D4
Luggage Door Opening Switch Assembly
D29
Option Connector
D51
Roll Connector
(ECC)
D35
Pattern Select Switch Assembly
D56
Steering Sensor
(ESS)
D18
Clock Assembly
(GND)
D7
Combination Meter Assembly
(ES1)
(ES2)
D27
Airbag Control Module
Main Body ECU
(GND)
D14
Radio Receiver Assembly
(GND1)
B–Y
B
B–L
12
13
14
15
22
19
20
18
3B
D2
D3

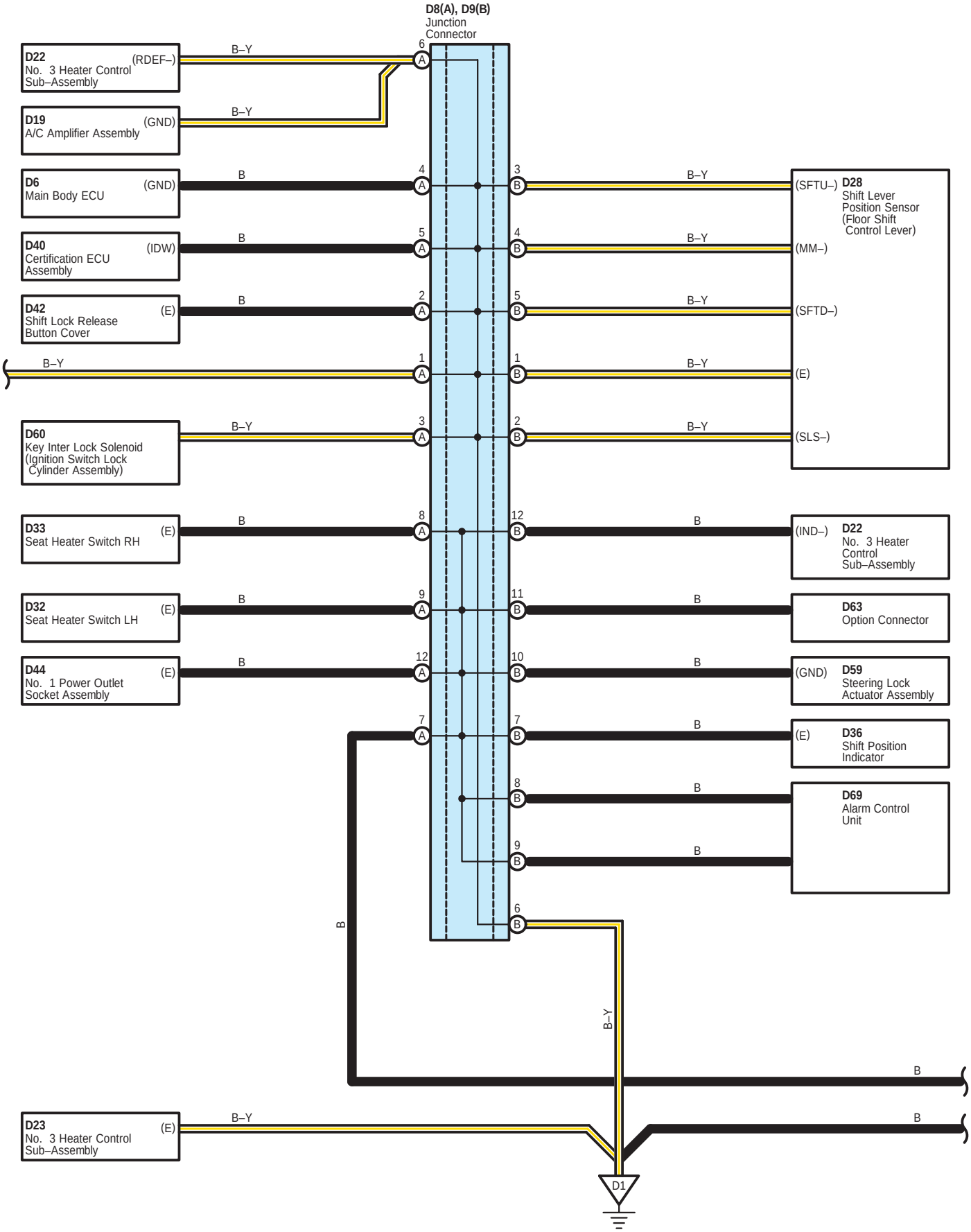
D8(A), D9(B)
Junction Connector
D22 (RDEF–)
No. 3 Heater Control Sub–Assembly
D19 (GND)
A/C Amplifier Assembly
D6 (GND)
Main Body ECU
D40 (IDW)
Certification ECU Assembly
D42 (E)
Shift Lock Release Button Cover
D60
Key Inter Lock Solenoid (Ignition Switch Lock Cylinder Assembly)
D33 (E)
Seat Heater Switch RH
D32 (E)
Seat Heater Switch LH
D44 (E)
No. 1 Power Outlet Socket Assembly
D23 (E)
No. 3 Heater Control Sub–Assembly
D28
Shift Lever Position Sensor (Floor Shift Control Lever)
(SFTU–)
(MM–)
(SFTD–)
(E)
(SLS–)
D22
No. 3 Heater Control Sub–Assembly
(IND–)
D63
Option Connector
D59
Steering Lock Actuator Assembly
(GND)
D36
Shift Position Indicator
(E)
D69
Alarm Control Unit
D1
B–Y
B

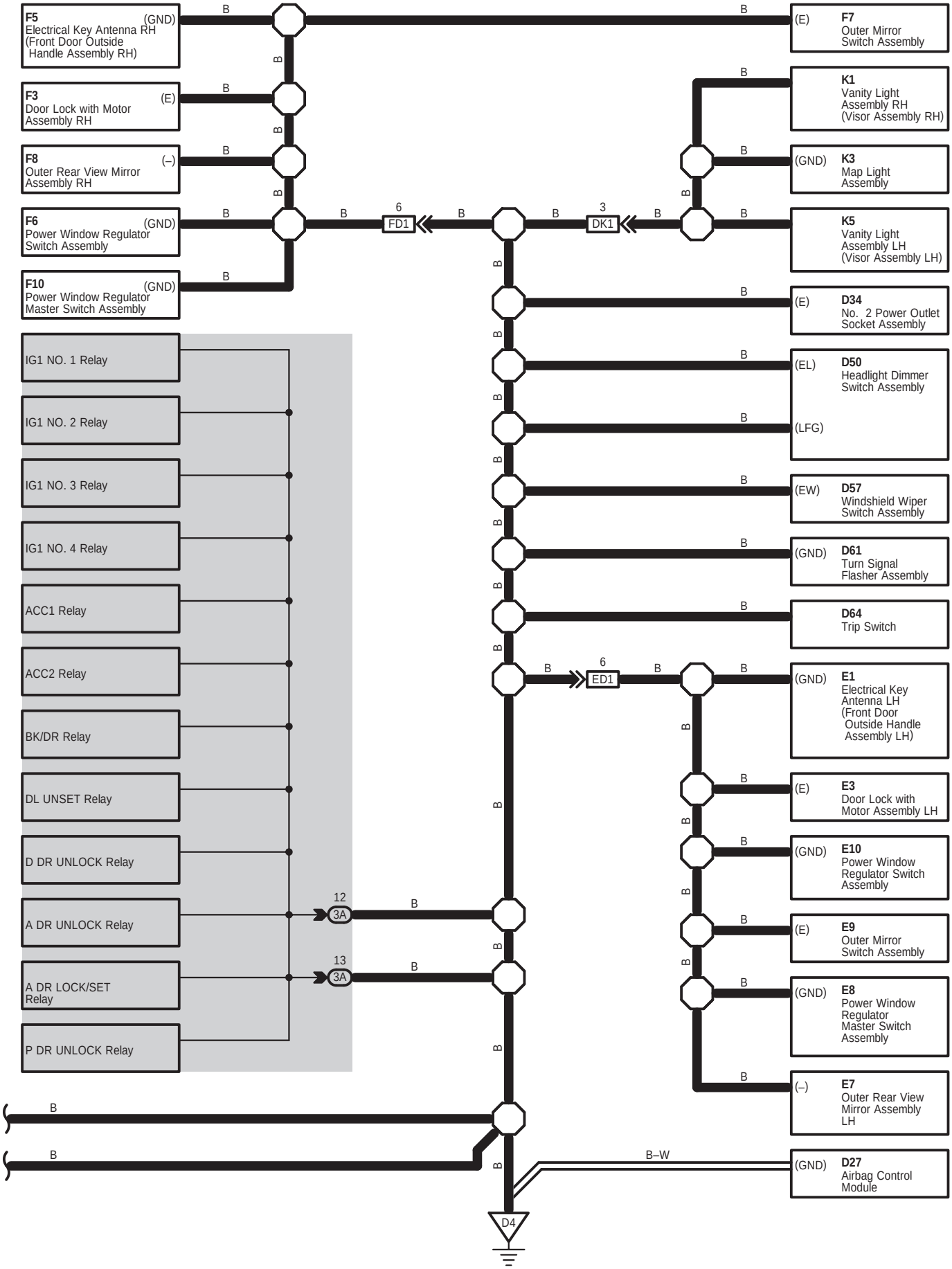
F5 (GND)
Electrical Key Antenna RH (Front Door Outside Handle Assembly RH)
F3 (E)
Door Lock with Motor Assembly RH
F8 (–)
Outer Rear View Mirror Assembly RH
F6 (GND)
Power Window Regulator Switch Assembly
F10 (GND)
Power Window Regulator Master Switch Assembly
FD1
DK1
ED1
IG1 NO. 1 Relay
IG1 NO. 2 Relay
IG1 NO. 3 Relay
IG1 NO. 4 Relay
ACC1 Relay
ACC2 Relay
BK/DR Relay
DL UNSET Relay
D DR UNLOCK Relay
A DR UNLOCK Relay
A DR LOCK/SET Relay
P DR UNLOCK Relay
3A
(E) F7 Outer Mirror Switch Assembly
K1 Vanity Light Assembly RH (Visor Assembly RH)
(GND) K3 Map Light Assembly
K5 Vanity Light Assembly LH (Visor Assembly LH)
(E) D34 No. 2 Power Outlet Socket Assembly
(EL) D50 Headlight Dimmer Switch Assembly
(LFG)
(EW) D57 Windshield Wiper Switch Assembly
(GND) D61 Turn Signal Flasher Assembly
D64 Trip Switch
(GND) E1 Electrical Key Antenna LH (Front Door Outside Handle Assembly LH)
(E) E3 Door Lock with Motor Assembly LH
(GND) E10 Power Window Regulator Switch Assembly
(E) E9 Outer Mirror Switch Assembly
(GND) E8 Power Window Regulator Master Switch Assembly
(–) E7 Outer Rear View Mirror Assembly LH
(GND) D27 Airbag Control Module
B–W
D4

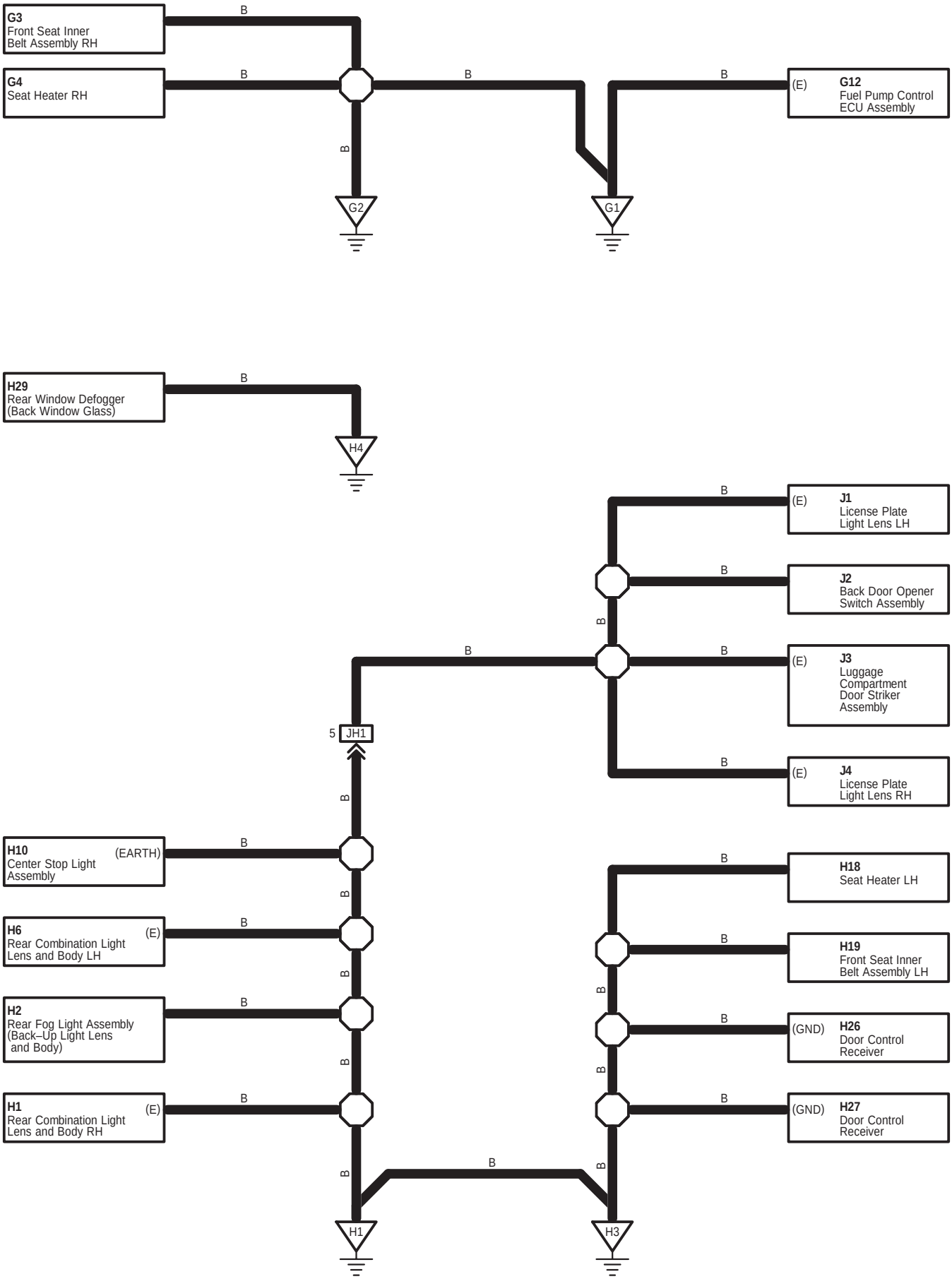
G3
Front Seat Inner
Belt Assembly RH
G4
Seat Heater RH
(E)
G12
Fuel Pump Control
ECU Assembly
G2
G1
H29
Rear Window Defogger
(Back Window Glass)
H4
(E)
J1
License Plate
Light Lens LH
J2
Back Door Opener
Switch Assembly
(E)
J3
Luggage
Compartment
Door Striker
Assembly
(E)
J4
License Plate
Light Lens RH
5
JH1
H10
(EARTH)
Center Stop Light
Assembly
H6
(E)
Rear Combination Light
Lens and Body LH
H2
Rear Fog Light Assembly
(Back–Up Light Lens
and Body)
H1
(E)
Rear Combination Light
Lens and Body RH
H18
Seat Heater LH
H19
Front Seat Inner
Belt Assembly LH
(GND)
H26
Door Control
Receiver
(GND)
H27
Door Control
Receiver
H1
H3

○ : Parts Location

Code		See Page	Code		See Page	Code		See Page
A9	A	42 (LHD)	D8	A	40 (LHD)	D16	A	40 (LHD)
		50 (RHD)			48 (RHD)			48 (RHD)
A10	B	42 (LHD)	D9	B	40 (LHD)	D17	B	40 (LHD)
		50 (RHD)			48 (RHD)			48 (RHD)

⬭ : Relay Blocks

Code	See Page	Relay Blocks (Relay Block Location)
1	24	Engine Room R/B (Engine Compartment Right)
2	25	R/B No. 2 (Behind Glove Box)

⬭ : Junction Block and Wire Harness Connector

Code	See Page	Junction Block and Wire Harness (Connector Location)
3A	26	Instrument Panel Wire and Instrument Panel J/B Assembly (Instrument Panel Reinforcement)
3B		

▭ : Connector Joining Wire Harness and Wire Harness

Code	See Page	Joining Wire Harness and Wire Harness (Connector Location)
AC1	54 (LHD)	Engine Room Main Wire and Engine Wire (Engine Unit)
	58 (RHD)	
AD2	55 (LHD)	Engine Room Main Wire and Instrument Panel Wire (Instrument Panel Reinforcement)
	59 (RHD)	
AL2	54 (LHD)	Engine Room Main Wire and Transmission Wire (Dash Panel)
	58 (RHD)	
DK1	55 (LHD)	Instrument Panel Wire and Roof Wire (Front Body Inner Pillar RH)
	59 (RHD)	
ED1	55 (LHD)	Front Door Wire LH and Instrument Panel Wire (Cowl Side Panel LH)
	59 (RHD)	
FD1	55 (LHD)	Front Door Wire RH and Instrument Panel Wire (Cowl Side Panel RH)
	59 (RHD)	
JH1	56 (LHD)	Luggage Room Wire and No. 2 Floor Wire (Quarter Panel LH)
	60 (RHD)	

▽ : Ground Points

Code	See Page	Ground Points Location
A1	54 (LHD)	Front Fender Apron LH
	58 (RHD)	
A2	55 (LHD)	Cowl Side Panel LH
	59 (RHD)	Cowl Side Panel RH
A3	55 (LHD)	
	59 (RHD)	Cowl Side Panel LH
A7	54 (LHD)	Front Fender Apron RH
	58 (RHD)	
C1	54 (LHD)	Engine Unit
	58 (RHD)	
D1	55 (LHD)	Cowl Side Panel LH
	59 (RHD)	Cowl Side Panel RH
D2	55 (LHD)	Instrument Panel Brace LH
	59 (RHD)	Instrument Panel Brace RH
D3	55 (LHD)	
	59 (RHD)	Instrument Panel Brace LH
D4	55 (LHD)	Cowl Side Panel RH
	59 (RHD)	Cowl Side Panel LH
G1	56 (LHD)	Quarter Wheel House Panel RH
	60 (RHD)	
G2	56 (LHD)	
	60 (RHD)	

I GROUND POINT

▽ : **Ground Points**

Code	See Page	Ground Points Location
H1	56 (LHD)	Lower Back Panel
	60 (RHD)	
H3	56 (LHD)	Quarter Wheel House Panel LH
	60 (RHD)	
H4	56 (LHD)	Upper Back Panel
	60 (RHD)	

J POWER SOURCE (Current Flow Chart)

The chart below shows the route by which current flows from the battery to each electrical source (Fusible Link, Circuit Breaker, Fuse, etc.) and other Parts.

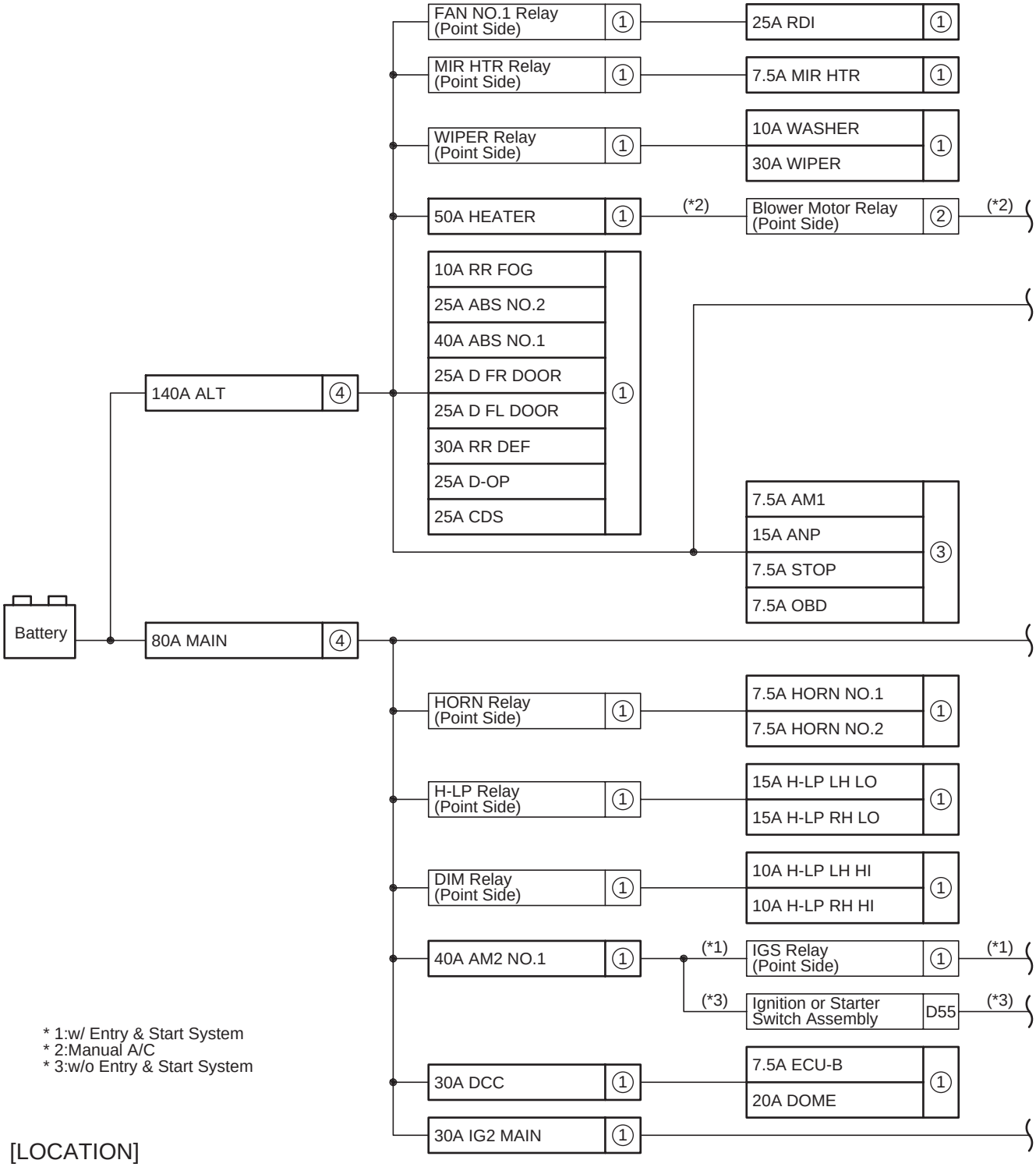

* 1:w/ Entry & Start System
* 2:Manual A/C
* 3:w/o Entry & Start System

[LOCATION]

① : Engine Room R/B and Engine Room J/B (See Page 24)

② : R/B No. 2 (See Page 25)

③ : Instrument Panel J/B Assembly (See Page 26)

④ : Fusible Link Block Assembly (See Page 36)

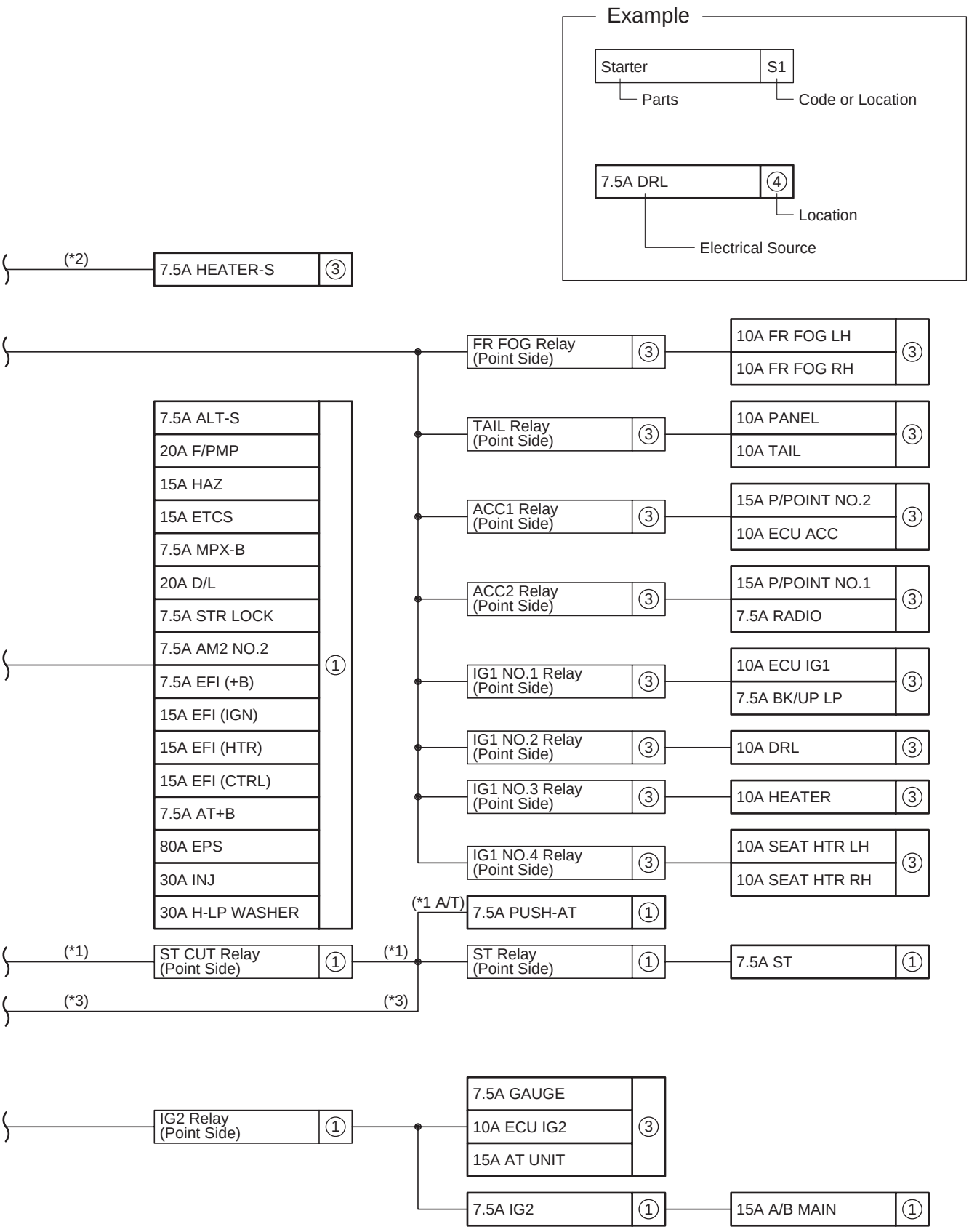
Example
Starter
S1
Parts
Code or Location
7.5A DRL
4
Location
Electrical Source
(*2)
7.5A HEATER-S
3
FR FOG Relay (Point Side)
3
10A FR FOG LH
10A FR FOG RH
3
7.5A ALT-S
20A F/PMP
15A HAZ
15A ETCS
7.5A MPX-B
20A D/L
7.5A STR LOCK
7.5A AM2 NO.2
7.5A EFI (+B)
15A EFI (IGN)
15A EFI (HTR)
15A EFI (CTRL)
7.5A AT+B
80A EPS
30A INJ
30A H-LP WASHER
1
TAIL Relay (Point Side)
3
10A PANEL
10A TAIL
3
ACC1 Relay (Point Side)
3
15A P/POINT NO.2
10A ECU ACC
3
ACC2 Relay (Point Side)
3
15A P/POINT NO.1
7.5A RADIO
3
IG1 NO.1 Relay (Point Side)
3
10A ECU IG1
7.5A BK/UP LP
3
IG1 NO.2 Relay (Point Side)
3
10A DRL
3
IG1 NO.3 Relay (Point Side)
3
10A HEATER
3
IG1 NO.4 Relay (Point Side)
3
10A SEAT HTR LH
10A SEAT HTR RH
3
(*1 A/T)
7.5A PUSH-AT
1
(*1)
ST CUT Relay (Point Side)
1
(*1)
ST Relay (Point Side)
1
7.5A ST
1
(*3)
(*3)
IG2 Relay (Point Side)
1
7.5A GAUGE
10A ECU IG2
15A AT UNIT
3
7.5A IG2
1
15A A/B MAIN
1

Engine Room R/B and Engine Room J/B (See Page 24)

Fuse		System	Page
7.5A	ALT-S	Charging	106
7.5A	AM2 NO.2	Cruise Control, ECT and A/T Indicator (A/T), Engine Control, Shift Indicator (M/T) and Shift Lock	114
		Engine Immobiliser System (w/ Entry & Start System), Entry & Start System, Starting (w/ Entry & Start System), Steering Lock (w/ Entry & Start System) and Wireless Door Lock Control (w/ Entry & Start System)	72
7.5A	AT+B	Cruise Control, ECT and A/T Indicator (A/T), Engine Control, Shift Indicator (M/T) and Shift Lock	114
7.5A	ECU-B	ABS, TRC and VSC	250
		Air Conditioner (LHD Automatic A/C)	380
		Air Conditioner (Manual A/C)	404
		Air Conditioner (RHD Automatic A/C)	392
		Alarm Control System	420
		Automatic Light Control and Light Auto Turn Off System	224
		Combination Meter	362
		Cruise Control, ECT and A/T Indicator (A/T), Engine Control, Shift Indicator (M/T) and Shift Lock	114
		Door Lock Control	300
		Double Locking	324
		Engine Immobiliser System (w/ Entry & Start System), Entry & Start System, Starting (w/ Entry & Start System), Steering Lock (w/ Entry & Start System) and Wireless Door Lock Control (w/ Entry & Start System)	72
		Engine Immobiliser System (w/o Entry & Start System)	152
		Front Fog Light	210
		Headlight	166
		Headlight Beam Level Control	230
		Headlight Cleaner	238
		Illumination and Taillight	188
		Interior Light	200
		Key Reminder (w/o Entry & Start System) and Light Reminder	244
		Luggage Compartment Door Opener	314
		Mirror Heater and Rear Window Defogger	344
		Power Window (LHD)	288
		Power Window (RHD)	294
		Rear Fog Light	218
		Wireless Door Lock Control (w/o Entry & Start System)	306
7.5A	EFI(+B)	Cruise Control, ECT and A/T Indicator (A/T), Engine Control, Shift Indicator (M/T) and Shift Lock	114
7.5A	HORN NO.1	Horn	352
7.5A	HORN NO.2	Horn	352

* These are the page numbers of the first page on which the related system is shown.

Fuse		System	Page
7.5A	IG2	Cruise Control, ECT and A/T Indicator (A/T), Engine Control, Shift Indicator (M/T) and Shift Lock	114
		Engine Immobiliser System (w/ Entry & Start System), Entry & Start System, Starting (w/ Entry & Start System), Steering Lock (w/ Entry & Start System) and Wireless Door Lock Control (w/ Entry & Start System)	72
7.5A	MIR HTR	Mirror Heater and Rear Window Defogger	344
7.5A	MPX-B	ABS, TRC and VSC	250
		Air Conditioner (LHD Automatic A/C)	380
		Air Conditioner (Manual A/C)	404
		Air Conditioner (RHD Automatic A/C)	392
		Alarm Control System	420
		Automatic Light Control and Light Auto Turn Off System	224
		Combination Meter	362
		Cruise Control, ECT and A/T Indicator (A/T), Engine Control, Shift Indicator (M/T) and Shift Lock	114
		Door Lock Control	300
		Double Locking	324
		Engine Immobiliser System (w/ Entry & Start System), Entry & Start System, Starting (w/ Entry & Start System), Steering Lock (w/ Entry & Start System) and Wireless Door Lock Control (w/ Entry & Start System)	72
		Engine Immobiliser System (w/o Entry & Start System)	152
		EPS	274
		Front Fog Light	210
		Headlight	166
		Headlight Beam Level Control	230
		Headlight Cleaner	238
		Illumination and Taillight	188
		Interior Light	200
		Key Reminder (w/o Entry & Start System) and Light Reminder	244
		Luggage Compartment Door Opener	314
		Mirror Heater and Rear Window Defogger	344
		Power Window (LHD)	288
		Power Window (RHD)	294
		Rear Fog Light	218
		Seat Belt Warning	282
		SRS	265
		Wireless Door Lock Control (w/o Entry & Start System)	306
7.5A	PUSH-AT	Cruise Control, ECT and A/T Indicator (A/T), Engine Control, Shift Indicator (M/T) and Shift Lock	114

* These are the page numbers of the first page on which the related system is shown.

J POWER SOURCE (Current Flow Chart)

Fuse		System	Page
7.5A	PUSH-AT	Engine Immobiliser System (w/ Entry & Start System), Entry & Start System, Starting (w/ Entry & Start System), Steering Lock (w/ Entry & Start System) and Wireless Door Lock Control (w/ Entry & Start System)	72
7.5A	ST	Cruise Control, ECT and A/T Indicator (A/T), Engine Control, Shift Indicator (M/T) and Shift Lock	114
		Engine Immobiliser System (w/ Entry & Start System), Entry & Start System, Starting (w/ Entry & Start System), Steering Lock (w/ Entry & Start System) and Wireless Door Lock Control (w/ Entry & Start System)	72
		Starting (w/o Entry & Start System)	102
7.5A	STR LOCK	Engine Immobiliser System (w/ Entry & Start System), Entry & Start System, Starting (w/ Entry & Start System), Steering Lock (w/ Entry & Start System) and Wireless Door Lock Control (w/ Entry & Start System)	72
10A	H-LP LH HI	Headlight	166
10A	H-LP RH HI	Headlight	166
10A	RR FOG	Rear Fog Light	218
10A	WASHER	Front Wiper and Washer	332
		Headlight Cleaner	238
15A	A/B MAIN	SRS	265
15A	EFI(CTRL)	Cruise Control, ECT and A/T Indicator (A/T), Engine Control, Shift Indicator (M/T) and Shift Lock	114
15A	EFI(HTR)	Cruise Control, ECT and A/T Indicator (A/T), Engine Control, Shift Indicator (M/T) and Shift Lock	114
15A	EFI(IGN)	Ignition	110
15A	ETCS	Cruise Control, ECT and A/T Indicator (A/T), Engine Control, Shift Indicator (M/T) and Shift Lock	114
15A	HAZ	ABS, TRC and VSC	250
		Air Conditioner (LHD Automatic A/C)	380
		Air Conditioner (Manual A/C)	404
		Air Conditioner (RHD Automatic A/C)	392
		Alarm Control System	420
		Automatic Light Control and Light Auto Turn Off System	224
		Combination Meter	362
		Cruise Control, ECT and A/T Indicator (A/T), Engine Control, Shift Indicator (M/T) and Shift Lock	114
		Door Lock Control	300
		Double Locking	324
		Engine Immobiliser System (w/ Entry & Start System), Entry & Start System, Starting (w/ Entry & Start System), Steering Lock (w/ Entry & Start System) and Wireless Door Lock Control (w/ Entry & Start System)	72
		Engine Immobiliser System (w/o Entry & Start System)	152
		Front Fog Light	210

* These are the page numbers of the first page on which the related system is shown.

Fuse		System	Page
15A	HAZ	Headlight	166
		Headlight Beam Level Control	230
		Headlight Cleaner	238
		Illumination and Taillight	188
		Interior Light	200
		Key Reminder (w/o Entry & Start System) and Light Reminder	244
		Luggage Compartment Door Opener	314
		Mirror Heater and Rear Window Defogger	344
		Power Window (LHD)	288
		Power Window (RHD)	294
		Rear Fog Light	218
		Turn Signal and Hazard Warning Light	182
		Wireless Door Lock Control (w/o Entry & Start System)	306
15A	H-LP LH LO	Headlight	166
15A	H-LP RH LO	Headlight	166
20A	D/L	Door Lock Control	300
		Double Locking	324
		Engine Immobiliser System (w/ Entry & Start System), Entry & Start System, Starting (w/ Entry & Start System), Steering Lock (w/ Entry & Start System) and Wireless Door Lock Control (w/ Entry & Start System)	72
		Luggage Compartment Door Opener	314
		Wireless Door Lock Control (w/o Entry & Start System)	306
20A	DOME	Audio System	356
		Clock	286
		Engine Immobiliser System (w/ Entry & Start System), Entry & Start System, Starting (w/ Entry & Start System), Steering Lock (w/ Entry & Start System) and Wireless Door Lock Control (w/ Entry & Start System)	72
		Interior Light	200
		Option Connector	416
		Seat Belt Warning	282
		SRS	265
		Wireless Door Lock Control (w/o Entry & Start System)	306
20A	F/PMP	Cruise Control, ECT and A/T Indicator (A/T), Engine Control, Shift Indicator (M/T) and Shift Lock	114
25A	ABS NO.2	ABS, TRC and VSC	250
25A	CDS	Cooling Fan	376
25A	D FL DOOR	Power Window (LHD)	288
		Power Window (RHD)	294
25A	D FR DOOR	Power Window (LHD)	288
		Power Window (RHD)	294

* These are the page numbers of the first page on which the related system is shown.

Fuse		System	Page
25A	D-OP	Option Connector	416
25A	RDI	Cooling Fan	376
30A	H-LP WASHER	Headlight Cleaner	238
30A	IG2 MAIN	Cruise Control, ECT and A/T Indicator (A/T), Engine Control, Shift Indicator (M/T) and Shift Lock	114
		Engine Immobiliser System (w/ Entry & Start System), Entry & Start System, Starting (w/ Entry & Start System), Steering Lock (w/ Entry & Start System) and Wireless Door Lock Control (w/ Entry & Start System)	72
30A	INJ	Cruise Control, ECT and A/T Indicator (A/T), Engine Control, Shift Indicator (M/T) and Shift Lock	114
30A	RR DEF	Mirror Heater and Rear Window Defogger	344
30A	WIPER	Front Wiper and Washer	332
40A	ABS NO.1	ABS, TRC and VSC	250
40A	AM2 NO.1	Cruise Control, ECT and A/T Indicator (A/T), Engine Control, Shift Indicator (M/T) and Shift Lock	114
		Engine Immobiliser System (w/ Entry & Start System), Entry & Start System, Starting (w/ Entry & Start System), Steering Lock (w/ Entry & Start System) and Wireless Door Lock Control (w/ Entry & Start System)	72
		Starting (w/o Entry & Start System)	102
50A	HEATER	Air Conditioner (LHD Automatic A/C)	380
		Air Conditioner (Manual A/C)	404
		Air Conditioner (RHD Automatic A/C)	392
80A	EPS	EPS	274

Instrument Panel J/B Assembly (See Page 26)

Fuse		System	Page
7.5A	AM1	Cruise Control, ECT and A/T Indicator (A/T), Engine Control, Shift Indicator (M/T) and Shift Lock	114
		Starting (w/o Entry & Start System)	102
7.5A	BK/UP LP	ABS, TRC and VSC	250
		Back-Up Light	180
		Cruise Control, ECT and A/T Indicator (A/T), Engine Control, Shift Indicator (M/T) and Shift Lock	114
		Luggage Compartment Door Opener	314
		Option Connector	416
7.5A	GAUGE	ABS, TRC and VSC	250
		Air Conditioner (LHD Automatic A/C)	380
		Air Conditioner (RHD Automatic A/C)	392
		Charging	106
		Clock	286
		Combination Meter	362
		Cruise Control, ECT and A/T Indicator (A/T), Engine Control, Shift Indicator (M/T) and Shift Lock	114

* These are the page numbers of the first page on which the related system is shown.

Fuse		System	Page
7.5A	GAUGE	Engine Immobiliser System (w/ Entry & Start System), Entry & Start System, Starting (w/ Entry & Start System), Steering Lock (w/ Entry & Start System) and Wireless Door Lock Control (w/ Entry & Start System)	72
		Engine Immobiliser System (w/o Entry & Start System)	152
		EPS	274
		Front Fog Light	210
		Headlight	166
		Headlight Beam Level Control	230
		Illumination and Taillight	188
		Key Reminder (w/o Entry & Start System) and Light Reminder	244
		Option Connector	416
		Rear Fog Light	218
		Seat Belt Warning	282
		SRS	265
		Turn Signal and Hazard Warning Light	182
7.5A	HEATER-S	Air Conditioner (Manual A/C)	404
7.5A	OBD	DLC3	158
7.5A	RADIO	Air Conditioner (LHD Automatic A/C)	380
		Air Conditioner (RHD Automatic A/C)	392
		Audio System	356
		Clock	286
		Option Connector	416
		Seat Belt Warning	282
		SRS	265
7.5A	STOP	ABS, TRC and VSC	250
		Cruise Control, ECT and A/T Indicator (A/T), Engine Control, Shift Indicator (M/T) and Shift Lock	114
		Engine Immobiliser System (w/ Entry & Start System), Entry & Start System, Starting (w/ Entry & Start System), Steering Lock (w/ Entry & Start System) and Wireless Door Lock Control (w/ Entry & Start System)	72
		Stop Light	176
10A	DRL	Headlight	166
10A	ECU ACC	ABS, TRC and VSC	250
		Air Conditioner (LHD Automatic A/C)	380
		Air Conditioner (Manual A/C)	404
		Air Conditioner (RHD Automatic A/C)	392
		Alarm Control System	420
		Automatic Light Control and Light Auto Turn Off System	224
		Combination Meter	362

* These are the page numbers of the first page on which the related system is shown.

Fuse		System	Page
10A	ECU ACC	Cruise Control, ECT and A/T Indicator (A/T), Engine Control, Shift Indicator (M/T) and Shift Lock	114
		Door Lock Control	300
		Double Locking	324
		Engine Immobiliser System (w/ Entry & Start System), Entry & Start System, Starting (w/ Entry & Start System), Steering Lock (w/ Entry & Start System) and Wireless Door Lock Control (w/ Entry & Start System)	72
		Engine Immobiliser System (w/o Entry & Start System)	152
		Front Fog Light	210
		Headlight	166
		Headlight Beam Level Control	230
		Headlight Cleaner	238
		Illumination and Taillight	188
		Interior Light	200
		Key Reminder (w/o Entry & Start System) and Light Reminder	244
		Luggage Compartment Door Opener	314
		Mirror Heater and Rear Window Defogger	344
		Option Connector	416
		Power Window (LHD)	288
		Power Window (RHD)	294
		Rear Fog Light	218
		Remote Control Mirror (LHD)	336
		Remote Control Mirror (RHD)	340
		Wireless Door Lock Control (w/o Entry & Start System)	306
10A	ECU IG1	ABS, TRC and VSC	250
		Air Conditioner (LHD Automatic A/C)	380
		Air Conditioner (Manual A/C)	404
		Air Conditioner (RHD Automatic A/C)	392
		Alarm Control System	420
		Automatic Light Control and Light Auto Turn Off System	224
		Combination Meter	362
		Cooling Fan	376
		Cruise Control, ECT and A/T Indicator (A/T), Engine Control, Shift Indicator (M/T) and Shift Lock	114
		Door Lock Control	300
		Double Locking	324
		Engine Immobiliser System (w/ Entry & Start System), Entry & Start System, Starting (w/ Entry & Start System), Steering Lock (w/ Entry & Start System) and Wireless Door Lock Control (w/ Entry & Start System)	72
		Engine Immobiliser System (w/o Entry & Start System)	152
		EPS	274

* These are the page numbers of the first page on which the related system is shown.

Fuse		System	Page
10A	ECU IG1	Front Fog Light	210
		Headlight	166
		Headlight Beam Level Control	230
		Headlight Cleaner	238
		Illumination and Taillight	188
		Interior Light	200
		Key Reminder (w/o Entry & Start System) and Light Reminder	244
		Luggage Compartment Door Opener	314
		Mirror Heater and Rear Window Defogger	344
		Power Window (LHD)	288
		Power Window (RHD)	294
		Rear Fog Light	218
		Wireless Door Lock Control (w/o Entry & Start System)	306
10A	ECU IG2	Cruise Control, ECT and A/T Indicator (A/T), Engine Control, Shift Indicator (M/T) and Shift Lock	114
		DLC3	158
		Option Connector	416
10A	FR FOG LH	Front Fog Light	210
10A	FR FOG RH	Front Fog Light	210
10A	HEATER	Air Conditioner (LHD Automatic A/C)	380
		Air Conditioner (Manual A/C)	404
		Air Conditioner (RHD Automatic A/C)	392
		Cooling Fan	376
		Engine Immobiliser System (w/ Entry & Start System), Entry & Start System, Starting (w/ Entry & Start System), Steering Lock (w/ Entry & Start System) and Wireless Door Lock Control (w/ Entry & Start System)	72
10A	PANEL	Illumination and Taillight	188
10A	SEAT HTR LH	Seat Heater	350
10A	SEAT HTR RH	Seat Heater	350
10A	TAIL	Front Fog Light	210
		Illumination and Taillight	188
		Rear Fog Light	218
15A	AT UNIT	Cruise Control, ECT and A/T Indicator (A/T), Engine Control, Shift Indicator (M/T) and Shift Lock	114
15A	P/POINT NO.1	Power Outlet	354
15A	P/POINT NO.2	Power Outlet	354

Fusible Link Block Assembly (See Page 36)

Fuse		System	Page
80A	MAIN	Automatic Light Control and Light Auto Turn Off System	224
		Charging	106

* These are the page numbers of the first page on which the related system is shown.

J POWER SOURCE (Current Flow Chart)

Fuse		System	Page
80A	MAIN	Headlight	166
		Horn	352
140A	ALT	Charging	106
		Cooling Fan	376
		Front Fog Light	210
		Illumination and Taillight	188
		Mirror Heater and Rear Window Defogger	344
		Rear Fog Light	218

* These are the page numbers of the first page on which the related system is shown.

K CONNECTOR LIST

A1
Gray

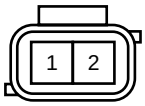

A2
Black

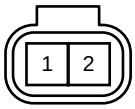

A3

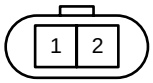

A4

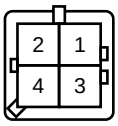

A5

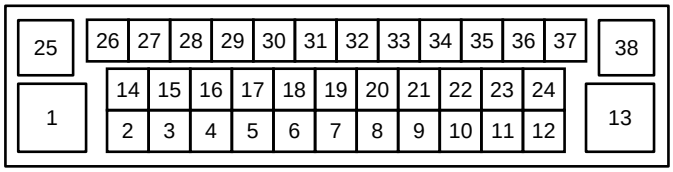

A6
Gray

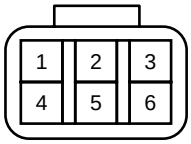

A7
Gray

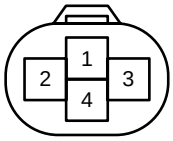

A9
Gray

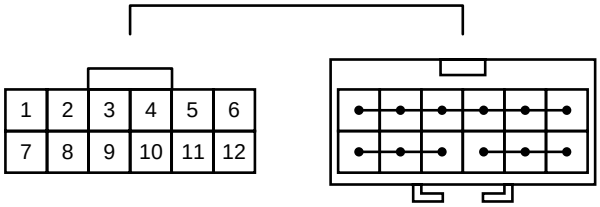

A10
Gray

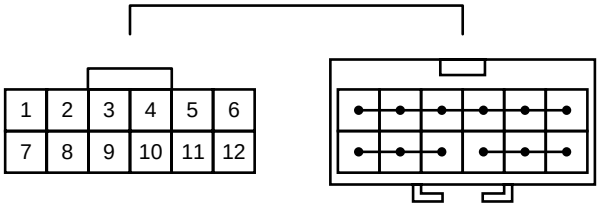

A11

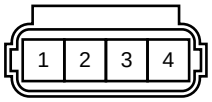

A12

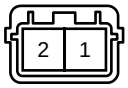

A13

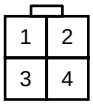

A14

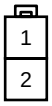

A15

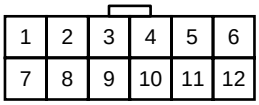

A16

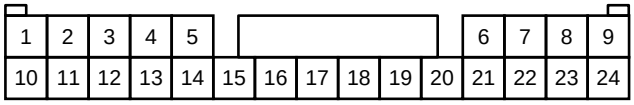

A17

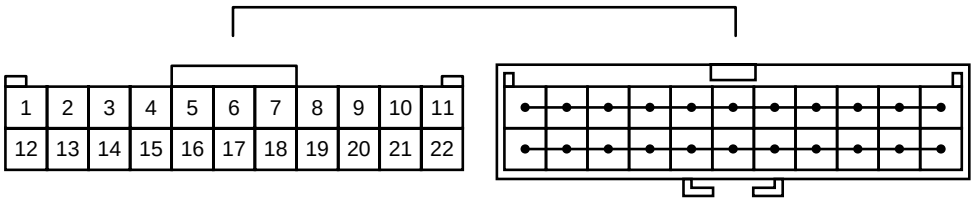

A18

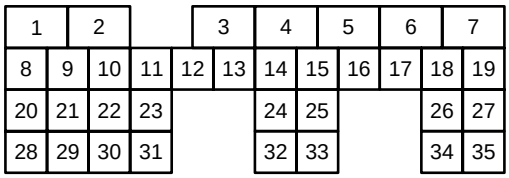

A19

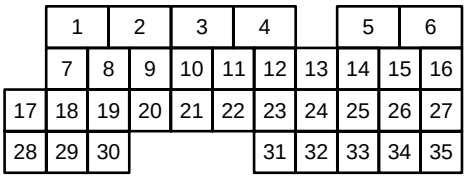

A20

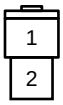

A21

A22

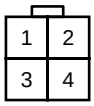

A23
Black

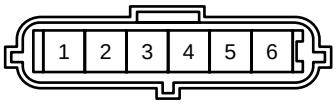

A24
Green

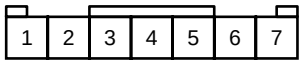

A25

A26

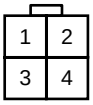

A27

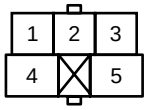

A28
Green

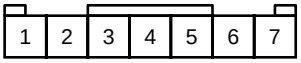

A29

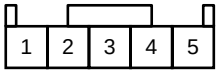

A30

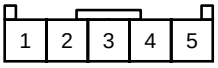

A31
Green

A32
Green

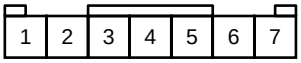

A33

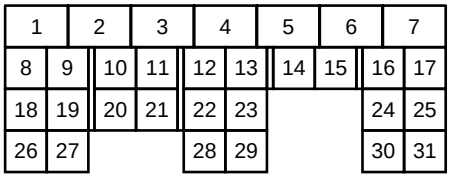

A34

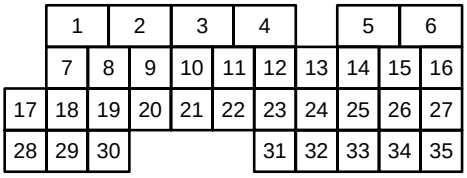

A35

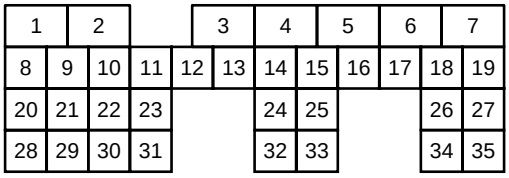

A36

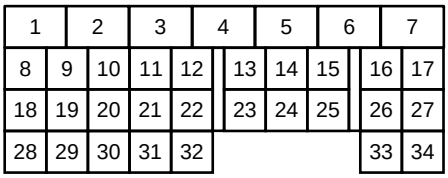

A37

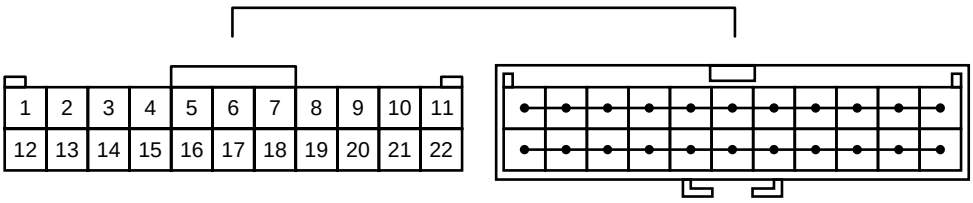

A38

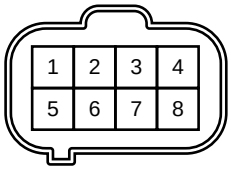

A40
Gray

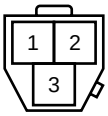

A41

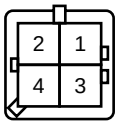

A42

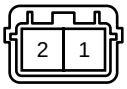

A43

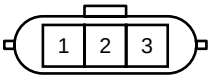

A44

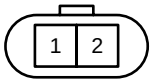

K CONNECTOR LIST

A45

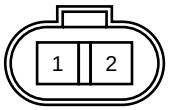

A46
Black

A48

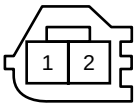

A49

A51

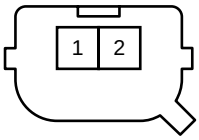

A52

A53

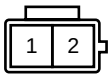

A54

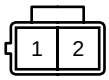

A55
Gray

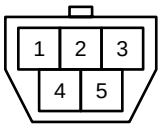

A58

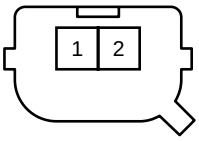

A59

A60

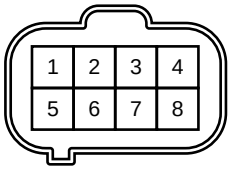

A62
Gray

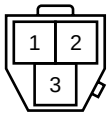

A63
Black

A64

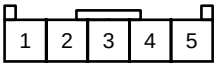

A66

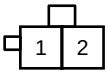

A67

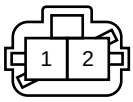

A71

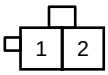

A72

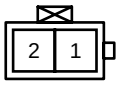

A73

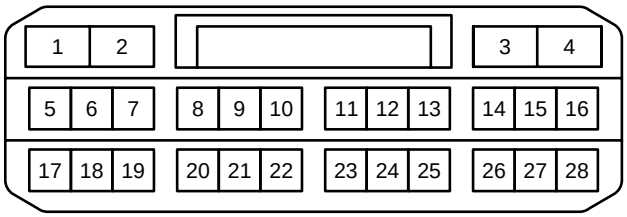

A75

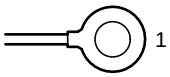

A76

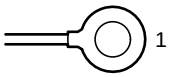

A77

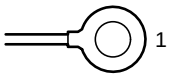

B1

B2

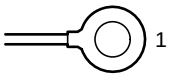

C1
Black

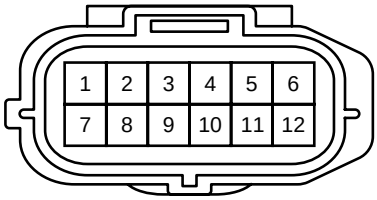

C2
Gray

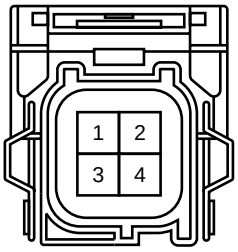

C3
Black

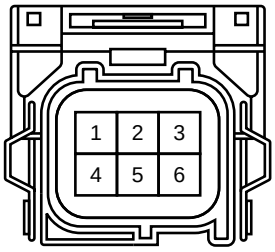

C4
Gray

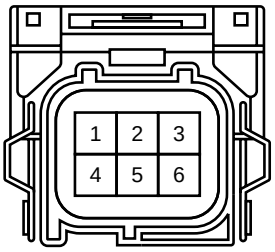

C5
Black

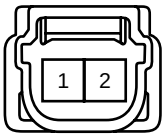

C6
Gray

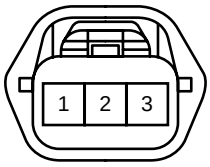

C7
Black

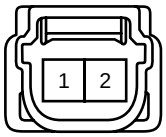

C8
Dark Gray

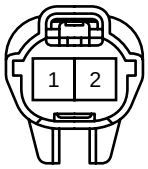

C9
Dark Gray

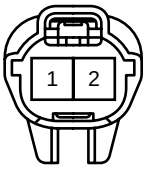

C10
Black

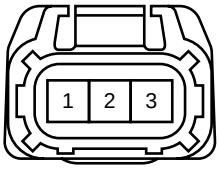

C11
Gray

C12
Gray

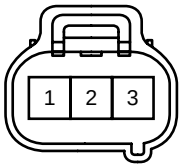

C13
Black

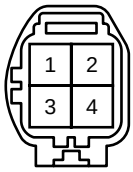

C14
Gray

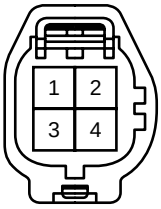

C15
Black

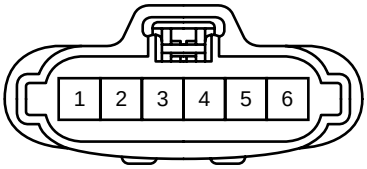

C16
Black

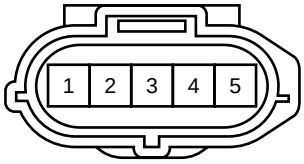

C17
Gray

C18
Black

C19
Dark Gray

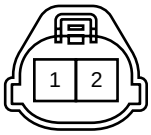

C20
Dark Gray

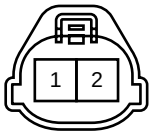

C21
Black

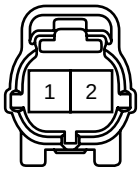

C22

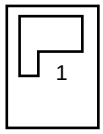

C23
Black

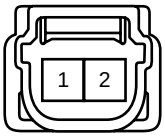

C24
Black

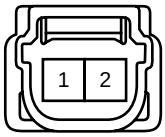

C25
Gray

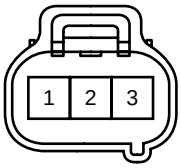

C26
Gray

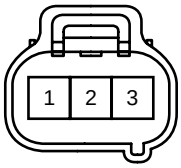

C27
Black

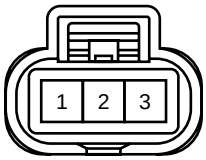

C28
Black

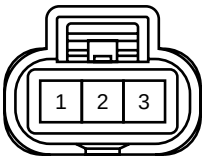

C29
Black

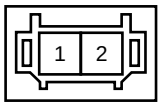

C30
Dark Gray

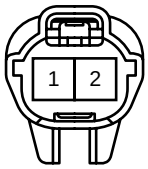

C31
Dark Gray

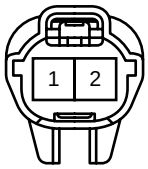

C33
Gray

K CONNECTOR LIST

C34
Black

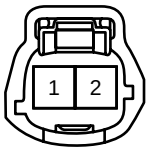

C35
Black

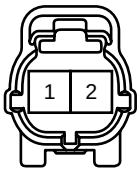

C36
Black

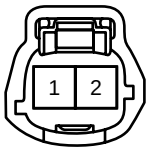

C37
Gray

C38
Black

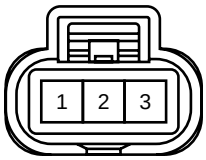

C39
Black

D2

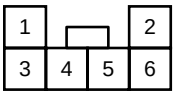

D4

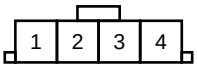

D5

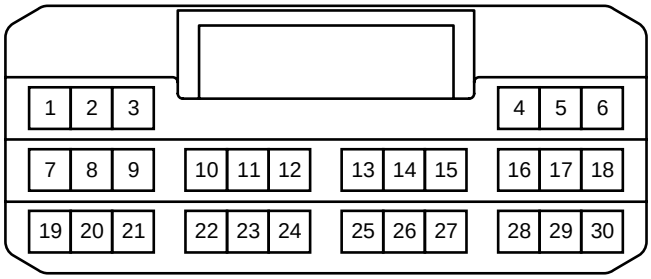

D6

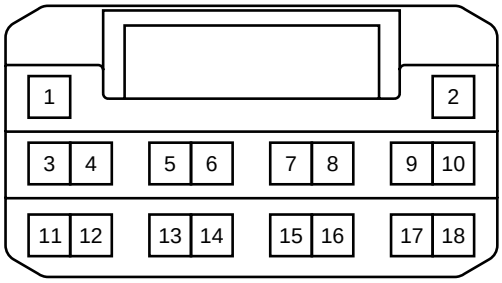

D7

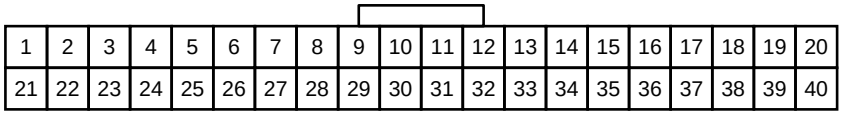

D8
Blue

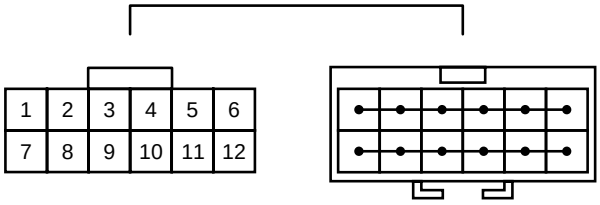

D9
Blue

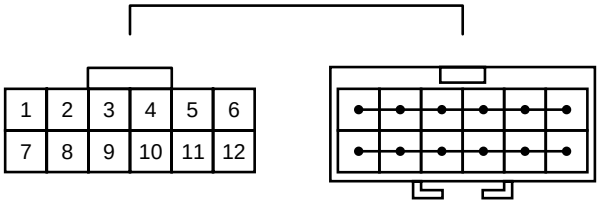

D10

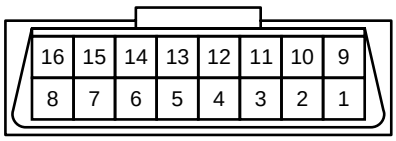

D12

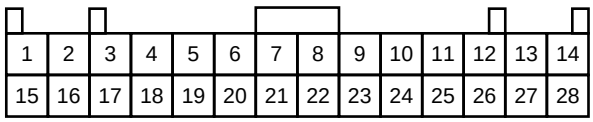

D13

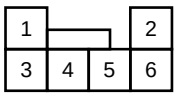

D14

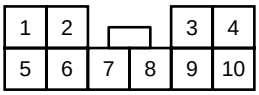

D16
Black

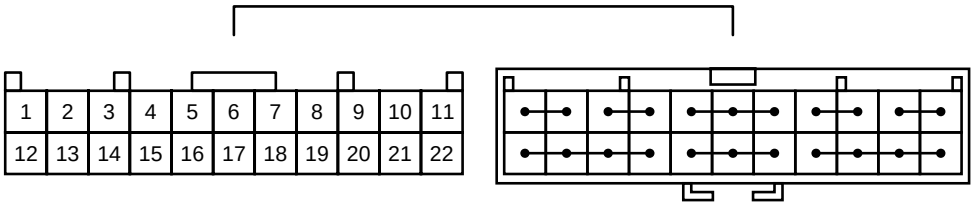

D17
Black

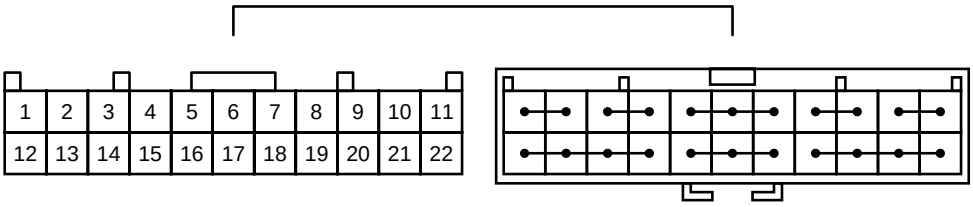

D18

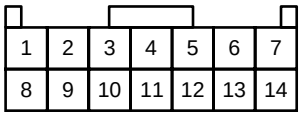

D19

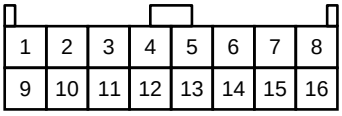

D20

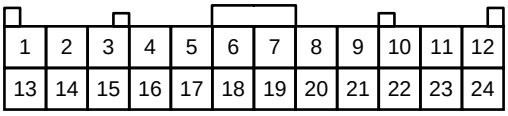

D21

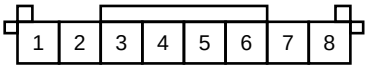

D22

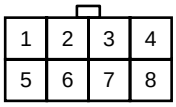

D23

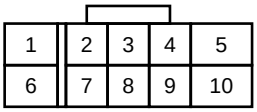

D24

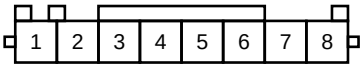

D25

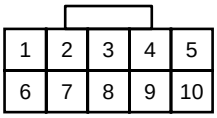

D26

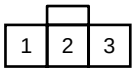

D27

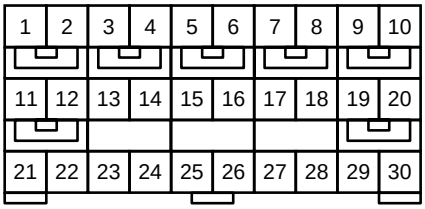

D28

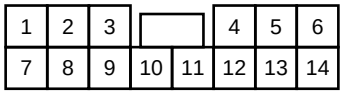

D29

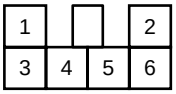

D30

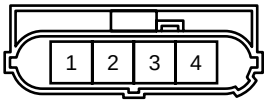

D31

D32

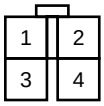

D33

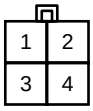

D34

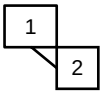

D35

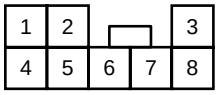

K CONNECTOR LIST

D36

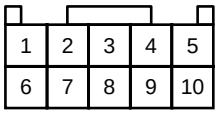

D37

D39

D40

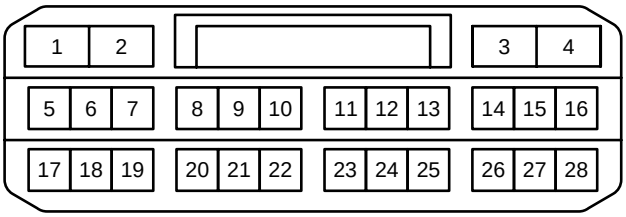

D41

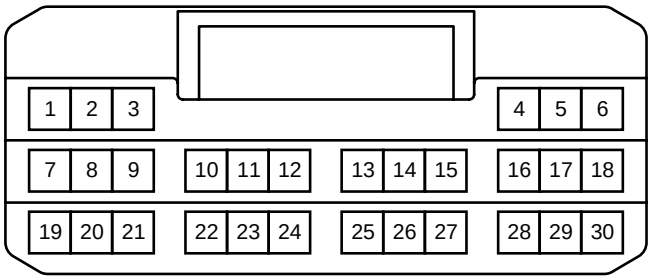

D42

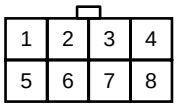

D43

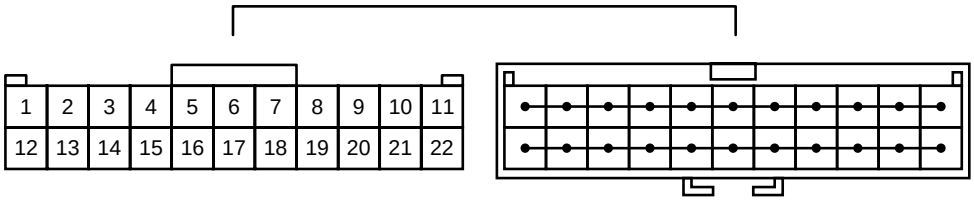

D44

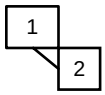

D45

D46
Black

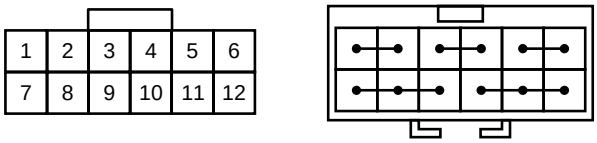

D47
Black

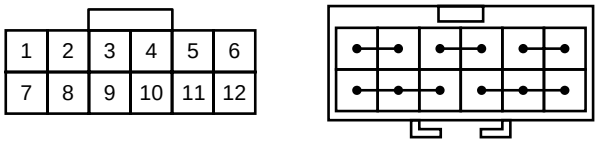

D48

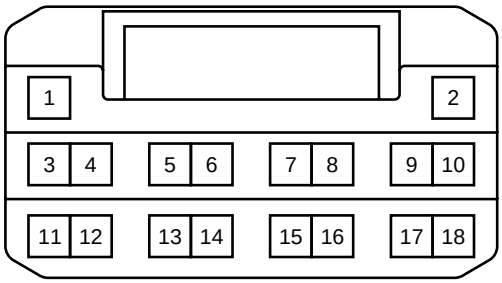

D50

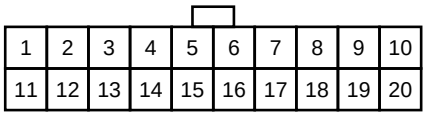

D51

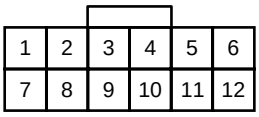

D52

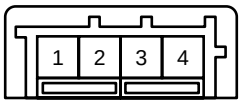

D53

D54
Black

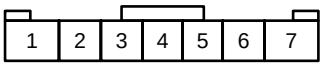

D55

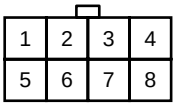

D56

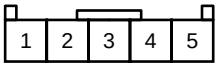

D57

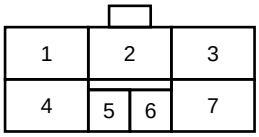

D58

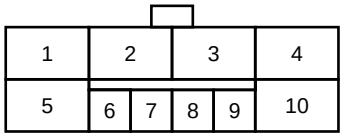

D59
Black

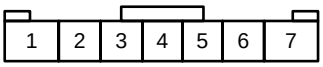

D60

D61

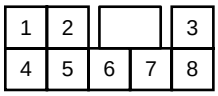

D62

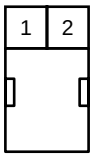

D63

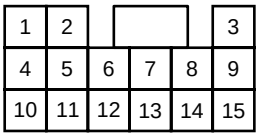

D64

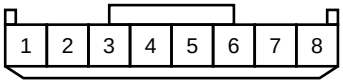

D66

D67

D68

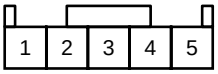

D69

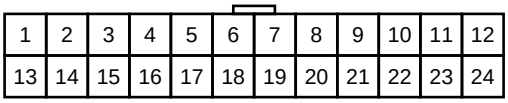

D70

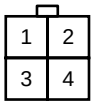

D74

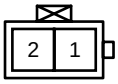

E1

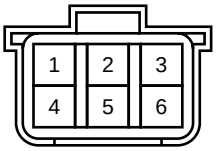

E2

E3

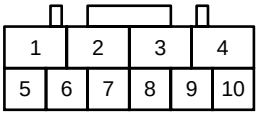

E4

E5

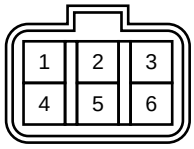

E6

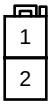

E7

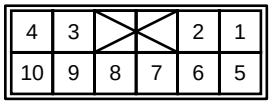

E8

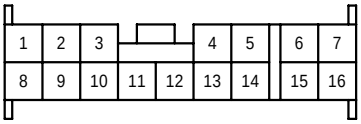

E9

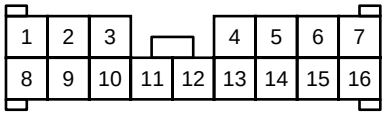

K CONNECTOR LIST

E10

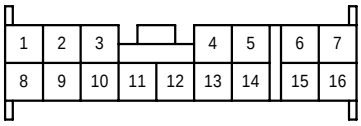

F1

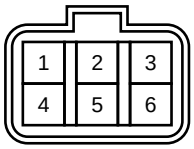

F2

F3

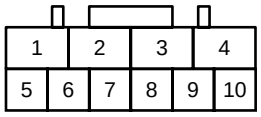

F4

F5

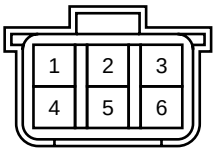

F6

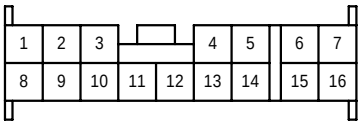

F7

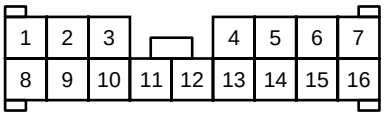

F8

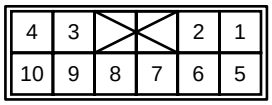

F9

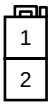

F10

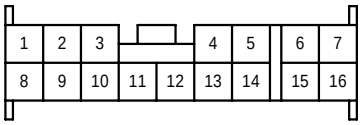

G1

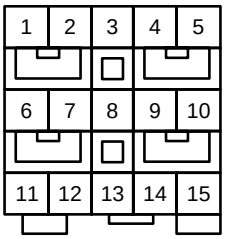

G3

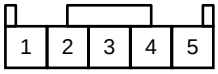

G4

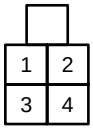

G6

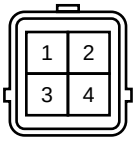

G7

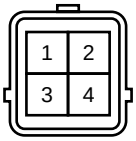

G9

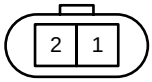

G10

G11

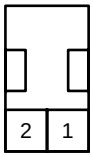

G12

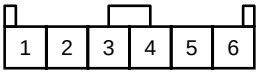

G13

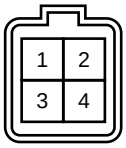

G14

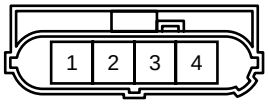

G15

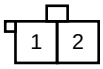

G16

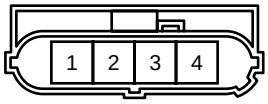

G17

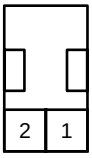

G18

H1

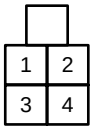

H2

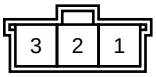

H3

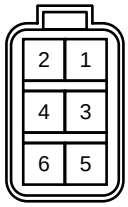

H6

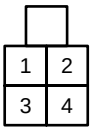

H8

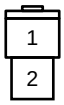

H9

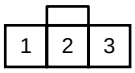

H10

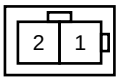

H11
Black

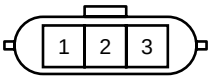

H12

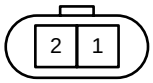

H15

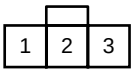

H16

H17

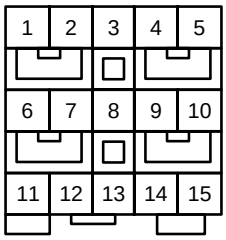

H18

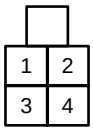

H19

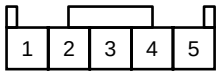

H21

H22

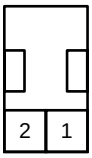

H23

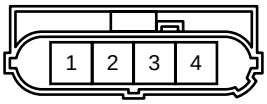

H24

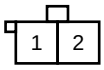

H25

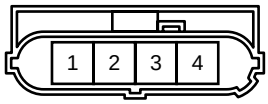

H26

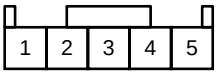

H27

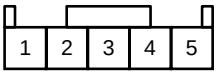

H29

H30

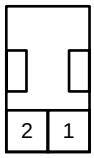

J1

J2

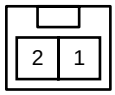

J3

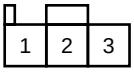

J4

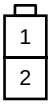

K1

K3

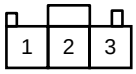

K5

L2
Gray

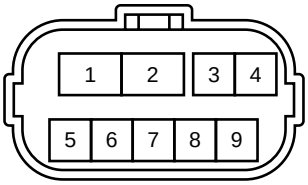

K CONNECTOR LIST

L3
Black

L4
Gray

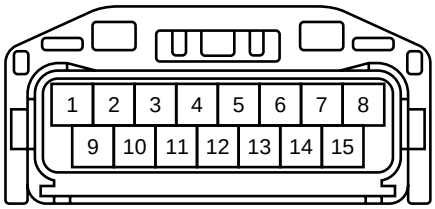

L5
Black

a1
Black

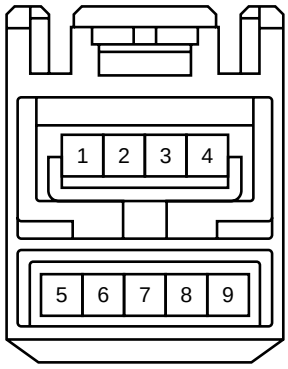

a2
Gray

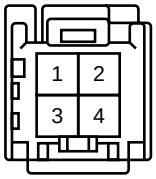

b1

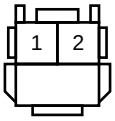

c1

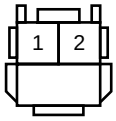

d1
Blue

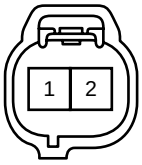

z1

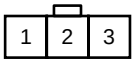

z2

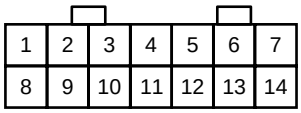

z4

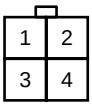

z5

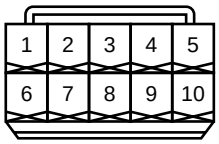

z6

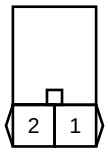

z8

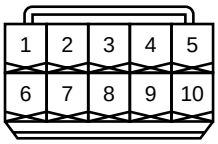

AB1

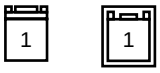

AC1

Black

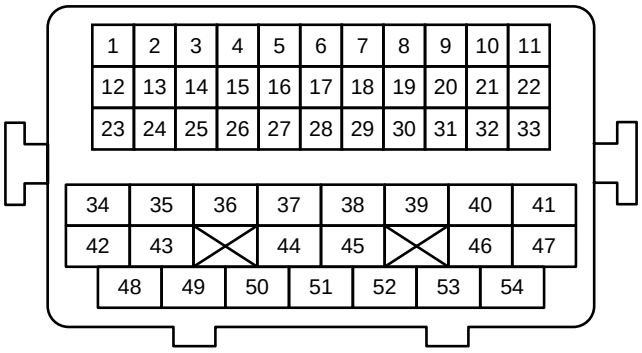

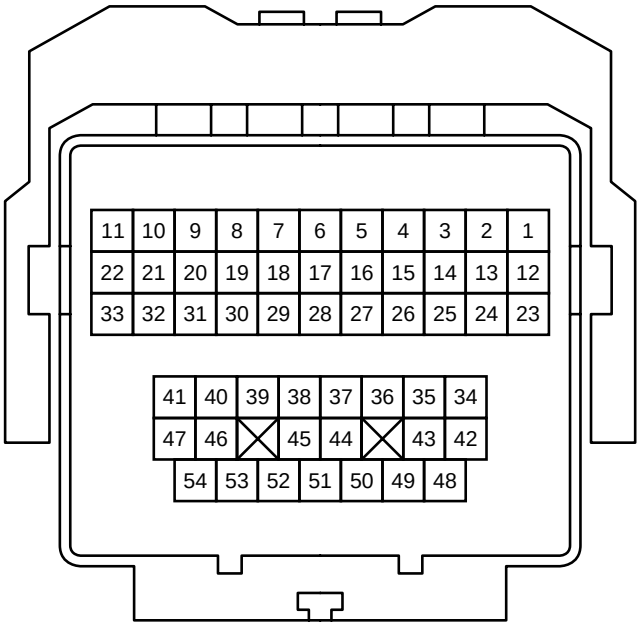

AC2

Gray

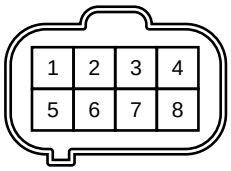

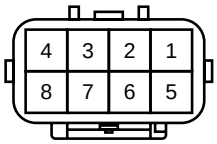

AD1

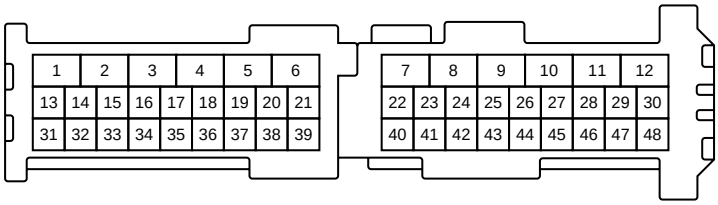

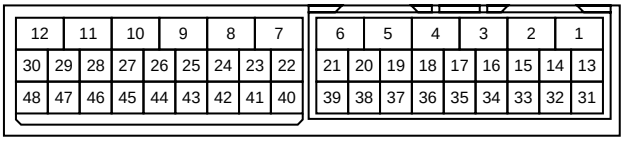

AD2

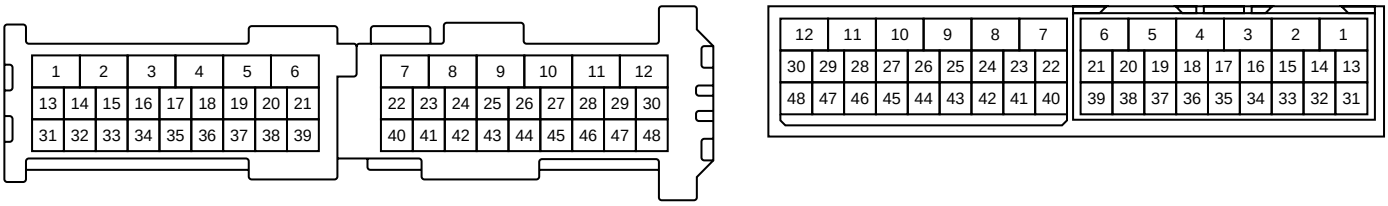

AD3

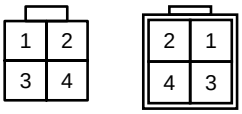

AL1

Black

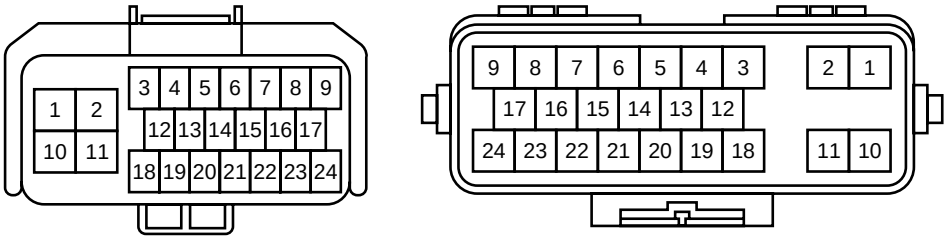

AL2

Gray

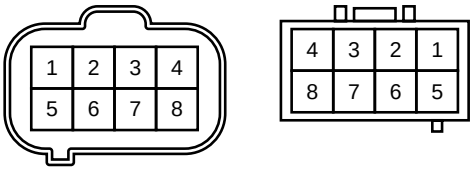

Cd1

Blue

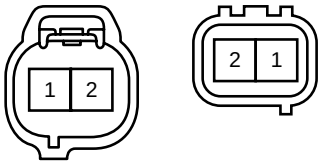

DA1

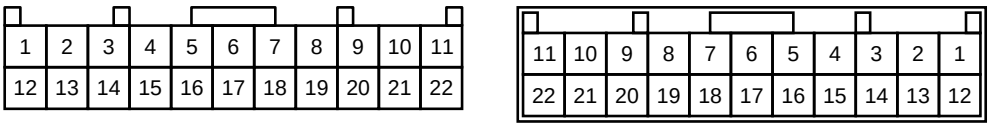

DA2

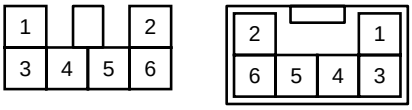

DA3

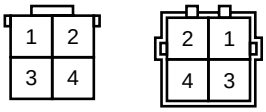

DK1

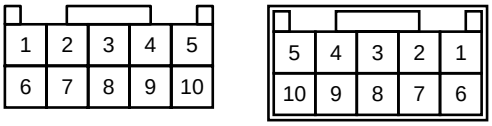

K CONNECTOR LIST

ED1

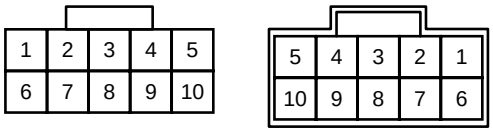

ED2

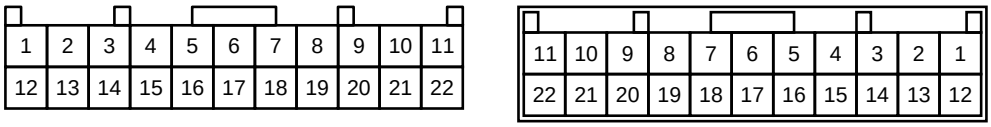

EH1

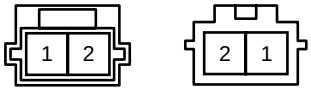

FD1

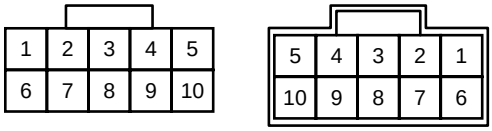

FD2

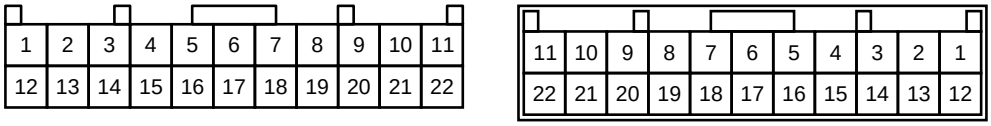

FG1

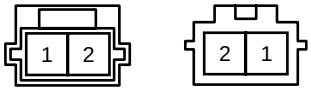

GD1

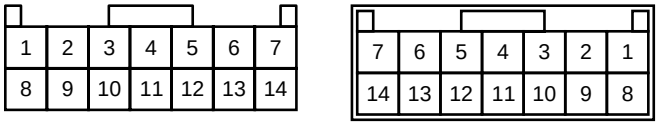

GD2

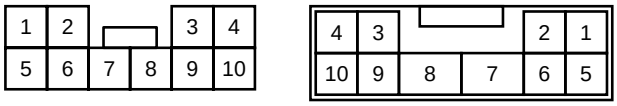

Gc1

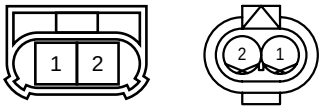

HD1

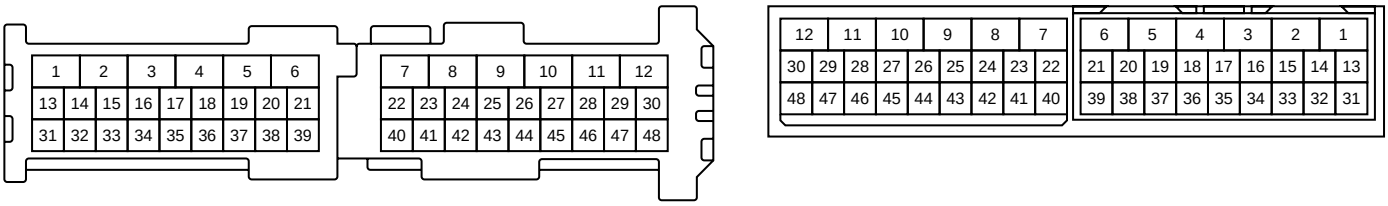

Hb1

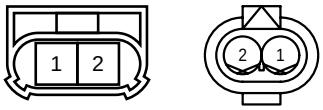

JH1

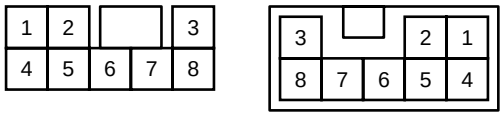
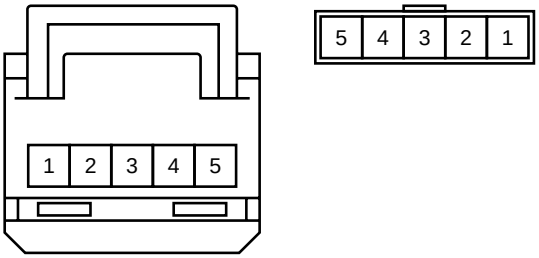
aD1